# Model 424 Test System

Operations Manual

Thermo KeyTek

Thermo KeyTek

# Model 424 Test System

## Operations Manual

## KPS-159 Revision A

Copyright 1988-2001 Thermo KeyTek
All Rights Reserved

Thermo KeyTek
One Lowell Research Center
Lowell, MA 01852-4345
Phone: 978-275-0800
Fax: 978-275-0850
E-mail: customer_service@thermokeytek.com

© Thermo KeyTek 1988-2001 All rights reserved

The copyright protection afforded to Thermo KeyTek includes all forms of media material and information including, without limitation, generated icons and logos etc. and all associated documentation. This operating manual and associated software contained within may not be duplicated in any way without the express permission of Thermo KeyTek.

Printable products of the software such as test reports and graphs, and associated files of the same, are the property of the purchaser and may be subject to their own copyright restrictions.

IBM is a registered trademark of International Business Machines Corporation. Microsoft Windows and MS-DOS are registered trademarks of Microsoft Corporation.

## Notice

In no event will Thermo KeyTek be liable for any damages, consequential, incidental or indirect (including loss of business profits, business interruption, loss of business information, and the like) arising out of use or inability to use the hardware or software supplied.

The author and publisher of the operating manual make no warranty of any kind, expressed or implied, with regard to the instructions and suggestions contained within. The author and publisher of this operating manual shall not be liable in any event of incidental or consequential damages in connection with, or arising out of, the furnishing, undertaking or use while following verbal or written instructions and suggestions in any interpretation of its contents.

Thermo KeyTek products undergo continuous development and the company reserves the right to change their specifications without obligation or prior notification.

**Thermo KeyTek One Lowell Research Center Lowell, MA 01852-4345 USA Tel: 978-275-0800**

**Fax: 978-275-0850 http://www.thermokeytek.com**

Digitized by the Internet Archive
in 2025

https://archive.org/details/manualsplus_10198

# Amendment History

| Issue | Date | Author | Amendment |
|---|---|---|---|
| March 1988 | | PR | unknown |
| Revision A | 3/2001 | JBC | Added amendment history page<br>Added copyright page<br>Added internal cover page<br>Removed TVL logo and other references<br>No changes to content of user information<br>ECO-010-01 |

## WARRANTY

KeyTek Instrument Corp. warrants each instrument manufactured by it to be free from defects in material and workmanship for a period of one year from the date of delivery to the original purchaser, provided the instrument is used in accordance with the instructions in this manual. KeyTek's obligation under this warranty is limited to servicing or adjusting an instrument returned to the factory, transportation charges prepaid, for that purpose. This is the only warranty offered in connection with the sale of this instrument, no other warranty is implied. KeyTek is not liable for consequential damages.

If a fault in operation occurs, the following steps should be taken:

1. Notify KeyTek Instrument Corp. giving full details of the faulty operation, the model number and serial number of the instrument. On receipt of this information, service data or shipping instructions will be provided.

2. On receipt of the shipping instructions, forward the instrument prepaid and repairs will be made at the factory.

If it is necessary to return this instrument to the factory, it should be shipped in the original packing carton. If it is not available, use any suitable rigid container with adequate packing to protect the unit during transit.



(pages ii through ix, following, omitted intentionally)

## Manual Format

Because of the inherently-expandable character of the Model 424 family of surge test instrumentation, certain pages and portions of pages have been left blank intentionally, and others have been purposely omitted. These sections and pages can be added later as new plug-in Programmer Networks and additional auxiliary instruments are introduced, for those installations employing them.

# Table of Contents


| | | page |
|---|---|---|
| Warranty | | i |
| Corrections to Operating and Service Manual | | ii |
| Effectivity of Changes | | vi |
| Manual Format | | x |
| Table of Contents | | xi |
| List of Illustrations | | xxi |
| Tables | | xxiv |
| 1. | GENERAL INFORMATION | 1-1 |
| 1.1 | Description | 1-1 |
| 1.2 | Options and Accessory Equipment | 1-2 |
| 1.2.1 | Programmer Networks | 1-2 |
| 1.2.2 | Model 210 Energy Storage Unit | 1-8 |
| 1.2.3 | Model 211 Energy Storage Unit | 1-8 |
| 1.2.4 | Programmable/Readout Option P | 1-8 |
| 1.2.5 | Model 450 Component Test Fixture | 1-10 |
| 1.2.6 | Model 480 Output Plug Array, Cable | 1-10 |
| 1.2.7 | Option S, Pre-Surge Scope Synch | 1-10A |
| 1.2.8 | Option I, 10A Current Monitor Range | 1-10A |
| 1.2.9 | Option K, Interlock Key Switch | 1-10B |
| 1.2.10 | Option LS, AC Line-Synchronize | 1-10B |
| 1.3 | Waveform Definitions | 1-10B |
| 1.4 | Specifications | 1-12 |
| 1.4.1 | Generator | 1-12 |
| 1.4.2 | Programmer Network Output Pulse Characteristics | 1-12 |
| 1.4.3 | Monitor | 1-18 |
| 1.4.4 | Interlock Systems | 1-19 |
| 1.4.5 | Physical Specifications | 1-20 |
| 1.5 | Programmable/Readout Option P | 1-21 |
| 1.5.1 | Specifications, Inputs | 1-21 |
| 1.5.2 | Specifications, Outputs | 1-22 |
| 1.5.3 | Packaging | 1-23 |
| 1.5.4 | Pin Connections and Loading | 1-24 |
| 1.6 | Option LS, AC Line-Synchronize | 1-27 |
| 2. | OPERATING INSTRUCTIONS | 2-1 |
| 2.1 | Power Requirements and Set-up; Different Line Voltages | 2-1 |
| 2.2 | Installation | 2-4 |
| 2.3 | Controls and Displays | 2-4 |
| 2.3.1 | Front Panel | 2-4 |
| 2.3.2 | Rear Panel | 2-10 |

2.4 General Operating Information and Sequence of Operations..... 2-11
2.4.1 General..... 2-11
2.4.2 Programmer Networks..... 2-11
2.4.3 Output Connections..... 2-11
2.4.4 Interlocks: Relation to Output Connections..... 2-14
2.4.5 Terminations: Which to Use with Each Programmer..... 2-16
2.5 Operation: Generating and Monitoring an Output..... 2-19
2.5.1 Preliminary..... 2-19
2.5.2 Operation..... 2-20
2.6 Measure Circuitry Input Impedance..... 2-25
2.7 Different Full-Scale Currents and/or Rates-of-Rise..... 2-25
2.8 Use of Line Voltage Regulators with the Model 424..... 2-26
2.9 Applications..... 2-26
2.9.1 Measuring High-Speed, High-Power Pulses: Grounds, Oscilloscopes, Baluns, Coax..... 2-27
2.9.2 Testing Gas-Tube Protectors: Typical Waveforms..... 2-34
2.9.3 Testing Varistors and Avalanche Protectors; Typical Waveforms..... 2-39
2.9.4 Testing RLC Surge-Suppression Networks, Passive Circuits, Systems 2-47
2.9.5 Testing Active Circuits and Systems 2-48
2.10 Peak Power and Energy..... 2-49
2.10.1 Peak Impulse Power, Available and Delivered..... 2-49
2.10.2 Impulse Energies..... 2-54

3. THEORY OF OPERATION..... 3-1
3.1 Introduction: System Block Diagram..... 3-1
3.2 High Voltage Generation, Storage and Switching..... 3-3
3.3 Charge and Pulse Control..... 3-5
3.3.1 Charge..... 3-9
3.3.2 Discharge..... 3-11
3.3.3 Simultaneous Charge (+)/Charge (-). 3-13
3.3.4 Pulse..... 3-14
3.4 Wave Shaping..... 3-17
3.4.1 Programmer Networks..... 3-18
3.4.2 Scaling and Metering..... 3-20

3.5 Peak Measurement and Display..... 3-21
3.5.1 Voltage Transducer..... 3-24
3.5.2 Current Transducer..... 3-25
3.5.3 Peak Detector..... 3-26
3.5.4 DC-to-Pulse-Width Converter..... 3-29
3.5.5 Counters/Latches/Decoders/Drivers.. 3-31
3.5.6 DC Reference..... 3-31
3.5.7 Clock..... 3-33
3.5.8 Control and Reset Logic..... 3-33
3.5.9 Go/No Go..... 3-35
3.6 Voltage Transducer and Range Switching: Circuit Ground..... 3-36
3.7 Current Transducer and Range Switching..... 3-38
3.8 Programmable/Readout Option P..... 3-41
3.8.1 Programming..... 3-41
3.8.2 Readouts..... 3-42
3.8.3 Special Unit Checkout..... 3-42

4. MAINTENANCE..... 4-1
4.1 Purpose..... 4-1
4.2 Test Equipment..... 4-1
4.3 Performance Tests..... 4-1
4.3.1 Front Panel Controls, Displays, Terminals..... 4-9
4.3.2 Interlock Tests..... 4-12
4.3.3 Charge (+) and Charge (-) Operation 4-13
4.3.4 Pulse Operation..... 4-15
4.3.5 Open-Circuit Voltage Tests..... 4-15
4.3.6 Open-Circuit Current Tests..... 4-16
4.3.7 Over/Under Range Tests..... 4-16
4.3.8 Short-Circuit Voltage and Current Tests..... 4-17
4.3.9 Peak Voltage Accuracy..... 4-19
4.3.10 Peak Current Accuracy..... 4-24
4.3.11 Voltage/Current Cross-Checks..... 4-24
4.3.12 Voltage Monitor..... 4-26
4.3.13 Current Monitor..... 4-26
4.3.14 Virtual Front Time (Not for Rate-of-Rise Waves)..... 4-26
4.3.15 Virtual Duration (not for Rate-of-Rise Waves)..... 4-28
4.3.16 Rate-of-Rise..... 4-28
4.3.17 Performance Check List..... 4-28
4.4 Calibration Procedure..... 4-38
4.4.1 Access to Adjustments..... 4-38
4.4.2 Surge Standards..... 4-40
4.4.3 6.8V Surge Standard..... 4-40
4.4.4 100V Surge Standard..... 4-41
4.4.5 800V Surge Standard..... 4-41

4.4.6 Gas-Tube Surge Standard..... 4-42
4.4.7 Connections for Surge Standards..... 4-43
4.4.8 Surge Standard Calibration..... 4-44
4.4.9 Calibration Using an Oscilloscope.... 4-45
4.4.10 Calibration Results Required..... 4-45
4.4.11 Corrections at 10 kV/usec..... 4-46
4.4.12 Use of Test Fixtures, Other Load Arrangements..... 4-47

4.5 Trouble Shooting..... 4-59
4.5.1 Procedure 1..... 4-69
4.5.2 Procedure 2..... 4-70

5. PROGRAMMER NETWORKS..... 5-1
5.1 PN 241..... 5-1
5.2 PN 242..... 5-1
5.3 PN 243..... 5-1
5.4 PN 244..... 5-2
5.5 PN 245..... 5-2
5.6 PN 246..... 5-2
5.7 PN 247..... 5-3
5.7A PN 247A..... 5-4
5.7A.1 Termination Model 489..... 5-4
5.7A.2 Current Monitoring..... 5-4
5.7A.2 Trimming for 2500A Full Scale..... 5-4
5.8 PN 248..... 5-6
5.9 PN 249..... 5-7
5.10 PH 250..... 5-7
5.11 PN 251..... 5-7
5.12 PN 252..... 5-7
5.13 PN 253..... 5-8
5.13.1 General Information..... 5-8
5.13.2 Specifications..... 5-8
5.13.2 Operating Instructions..... 5-9

5.14 PN 254..... 5-10

5.15 PN 255..... 5-10

5.21 PN 261..... 5-10
5.21.1 General Information..... 5-10
5.21.2 Specifications..... 5-11
5.21.3 Operating Instructions..... 5-12
5.21.4 Theory of Operation..... 5-17

5.41 PN 281..... 5-20
5.41.1 General Information..... 5-20
5.41.2 Specifications..... 5-21
5.41.3 Operating Instructions..... 5-23
5.41.4 Theory of Operation..... 5-27A
5.42 PN 282..... 5-29
5.42.1 General Information..... 5-29
5.42.2 Specifications..... 5-30
5.42.3 Operating Instructions..... 5-32
5.42.4 Theory of Operation..... 5-37
5.43 PN 283..... 5-39
5.43.1 General Information..... 5-39
5.43.2 Specifications..... 5-41
5.43.3 Operating Instructions..... 5-43
5.43.4 Theory of Operation..... 5-46

5.46 PN 286..... 5-70
5.46.1 General Information..... 5-70
5.46.2 Specifications..... 5-70
5.46.3 Operating Instructions..... 5-71
5.51 PN 291..... 5-101
5.51.1 General Information..... 5-101
5.51.2 Specifications..... 5-101
5.51.3 Operating Instructions..... 5-103

6. OPTIONS AND ACCESSORY EQUIPMENT..... 6-1
6.1 Model 450 Component Test Fixture..... 6-1
6.1.1 Description..... 6-1
6.1.2 Specifications..... 6-1
6.1.3 Operating Instructions..... 6-3
6.1.4 Theory of Operation..... 6-5
6.1.5 Calibration..... 6-5
6.2 Models 210 and 211 Energy Storage Units... 6-10
6.2.1 Description..... 6-10
6.2.2 Specifications..... 6-10
6.2.3 Operating Instructions..... 6-15
6.2.4 Theory of Operation..... 6-18

7. LIST OF REPLACEABLE PARTS..... 7-1
7.1 Recommended Major Assemblies for Service and Spares..... 7-2
7.2 List of Recommended Spare Parts -- Model 424..... 7-3

8. SCHEMATICS AND LOCATION DRAWINGS..... 8-1
8.1 Symbols and Notations..... 8-1
8.1.1 Units and Component Assumptions... 8-1
8.1.2 Trims and Test Points..... 8-1
8.1.3 Terminals and Connections..... 8-1
8.1.4 Drawings Supplied..... 8-2
8.2 Drawing Index..... 8-3

(pages xvix and xx, following, omitted intentionally)

## List of Illustrations


| Figure | | Page |
|---|---|---|
| 1-1 | Input Loading (Option P)..... | 1-25 |
| 1-2 | Output Drive (Option P)..... | 1-25 |
| 1-3 | Connector Pins and Coding; Cable Exit (Option P)..... | 1-25 |
| 1-4 | LS Option Displays: 0, 90, 180, 270, 360 Degrees..... | 1-33 |
| 2-1 | (AC Line Voltage Selection)..... | 2-2 |
| 2-2 | Front Panel Controls and Displays..... | 2-3 |
| 2-3 | Model 424 Rear Panel..... | 2-10 |
| 2-4(a) | Two-Terminal Output Connection (Not Recommended)..... | 2-12 |
| 2-4(b) | Four-Terminal Output Connection Preferred..... | 2-12 |
| 2-5 | External Interlock Connections..... | 2-17 |
| 2-6 | Standard Connections, Auxiliary Test Equipment (Satisfactory for Low Current Loads)..... | 2-18 |
| 2-7 | Preferred Connections, Auxiliary Test Equipment (High-Current Loads)..... | 2-18 |
| 2-8(a) | Explicitly-Wound Balun..... | 2-30 |
| 2-8(b) | Coaxer, or Coax Form of Balun..... | 2-30 |
| 2-9(a) | Coaxer in Line From Voltage Monitor Output to Oscilloscope..... | 2-32 |
| 2-9(b) | Coaxer in Oscilloscope Probe Cable..... | 2-32 |
| 2-10 | Determining Need for Coaxers..... | 2-33 |
| 2-11 | Typical Gas Tube Voltage and Current Waves, 1 kV/usec..... | 2-36 |
| 2-12 | Typical Gas Tube Voltage Waves at 0.1, 0.5, 5 and 10 kV/usec..... | 2-37 |
| 2-13 | Open-Circuit Rate-of-Rise Waves, 0.1 and 10 kV/usec..... | 2-38 |
| 2-14 | Surge-Driven Varistor..... | 2-41 |
| 2-15 | Varistor Voltage and Current Waves, 8 x 20 Waveform..... | 2-45 |
| 2-16 | Silicon Avalanche Device Device Voltage and Current Waves; 10 x 1000 and 8 x 20 Waves..... | 2-46 |

| | | |
|---|---|---|
| 3-1 | Block Diagram, Model 424 Surge Generator/Monitor..... | 3-2 |
| 3-2 | High-Voltage Generation, Storage and Switching..... | 3-4 |
| 3-3 | Block Diagram, Charge and Pulse Control Circuits..... | 3-6 |
| 3-4 | Simplified Schematic, Charge and Pulse Control Circuits..... | 3-8 |
| 3-5 | Charge/Discharge Timing..... | 3-12 |
| 3-6 | Simultaneous Charge+/Charge- Timing.... | 3-15 |
| 3-7 | Pulse Timing..... | 3-16 |
| 3-8 | Wave-Shaping Networks..... | 3-19 |
| 3-9 | Peak Monitors Block Diagram..... | 3-22 |
| 3-10 | Voltage Transducer..... | 3-25 |
| 3-11 | Current Transducer..... | 3-25 |
| 3-12 | Peak Detector..... | 3-27 |
| 3-13 | DC-to-Pulse-Width Converters..... | 3-30 |
| 3-14 | DC Reference..... | 3-32 |
| 3-15 | Voltage Transducer and Range Switching: Circuit Ground..... | 3-37 |
| 3-16 | Current Transducer and Range Switching. | 3-39 |

| | | |
|---|---|---|
| 4-1 | Output Short-Circuit Connections..... | 4-18 |
| 4-2 | Compensating the Oscilloscope Probe.... | 4-20 |
| 4-3 | DC-Calibrating the Scope/Input Amplifier/Probe Combination..... | 4-20 |
| 4-4 | Peak Voltage Accuracy Test, Open Circuit..... | 4-22 |
| 4-5 | Peak Voltage Accuracy Test, Protector Load..... | 4-22 |
| 4-6 | Peak Current Accuracy Test..... | 4-25 |
| 4-7 | Voltage/Current Cross-Check Test..... | 4-25 |
| 4-8 | Voltage Monitor Measurement..... | 4-27 |
| 4-9 | Current Monitor Measurement..... | 4-27 |
| 4-10 | Calibration Adjustment Locations..... | 4-39 |
| 4-11 | General Location Drawing..... | 4-60 |

| | | |
|---|---|---|
| 6-1 | Using the Model 450 Test Fixture..... | 6-6 |
| 6-2 | Testing Axial-Lead Components With the Model 450..... | 6-7 |
| 6-3 | Testing Radial-Lead Components With the Model 450..... | 6-7 |
| 6-4 | Energy Storage Units Models 210 and 211 | 6-19 |
| 6-5 | Model 424 Circuit Interlock System..... | 6-20 |

## Tables


| Number | | page |
|---|---|---|
| 1-1 | Output Pulse Characteristics..... | 1-13 |
| 1-2 | Scope Connections for LS Option Display | 1-31 |
| 1-3 | Scope Settings for LS Option Display... | 1-32 |
| 2-0 | **Terminations vs. Programmer Network....** | **2-16A** |
| 2-1 | Programmer Network Output Resistances.. | 2-42 |
| 2-2 | Programmer Network Characteristics..... | 2-50 |
| 2-3(a) | Peak Power Delivered to Protectors with Clamping Voltages from 10 to 100V (kilowatts)..... | 2-55<br>2-58<br>2-61 |
| 2-3(b) | Peak Power Delivered to Protectors with Clamping Voltages from 100 to 1000V (kilowatts)..... | 2-56<br>2-59<br>2-62 |
| 2-3(c) | Peak Power Delivered to Protectors with Clamping Voltages from 1000V up (kilowatts)..... | 2-57<br>2-60<br>2-63 |
| 2-4 | Energy Delivered to Load Resistors..... | 2-66 |
| 2-5(a) | Energy Delivered to Protectors with Clamping or Sustaining Voltages from 10 to 100V (joules)..... | 2-71<br>2-74<br>2-77<br>2-80 |
| 2-5(b) | Energy Delivered to Protectors with Clamping or Sustaining Voltages from 100 to 1000V (joules)..... | 2-72<br>2-75<br>2-78<br>2-81 |
| 2-5(c) | Energy Delivered to Protectors with Clamping or Sustaining Voltages Equal to or Greater than 1000V (joules)..... | 2-73<br>2-76<br>2-79<br>2-82 |

| | | |
|---|---|---|
| 4-1 | List of Equipment to Inspect and Calibrate KeyTek Model 424 Surge Generator/Monitor..... | 4-2 |
| 4-2 | List of Optional Additional Equipment to Use, Inspect and Calibrate KeyTek Model 424 Surge Generator/Monitor..... | 4-7 |
| 4-3 | Performance Check List..... | 4-29 |
| 4-4 | Preferred Calibration Procedure..... | 4-48 |
| 4-4A | Alternate Steps for Calibration Procedure..... | 4-54 |
| 4-5 | Trouble-Shooting Chart..... | 4-61 |

This page left blank intentionally.

SECTION 1

# 1. General Information

## 1.1 Description

The Model 424 is a versatile Surge Generator/Monitor combination delivering short-duration, single-shot pulses of either polarity at open-circuit voltages to 6000 volts, short-circuit currents to 2000 amperes and peak power levels to 750 kilowatts. Stored energy in the basic Model 424 is 80 joules; with Model 210 and 211 auxiliary Energy Storage Units, 630 joules. Metering includes prior display of peak open circuit voltage to be supplied during the delivered pulse. The instrument also provides fully self-contained determinations of resulting peak voltage to which the load is clamped, as well as actual peak load current.

Results of the peak voltage and current measurements are stored and displayed simultaneously -- for the same pulse -- in digital form: for engineering and QC applications, and for production set-up. In addition, go/no go calculations and displays are included, referred to operator-set digital switch settings. These built-in go/no go monitors allow production testing at pre-selected pass/fail levels. For voltage, the level corresponds with maximum allowable clamping voltage of the protector under test -- either by itself, or operating within the functioning circuit assembly it is protecting. For current, the selected level corresponds with the minimum current at which the protector test is considered meaningful, thereby insuring integrity of external connections.

Developed primarily for simulating induced lightning and power line surges, the instrument's selectable pulse characteristics and monitoring capabilities make it suitable for a variety of applications requiring short pulses with controlled, delivered peak power to over 750kW.

A number of widely different, selectable pulse (rise-time) x (decay time) combinations are provided via optional plug-in Programmer Networks. These afford flexibility in simulating surge conditions for telecommunications, power, and auxiliary line situations such as burglar and fire loops, automatic sprinklers and other dedicated lines. Also available are rate-of-rise waves from 100V/usec to 10kV/usec, all-important in testing gas tube breakdown protectors and carbon block arresters.

High-frequency ac ringing waves -- with peaks that decay exponentially -- furnish simulation of some common ac line transients. Some Programmer Networks, of both impulse

and oscillatory types, are supplied with built-in, isolated ac line-coupling networks and filters.

Small device or equipment degradations on repeated surges, reflected as arrester peak voltages that increase or decrease with successive surge applications, are readily measured with the self-contained voltage and current peak-reading digital meters. They make the Model 424 a complete surge generating and measuring system, eliminating the need to tie up auxiliary test equipment for making accurate single-shot peak measurements for both impulse and oscillatory surges.

## 1.2 Options and Accessory Equipment

### 1.2.1 Programmer Networks (for terminology, see section 1.3)

The Model 424 operates with a variety of different plug-in Programmer Networks. Independent of those supplied initially with the Model 424 mainframe, additional Programmer Networks may be obtained to provide different waveshapes. These include but are not limited to:

1. PN 241: 10 x 1000 and 1 kV/usec waveshapes: peak open-circuit voltage to 1500V, peak short-circuit current to 60A and 15A in two ranges.

2. PN 242: 8 x 20 waveshape, peak open-circuit voltage to 1000V. Five ranges of peak short-circuit current are provided: 20, 50, 100, 200 and 500A.

3. PN 243: 1.2 x 50 waveshape, peak open-circuit voltage to 1500V. Five ranges of peak short-circuit current are provided: 20, 50, 100, 200 and 500.

4. PN 244: 10 x 50 waveshape, peak open-circuit voltage to 1000V. Five ranges of peak short-circuit current are provided: 20, 50, 100, 200 and 500.

5. PN 245: Replacement and special order only: same as PN 246 except rates-of-rise are 0.5, 1, 2, 5 and 10 kV/usec; short-circuit current is 40A.

6. PN 246: Linear-rise waveshapes. For use in testing rate-of-rise response, on gas tubes and other protectors. Five rates-of-rise

are provided: 0.1, 0.5, 1, 5 and 10 kV/usec. Overshoot peak voltages are typically 1800V for 1.5kV open-circuit ("plateau") settings; and the waves are linear within ±10% to 1000-1200V. Short-circuit current is 50A.

7. PN 247: 8 x 20 short-circuit current, 4 x 40 open-circuit voltage waveshapes. Peak open-circuit voltage to 1500V, peak short-circuit current to 2000A.

8. PN 248: $<\overline{10}$ x $>160$ and $<\overline{10}$ x $>560$ waveshapes. For $<\overline{10}$ x $>160$, peak open-circuit voltage to 1500V and peak open-circuit current to 200A; for $<\overline{10}$ x $>560$, peak short-circuit current to 100A.*

9. PN 249: 4 x 200 waveshape; peak open-circuit voltage to 800V, peak short-circuit current to 1500A and 500A in two ranges. (Requires KeyTek auxiliary Energy Storage Unit Model 210.)

10. PN 250: 10 x 1000 and 1 kV/usec waveshapes; peak open-circuit voltage to 1500V, peak short-circuit current to 250A and 100A in two ranges. (Requires KeyTek auxiliary Energy Storage Unit Model 210.)

11. PN 251: 10 x 1000 short-circuit current, to 500A. 1 kV/usec peak open-circuit voltage waveshape, with plateau to 1500V with about 25% overshoot beyond. (Requires both KeyTek auxiliary Storage Units, Models 210 and 211.)

12. PN 252: "10" x 1000 and "100" x 1000 open-circuit voltage waves, where the "10" and the "100" are 10-90% rise times rather than virtual front durations. Corresponding short-circuit current waves are "16" x 600 and "40" x 800 respectively.

13. PN 253: 100 kV/usec ramp, with variable duration waves. Overshoot peak voltages are typically 2 kV for 1.5 kV open-circuit ("plateau") settings. Selectable open-circuit voltage durations are 20, 50, 100, 500 and 1000

* $\overline{10}$ means time to crest rather than virtual front duration.

usec; corresponding short-circuit current durations are 20, 40, 60, 240 and 320 usec respectively.

This space left blank intentionally.

21. PN 261: Oscillatory or "ring" wave, whose successive peaks decay exponentially. Initial peak to 6kV with 0.5 usec rise time (essentially 10 kV/usec). Ringing frequency 100 kHz, each peak 40% lower than the previous one. Output impedance 50 ohms in parallel with 50 uH, short-circuit current peak, 200 A.
The PN 261 is provided with a completely ungrounded, floating output. Nonetheless, peak output voltage and current are monitored by the grounded Model 424 monitoring and display circuits via isolated measuring circuits in the PN 261.

41. PN 281: Same as PN 261, except the PN 281 incorporates complete ac-line-driving capability for normal-mode surging. An auxiliary ac-line input is provided, for 10A continuous, 15A intermittent duty at 115V or 230V.

Isolation from the Model 424 ground for this ac line, "passive" surging without line power, and isolated couplings which permit V and I monitoring on the Model 424 are all the same as for the PN 282 described below under (42).

42. PN 282: $< \bar{2}$ x $>10$ waveshape, peak open-circuit voltage to 2500V, peak short-circuit current to 1000A.*

The PN 282 incorporates complete ac-line-driving capability for normal-mode surging. An auxiliary ac-line input is provided, for 10A continuous, 15A intermittent duty at 115V or 230V.

* $\bar{2}$ means time to crest rather than virtual front duration.

This line can be totally unrelated to the Model 424 ground -- that is, the surge output is isolated from Model 424 ground. The PN 282 incorporates an isolation filter to prevent significant surge voltages from being fed to this input line.

An ac receptacle is also provided in the PN 282, for connection of the line output to the device to be surged. If the PN 282 input line isn't connected, or if the input line breaker on the PN 282 front panel isn't on, the device can be surged "passively" as well -- without line power applied. This feature also facilitates common mode, three-phase and other surge programs via auxiliary external couplings and filters.

The PN 282 incorporates isolated couplings to the Model 424 monitoring and display circuits for both peak voltage and peak current.

43. PN 283: 5 kV/usec and 2 kV/usec linear ramps, to 5 kV peak. Delivered to high-power SCR's (rated to 5 kV, 2 kA) as linear waves, in spite of extremely non-linear characteristics of the SCR's as loads.

Peak voltage and current measurements, which exclude the RLC shaping network currents -- i.e., measuring actual SCR parameters -- are displayed on the Model 424 in normal fashion (10 kV range).

46. PN 286: Same as PN 246, except ramps linear to 2.5 kV at 100 V/usec, to 3 kV at 500 V/usec, 1, 5 and 10 kV/usec. For maximum resolution and accuracy, designed to read 1/2 of output, on the 1 kV range; doubling the readings gives actual output peaks.

51. PN 291: ~10 x 1000 current waveshapes, with full-range short-circuit currents selectable as 1, 5, 10, 30, 100 and 300 A. Designed primarily for carbon-block arrester testing. Slope of voltage leading edge is 100-120 V/usec at 700V with 1200V peak open-circuit voltage, again traditional for testing carbons. Requires both Models 210 and 211 Energy Storage Units, but pulse repetition rate is still as high as 4/minute.

Other Programmer Networks: Additional Programmer Networks are available on special order for other waveshapes. Consult factory for further details.

### 1.2.2 Model 210 Energy Storage Unit

The Model 424 stores up to 78.75 joules internally, and this full stored energy is used in the PN 241 (60A mode), PN 243, PN 244, PN 248 and so on. (Others use a fraction of this stored energy -- specifically 28.1 joules. They include the PN 242, PN 245, PN 246, PN 247, PN 261 and PN 282.)

However, for some applications still higher stored energies are required. The auxiliary, KeyTek Model 210 Energy Storage Unit, when used with the Model 424, brings total stored energy to 315 joules (via a total of 280 ufd combined capacitance). This higher energy is used in the PN 249, PN 250 and other Programmers.

The Model 210 incorporates high-energy abort discharge capability for the additional capacitors in both the Model 210 and the Model 211 (section 1.2.3 following).

### 1.2.3 Model 211 Energy Storage Unit

When still higher energies are needed, as for the PN 251 Programmer (supplying a 10x1000 short-circuit current wave at 500A), the auxiliary Model 211 is added to the Models 424 and 210. It brings the combined stored energy to 630 joules with a total capacitance of 560 ufd.

### 1.2.4 Programmable/Readout Option P

When supplied, this option is incorporated wholly within the basic Model 424 housing. It provides controller, mini-computer or time-share-terminal access to both Charge and Pulse operations, and allows external parallel BCD read-out of delivered Model 424 peak output voltage, as clamped by the protector or circuit load. Data Valid, Cycle Complete and other input/output control signals provide flexibility of operation for different applications.

See section 1.5 for further details.

Addendum II to Option P Operating Instructions

A modification has been added to the Model 424 to provide BCD outputs for resulting clamped peak current as well as voltage.

To select current BCD outputs, bring CURRENT SELECT line low. Let CURRENT SELECT go open or high for voltage BCD outputs.

The Programmable/Readout Option P pages in the manual have been updated to incorporate all changes made to the Model 424 to add this new feature.

Current BCD outputs are available ONLY with the following revision Current and Voltage boards:

Current Assembly 42-413-000-00 Rev D and above

Voltage Assembly 42-415-000-00 Rev F and above

This page left blank intentionally.

### 1.2.5 Model 450 Component Test Fixture

While the Model 424 is applicable both to component testing and to testing of completed circuits and systems, it is often components for which relatively high volume production and QC applications exist. To assist in these areas, the KeyTek Model 450 Component Test Fixture provides safe, fast, zero component insertion force Kelvin test capability for use in testing components at high peak currents and voltages. Designed specifically for use with the KeyTek Model 424 Surge Generator/Monitor, the Model 450 is particularly well suited to surge and impulse test waveforms, as applied to protectors with either axial or radial leads.

A plastic cover with see-through window provides safety, via interlock to the Model 424 or other test instrumentation. In addition, closing the cover automatically makes connections to the device under test. Input connections are hard-wired to a multi-pin plug array, for fully-compatible mating with the KeyTek Model 424 Output and Measure terminals and Interlock Jack.

Option SD for the Model 450 provides for semi-dark operation, to permit testing components which exhibit light sensitivity.

### 1.2.6 Model 480 Output Plug Array and Cable

A multi-pin plug array, similar to that which terminates the Model 450 Component Test Adapter cable for safe, fully-compatible mating with the Model 424 Output and Measure terminals, as well as the Interlock Jack. It is supplied with a three foot (connector end to connector end) cable. The four Output/Measure connections (on two separate coax lines) are terminated in a pair of 5-way binding posts, where Out and Measure Hi and Lo are connected respectively, on a small terminal box at the end of the cable. Chassis ground and the two Interlock leads, also brought to the end of the cable, are left unterminated for user application.

### 1.2.7 Option S, Pre-Surge Scope Synch

A pre-surge synch pulse is available from the Model 424 rear panel when Option S is supplied. It is furnished via an ungrounded-shell coax connector, marked "Scope Synch",

The signal it supplies is +5 to +8 volts, and is positive-going independent of the Model 424 output surge polarity. The leading edge occurs 25 to 250 nsec prior to the output surge, depending on the virtual front duration of the surge being delivered to the load. Synch output impedance is 50 ohms. While no termination is required at the oscilloscope, one may be used for optimum leading edge characteristics.

Synch pulse duration is 5 to 25 microseconds, as a function of the delivered Model 424 output surge, and recent history of delivered surge polarity. The trailing edge may have a number of transitions, hence if the Synch pulse is to be used for counting, it should be buffered by a one-shot multivibrator with duration greater than about 50 microseconds.

For best results, use the coas lead supplied with the Synch option, including the in-line balun, to preserve rise time while isolating grounds to minimize waveform anomalies.

### 1.2.8 Option I, 10A Current Monitor Range

The basic Model 424 Surge Generator/Monitor includes two Current Monitor current ranges: 100A and 1000A. Each over-ranges by 1.5:1, hence the displays are linear to over 150A and 1500A respectively. Selection between the two ranges is made automatically within the Programmer Network being used; for Programmer Network maximum output current selections up to 150A, the 100A ranges is selected; above that, the 1500A range. The selected range is indicated by one of the Current Monitor Range lights on the front panel, to the right of the Peak Current digital readout. However, resolution is 1A on both ranges, since 0.1A resolution on the 100A range might be misleading.

Option I adds a 10A range, over-ranging to 15A, and useable by those Programmer Networks which have maximum output current selections of 15A and below. (These include one range on the PN 241, three on the PN 291 and a number on the Model 501 Surge Extender Pulse Forming Networks.) Again, selection of the 10A range, when supplied, is made automatically by the Programmer Network, except for special Programmers which include switched Current Monitor Range Selection. Resolution of the 10A range is 0.1A.

The 10A range supplied via Option I is highly desirable for measurements below about 8 to 10 amperes; since a peak-detector is involved, and such devices don't function with optimum accuracy below 8 to 10% of full scale. Within the Model 424, in fact, care is taken to include a "null band" near zero for both Voltage and Current peak detectors, amounting to 2-3%, to prevent triggering on the noise generated by high-energy discharges within the unit when pulsing. Thus Option I is useful to currents down to well below an ampere.

For later models with Option I, a bat-handle switch on pertinent Programmers selects Current Monitor range. This selection is independent of the push-button full-scale current switch also located on the Programmer panel. As indicated adjacent to the Current Monitor range selector, if measured current is over about 150% of full range, the display blanks to prevent erroneous readings. NOTE: it is also recommended that for measured currents less than about 10% of full selected range, the Current Monitor range selector be switched down-range--i.e. from 1 KA to 100 A, or from 100 A to 10 A--as appropriate; otherwise errors in readings will result as indicated above, in the paragraph describing peak detector operation.

### 1.2.9 Option K, Interlock Key Switch

Option K supplies a rear-panel, key-operated interlock switch, to permit shutting down all Model 424 and auxiliary equipment surge generation by unauthorized personnel.

### 1.2.10 Option LS, AC Line-Synchronize

Option LS adds capability for synchronizing the Model 424 output surge with the ac line, at any operator-selected line phase angle. The option is available for selected Programmer Networks, in which it is housed. These include the PN 281 and PN 282. (See Section 1.6 for further details.)

## 1.3 Waveform Definitions

The field of surge/impulse testing employs waveform definitions different from terminology common in much of the electronics industry. Reasons for this have to do with the applications to be served, coupled with the difficulty of generating and observing waveforms at the speed and energy levels involved. For example, gas tube protectors must be tested with wave fronts up to and beyond 10 kV/usec; implying controlled, clean, linear rates-of-rise at rates of 10 volts per nanosecond. Often these and other impulse test waves are generated by gas discharge and other devices which switch power levels of tens or hundreds of kilowatts in a few nanoseconds. Determining the start of these waves can often be extremely difficult, even with the most modern test instrumentation; and was virtually impossible during early stages of the surge test technology.

Accordingly, impulse waveform definitions were developed which make sense in connection with the applications involved. An abbreviated summary follows, with examples:

1. 10 x 1000 means a virtual duration of the wave front of 10 microseconds, and a 1000 microsecond duration from virtual zero until decay to 1/2 crest value. As defined by ANSI Standard C62.1-1971, the virtual front duration is 1.67 x the time for the voltage to increase from 30 to 90% of crest, or 1.25 x the time for the current to increase from 10 to 90% of crest. Virtual zero is defined as the intersection with the zero axis of a straight line drawn through points on the front of the voltage wave at 30 and 90% of crest, or through points on the front of the current wave at 10 and 90% of crest.

2. 10 kV/usec means the virtual rate-of-rise, defined as the slope of the line that determines the virtual zero; except for linear waves, it may be taken as the slope of the unloaded line between 30 and 120% of protector clamping or breakover voltage.

3. In some newer specifications, time to crest (from initial wave zero) is specified instead of virtual front duration. This sounds easier to measure, but determination of actual crest position is difficult since it is so broad a peak compared to the front of the wave. (For reference purposes, virtual front time usually works out to be on the order of 30 to 50% of time to crest.)

   Note: Virtual front time, and not time to crest, is conventional; and is used throughout this manual unless otherwise specifically indicated (as for the PN 248 and PN 282, for example).

4. Some waves are specified as requiring less than some virtual front time or time to crest, and greater than some decay time. In this manual, such waves are designated $<$A x $>$B; for example $<$10 x $>$160 and $<$10 x $>$560 for the waves generated via the PN 248 Programmer Network; where the first figures in each case happen to represent time to crest for the specific Programmers. (PN 282 is a similar instance.)

For oscillatory waves, definitions are less traditional, therefore less consistent. Generally specified are ringing frequency, leading edge risetime and nominal or minimum % decay per peak or per cycle.

## 1.4 Specifications

### 1.4.1 Generator

OUTPUT - single-shot pulse.

ACTUATION - dual-switch system:
CHARGE establishes internal potential;
PULSE applies stored potential to output via pulse-forming network.

PULSE REPETITION RATE - 6/minute, maximum; 2/minute maximum with Model 210 auxiliary Energy Storage Unit, 1/minute maximum with Models 210 and 211 auxiliary Energy Storage Units.

POLARITY - positive or negative.

STORED ENERGY - automatically selected by Programmer Network
Model 424 alone: 28.1 or 78.8 joules,
With Model 210 as well: 315 joules,
With both Models 210 and 211: 630 joules.

WAVESHAPES, IMPULSE: OPEN-CIRCUIT VOLTAGE AND SHORT-CIRCUIT CURRENT -
Exponential or linear rise, depending on Programmer
Exponential decay
$te^{-at}$ form for 8 x 20 (PN 242, PN 247)

WAVESHAPES, OSCILLATORY and OTHER -
See applicable specifications on specific Programmer Networks.

ACCURACY -

Pulse virtual front durations:

| | | |
|---|---|---|
| $>$ | 4uS | ±10% |
| $\leq$ | 4uS | ±30% |

All other pulse durations: ±20%

### 1.4.2 Programmer Network Output Pulse Characteristics

Table 1-1, following, lists pulse characteristics for a wide range of presently-available Programmer Networks.

TABLE 1-1

OUTPUT PULSE CHARACTERISTICS

| PROGRAMMER NETWORK | | ENERGY (joules) | | PEAK POWER (kilowatts) | VOLTAGE (open-circuit) | | CURRENT (short-circuit) | |
|---|---|---|---|---|---|---|---|---|
| Model | Mode | Stored | Max. Out | Max. Out | Peak or Plateau | Waveshape | Peak | Waveshape |
| PN 241 | 1 | 80 | 24. | 23. | 0-1.5 kV | 1 kV/usec* | 60 A | 10 x 1000 |
| | 2 | | 3.4 | 5.6 | 0-1.5 kV | 10 x 1000 | 15 A | 10 x 1000 |
| PN 242 | 1 | 30 | 1.3 | 125. | 0-1 kV | 8 x 20 | 500 A | 8 x 20 |
| | 2 | | .5 | 50. | | | 200 A | |
| | 3 | | .3 | 25. | | | 100 A | |
| | 4 | | .1 | 13. | | | 50 A | |
| | 5 | | .05 | 5. | | | 20 A | |
| PN 243 | 1 | 80 | 4.5 | 188. | 0-1.5 kV | 1.2 x 50 | 500 A | < 2 x 50 |
| | 2 | | 2.0 | 75. | | | 200 A | |
| | 3 | | 1.0 | 38. | | | 100 A | |
| | 4 | | .5 | 19. | | | 50 A | |
| | 5 | | .2 | 7.5 | | | 20 A | |
| PN 244 | 1 | 80 | 1.8 | 125. | 0-1 kV | 10 x 50 | 500 A | 10 x 50 |
| | 2 | | .7 | 50. | | | 200 A | |
| | 3 | | .3 | 25. | | | 100 A | |
| | 4 | | .1 | 13. | | | 50 A | |
| | 5 | | .07 | 5. | | | 20 A | |
| PN 245 | 1 | 30 | 4.8 | 15. | 0-1.5 kV | 10 kV/usec* | 40 A | exponential rise, exponential decay (300 usec) |
| | 2 | | | | | 5 kV/usec* | | |
| | 3 | | | | | 2 kV/usec* | | |
| | 4 | | | | | 1 kV/usec* | | |
| | 5 | | | | | .5 kV/usec* | | |

*Underdamped step with linear rise to about 80% of peak open-circuit ("plateau") setting. Overshoots by about 25% of "plateau" setting. Exponential decay -- approx. 7500 usec PN 241, 900 usec PN 245.

TABLE 1-1 (con't)

OUTPUT PULSE CHARACTERISTICS

| PROGRAMMER NETWORK | | ENERGY (joules) | | PEAK POWER (kilowatts) | VOLTAGE (open-circuit) | | CURRENT (short-circuit) | |
|---|---|---|---|---|---|---|---|---|
| Model | Mode | Stored | Max. Out | Max. Out | Peak or Plateau | Waveshape | Peak | Waveshape |
| PN 246 | 1 | 28 | 5.4 | 19. | 0-1.5 kV | 10 kV/usec* | 50 A | exponential rise, exponential decay (300 usec) |
| | 2 | 30 | | | | 5 kV/usec* | | |
| | 3 | | | | | 1 kV/usec* | | |
| | 4 | | | | | .5 kV/usec* | | |
| | 5 | | | | | .1 kV/usec* | | |
| PN 247 | | 30 | 11. | 750. | 0-1.5 kV | < 4 x 40 | 2000 A | 8 x 20 |
| PN 248** | 1 | 80 | 11. | 75. | 0-1.5 kV | $<\overline{10}$ x >160 | 200 A | $<\overline{10}$ x >160 |
| | 2 | | 14. | 20. | 0-800 V | $<\overline{10}$ x >560 | 100 A | $<\overline{10}$ x >560 |
| PN 249+ | 1 | 315 | 43. | 302. | 0-800 V | 4-5 x 200 | 1500 A | 6 x 160 |
| | 2 | | 16. | 100. | | | 500 A | |
| PN 250+ | 1 | 315 | 109. | 94. | 0-1.5 kV | 1 kV/usec* | 250 A | 10 x 1000 |
| | 2 | | 22. | 25. | 0-1 kV | 10 x 1000 | 100 A | 10 x 1000 |
| PN 251++ | | 630 | 200. | 188. | 0-1.5 kV | 1 kV/usec* | 500 A | 10 x 1000 |

+Requires Model 210 Energy Storage Unit. Due to parasitic impedances, 249 may have "flat top" for ~40 microseconds before starting the exponential decay. Surge rate, 2/minute.

++Requires Models 210 and 211 Energy Storage Units. Surge rate, 1/minute.

*Underdamped step with linear rise to about 80% of peak open-circuit ("plateau") setting. Overshoots by about 25% of "plateau" setting. Exponential decay -- approx. 900 usec PN 246, 10 msec PN 250, 7 msec PN 251.

**Actual specifications are on time to crest rather than virtual front time (see section 1.3). This is indicated by $\overline{A}$ x B rather than A x B.

TABLE 1-1 (con't)

OUTPUT PULSE CHARACTERISTICS

| PROGRAMMER NETWORK | | ENERGY (joules) | | PEAK POWER (kilowatts) | VOLTAGE (open-circuit) | | CURRENT (short-circuit) | |
|---|---|---|---|---|---|---|---|---|
| Model | Mode | Stored | Max. Out | Max. Out | Peak or Plateau | Waveshape | Peak | Waveshape |
| PN 252 | 1 | 80 | | 11. | 0-1 kV | "10" x 1000* | 45A | "15" x 600* |
| | 2 | 80 | | 11. | 0-1 kV | "100" x 1000* | 45A | "60" x 800* |
| PN 253 | 1 | 80 | 16 | 56. | 0-1.5kV | 100 kV/usec, all 5 modes: duration - 1000 usec | 150A | <1 x 320 |
| | 2 | 80 | 11 | | | 500 usec | | <1 x 240 |
| | 3 | 30 | 2.5 | | | 100 usec | | <1 x 60 |
| | 4 | 30 | 1.4 | | | 50 usec | | <1 x 40 |
| | 5 | 30 | .6 | | | 20 usec | | <1 x 20 |

* "A" x B means "A" is 10-90% risetime, rather than virtual front duration.

TABLE 1-1 (con't)

OUTPUT PULSE CHARACTERISTICS

| PROGRAMMER NETWORK | | ENERGY (joules) | | PEAK POWER (kilowatts) | VOLTAGE (open-circuit) | | CURRENT (short-circuit) | |
|---|---|---|---|---|---|---|---|---|
| Model | Mode | Stored | Max. Out | Max. Out | Peak or Plateau | Waveshape | Peak | Waveshape |
| PN 261 | | 30 | <.5 | 180. | 0-6 kV | oscillatory .5 usec rise, 100 kHz | 200 A (50 ohms parallel 50 uH) | oscillatory |
| PN 281 | | 30 | <.5 | 180. | 0-6 kV | Same as 261 | Same as PN 261 | |
| PN 282** | | 30 | 6. | 625. | 0-2.5 kV | $< \overline{2} \times > 10$ superimposed on ac line | 1000 A min; 1200-1400 A typ. | 4 us rise-time, > 10 us time to 1/2 crest |
| PN 283 | 1 | 30 | 6 | 500 | 0-5 kV | 5 kV/usec | 100A | 25 usec duration |
| | 2 | | | | | 2 kV/usec | | |

**Actual specifications are on time to crest rather than virtual front time (see section 1.3). This is indicated by $\overline{A} \times B$ rather than A x B.

TABLE 1-1 (con't)

OUTPUT PULSE CHARACTERISTICS

| PROGRAMMER NETWORK | | ENERGY (joules) | | PEAK POWER (kilowatts) | VOLTAGE (open-circuit) | | CURRENT (short-circuit) | |
|---|---|---|---|---|---|---|---|---|
| Model | Mode | Stored | Max. Out | Max. Out | Peak or Plateau | Waveshape | Peak | Waveshape |
| PN 286 | 1 | 30 | .2 | 40. | 3.2 kV | 10 kV/usec* + | 50A | See note+ |
| | 2 | | .2 | 40. | 3.2 kV | 5 kV/usec* + | | |
| | 3 | | 1.6 | 40. | 3.2 kV | 1 kV/usec* + | | |
| | 4 | | 1.6 | 40. | 3.2 kV | .5 kV/usec* + | | |
| | 5 | | 1.5 | 38. | 3 kV | .1 kV/usec* + | | |
| PN 291** | 1 | 630 | 76. | 90. | 1.2 kV (with extended range to 1.5 kV) | 100 to 120 V/usec slope at 700V with 1200 open-circuit | 300A | ~10 x 1000 |
| | 2 | | 20. | 30. | | | 100A | |
| | 3 | | 6.3 | 9. | | | 30A | |
| | 4 | | 1.8 | 3. | | | 10A | |
| | 5 | | .9 | 1.5 | | | 5A | |
| | 6 | | .2 | .3 | | | 1A | |

+ Durations are ~5 usec for 10 and 5 kV/usec; ~40 usec for 1 and .5 kV/usec; ~65 usec for .1 kV/usec. Durations the same for current, except ~45 usec for .1 kV/usec. All durations measured from start of wave to decay to 1/2 peak value.

* To obtain linear fronts, waves are quasi-square waves with 20-25% initial overshoots beyond peak open-circuit (plateau) voltages, except for .1 kV/usec which is roughly triangular. Undershoots range from 5 to 25%. Waves are linear to 3 kV except for .1 kV/usec, which is linear to 2.5 kV. NOTE: Multiply Model 424 digital and go/no go voltage readings X 2.

** Requires Models 210 and 211 Energy Storage Units, and Option I-424. Surge rate, 4/minute.

1.4.3 Monitor

Includes all waveforms, whether full or chopped.

DISPLAYS

Digital

| Range | Display | Resolution | Accuracy for virtual front duration of >5 usec | Accuracy for virtual front duration of <5 usec |
|---|---|---|---|---|
| | | Voltage* | | |
| 10 kV** | 0-9.99 kV | 10 V | ± 3% rdg ± 1% range | ±(3+kV/usec)% rdg ± 3% range |
| 1 kV | 0-1500 V | 1 V | ± 3% rdg ± 1% range | ±(3+kV/usec)% rdg ± 3% range |
| 100 V | 0-139.9 V | 0.1 V | ± 3% rdg ± 1% range | NA+ |

Overrange indications: over 139.9 on 100V range, 1599 on 1 kV range.
Underrange indications: under 40 on 1 kV range, 0.4 on 10 kV range.

| | | | |
|---|---|---|---|
| | | Current | |
| 1 kA++ | 0-1500 A | 1 A | ± 5% rdg ± 2% range |
| 100 A | 0-150 A | 1 A | ± 5% rdg ± 2% range |

Range automatically selected by plug-in Programmer Network

* For short-circuit current I, maximum voltage readings are I/500 for >5 usec virtual front time; and I/50 for <5 usec virtual front time and for ≤ 10 usec time to crest. (Short at terminals.)

** 10 kV range supplied only with Programmer Networks which require it, such as the PN 261 and PN 282.

\+ Not applicable: in wave startup area, and accuracy limited by connectors, terminations, fixturing.

++ Peaks to 2000A with Programmer Networks like PN 247, via simple scaling.

| | |
|---|---|
| Minimum readings | 4% of range, V or I peak meter |
| Controls | voltage range selector, and on-off switch for each display |

Go/No-Go

| |
|---|
| Go/No-Go indicators for voltage and current peaks, based on digital comparison with front panel switch settings for allowable maximum voltage to 1 kV, minimum current to 500 A. |

Analog Outputs

| | |
|---|---|
| Voltage and current | 5V, full range |
| Output impedances | 50 ohms |
| Application | Primarily for use with full impulse waves with >5 usec virtual front duration; such as 10x1000, 8x20, 10x50 etc. |

1.4.4 Interlock Systems

There are two separate interlock systems within the Model 424, one of which is also suitable for the use in conjunction with auxiliary equipment such as the Model 450 Component Test Fixture.

1. Power Interlock System

If the instrument is tilted more than about ten degrees off the vertical in any direction, the input AC to the entire instrument is automatically turned off and the Tilt/Power Interlock light becomes lit. This insures that components within the instrument which must be operated in the vertical position will not be required to function under less-than-optimum conditions.

The power interlock system is also interrupted by removal of the Programmer Network, so that the instrument cannot be powered unless a Programmer Network is in place.*

2. Circuit Interlock System

The circuit interlock system prevents charging the internal energy storage capacitors unless the following requirements are met:

A. A Programmer Network must be plugged in.

B. A link must exist between Out Lo and Measure Lo on the front panel.

* The interlock is also opened by a thermal cutout on the heat sink of the ± 15 V regulator circuitry.

Note

If Measure Lo is connected to Chassis via front panel link (or other means), as recommended, then connection to Out Lo of a scope return or other instrument connected to the third wire of the ac line input, may inadvertently complete the required Out Lo-Measure Lo connection.

C. When auxiliary equipment utilizing the External Adapter jack on the front panel is employed, closure of an external interlock switch such as the one incorporated in the Model 450 Component Test Fixture, is also required.

D. If the Model 424 has been outfitted with a high-voltage, multi-pin rear panel connector for use with the auxiliary Model 210 (and 211) Energy Storage Unit(s), and the cable to those unit(s) is disconnected, a special "keeper" cable must be connected between the multi-pin connector and the rear interlock phone jack to close the circuit interlock.

E. If the Model 424 is connected to the auxiliary Model 210, but an auxiliary Model 211 Energy Storage Unit is also supplied, the 210-211 cable connection must also be made.

If any of the above interlock requirements are not met, the green Charge Ready light will go out, and the Circuit Interlock light on the Model 424 panel will become illuminated. Model 424 Charge and Pulse operations are then inhibited.

1.4.5 Physical Specifications

| | |
|---|---|
| OPERATING TEMPERATURE RANGE | 10 to 50°C |
| DIMENSIONS | 8-3/4" h x 19-1/2" d x 17" w (22.2 x 49.5 x 43.2 cm). (Some Programmer Networks, like the PN 282, protrude approximately 6" (15.2 cm) from the front panel, and must be shipped separately.) |
| WEIGHT | 65-75 lbs. (29.3-33.8 kg), depending on options and Programmer Networks supplied. |

## 1.5 Programmable/Readout Option P

Option P supplies programmability for Charge and Pulse operations in the KeyTek Model 424 Surge Generator/Monitor. Selection of remote operating mode is made via remote input command, causing the front-panel High Voltage light to flash continuously as a safety feature.

In addition to furnishing programmability, Option P also includes remote BCD outputs for resulting clamped peak voltage and current, as well as for voltage and current ranges. Auxiliary printers and other readouts can be used to generate hard copy whether surges are under manual or remote control.

Appropriate print command and data valid signals are included. They are generated only if all Model 424 normal operating requirements are satisfied: all circuit interlocks closed, optimum peak voltage range in use, pulse current exceeding front-panel preset limit and peak clamped voltage less than front-panel preset limit.

Via remote selection, the data valid and print command signals can be generated independent of peak voltage versus preset limit. This feature allows computer/calculator determination of voltage go/no go limits, particularly important when limits change as a function of remotely-controlled modifications of the pulse-forming-network configuration, including output currents.

### 1.5.1 Specifications, Inputs

| | |
|---|---|
| REMOTE CONTROL | - enables the eight following inputs to take control, de-activates front-panel Charge and Pulse switches, and flashes High Voltage light continuously. |
| PULSE (+) | - duration greater than 1 msec generates approximately 5 sec Model 424 Charge function: following which, if PULSE ALLOW enabled, generates (+) Model 424 output pulse. |
| PULSE (-) | - same as PULSE (+), except generates (-) Model 424 output pulse. |
| PULSE ALLOW | - low for normal operation. Open or high to permit Charge but inhibit output Pulse until EXTERNAL PULSE. |
| EXTERNAL PULSE | - open or high for normal operation. Pulse 1 msec to 1 sec maximum, required to generate externally-synchronized Model 424 output pulse. |

CURRENT SELECT - low to select clamped peak current BCD outputs. High to select clamped peak voltage BCD outputs.

DATA VALID CONTROL - low for DATA VALID to include voltage Go as a requirement; open or high for DATA VALID independent of voltage Go/ No Go.

PRINTER BUSY - inhibits new PULSE (+) or PULSE (-) signal.

POLARITIES - low or ground assertion except as noted.

LOADING - one TTL LS load, +1 10K ohm pullup to +5.

### 1.5.2 Specifications, Outputs

PEAK CLAMPED OUTPUT VOLTAGE AND CURRENT - 14 lines, 3 BCD digits plus overrange digit and sign (high for (-)).

VOLTAGE AND CURRENT DECIMAL POINT 1 - low for 100V range, i.e. XXX.X and 10A range i.e. XX.X

VOLTAGE DECIMAL POINT 2 - low for 10kV range, i.e. XX.XX

| | | V/I DP1 | V DP2 |
|---|---|---|---|
| 10kV Range | XX.XX | High | Low |
| 1000V Range | XXXX | High | High |
| 100V Range | XXX.X | Low | High |
| 1000A Range | XXXX | High | High |
| 100A Range | -XXX | High | High |
| 10A Range | -XX.X | Low | High |

DATA VALID - low step indicates:

* BCD and range data stable and may be read,
* peak pulse current greater than set limit,
* peak pulse voltage less than set limit, (unless otherwise selected)
* on 100V range, peak less than 139.9V,
* on 1 kV range, peak between 40 to 1599V,
* on 10 kV range, peak above 0.4 kV,
* all circuit interlocks closed.

| | |
|---|---|
| | - returns high:<br><br>• momentarily if the digital current or voltage limit switch positions are changed<br>• with a new PULSE (+) or (-) input. |
| PRINT COMMAND + | - high for approximately 0.2 sec, starting with leading edge of DATA VALID. |
| PRINT COMMAND - | - logical inverse of PRINT COMMAND +. |
| CYCLE COMPLETE | - 1 msec pulse, approximately 3 sec after Model 424 output surge (and about 2 sec after end of typical Printer Busy signal). Can be used to enable start of next Pulse cycle, or can be directly or'd (remotely) into PULSE (+) or PULSE (-) input. (Approx. 20 usec edge time constants -- suggest Schmitt receiver.) |
| POLARITIES | - low or ground assertion except as noted. |
| LOADING | - 1 TTL + 2 TTL LP or equal. |
| MODES | - all outputs available in both manual and remote control modes. |

1.5.3 Packaging

Option P is fully self-contained within the modified Model -24. Outputs are available at a rear auxiliary connector. An unwired mating connector is supplied as part of the Option: Viking type 3VH18/1JN-5, with hood 036-0097-003.

### 1.5.4 Pin Connections and Loading

CONNECTOR VIKING 3VH18/1JN5 Keyed between 5&6 and 10&11
HOOD VIKING 036-0097-003

(I designates input, O designates output)

| | | | | | |
|---|---|---|---|---|---|
| I | A1 | External Pulse | O | B1 | 4 |
| I | A2 | Pulse Allow | O | B2 | 10 |
| O | A3 | 20 | O | B3 | 40 |
| O | A4 | 8 | O | B4 | Cycle Complete |
| O | A5 | 1 | O | B5 | 2 |
| O | A6 | 1000 | O | B6 | 100 |
| O | A7 | 200 | O | B7 | 400 |
| O | A8 | 800 | I | B8 | Remote Control |
| O | A9 | 80 | O | B9 | DP1 |
| I | A10 | I Select | O | B10 | DP2 |
| I | A11 | | O | B11 | Print Command - |
| I | A12 | Pulse (+) | O | B12 | Print Command + |
| I | A13 | Pulse (-) | O | B13 | Data Valid |
| O | A14 | Sign | I | B14 | Printer Busy |
| I | A15 | Data Valid Control | O | B15 | NGIB |
| | A16 | Spare | | B16 | Spare |
| | A17 | Chassis & Logic Gnd | | B17 | Chassis & Logic Gnd |

NOTE

The signals into and out of the Option P circuitry are filtered as indicted Figs. 1-1 and 1-2. However, they still originate in what is inherently the high-noise environment within the Model 424; hence for ultimate noise immunity for computers or calculators to which the Option P may be connected, optical couplers should be considered for use with the various signals involved.

Schematic 42-415-150 on page 1-26 shows a typical situation for testing -- or using -- the most commonly-used operating parameters of the Model 424 Option P.

Also note that duration figures have been changed from 10 usec to 1 msec for the following inputs and outputs: External Pulse (A1), Pulse (+) (A12), Pulse (-) (A13) and Cycle Complete (B4). Leading and trailing edges have a time constant of about 20 usec, and consideration should therefore be given use of Schmitt trigger gates or inverters as receivers, with or without the optical couplers.

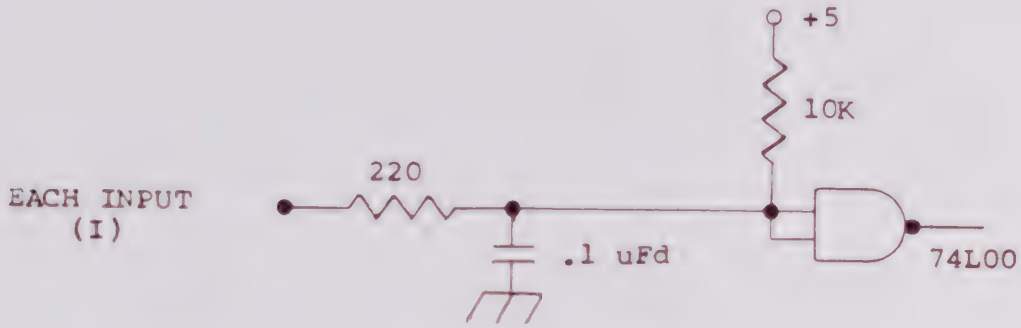


FIG. 1-1

INPUT LOADING

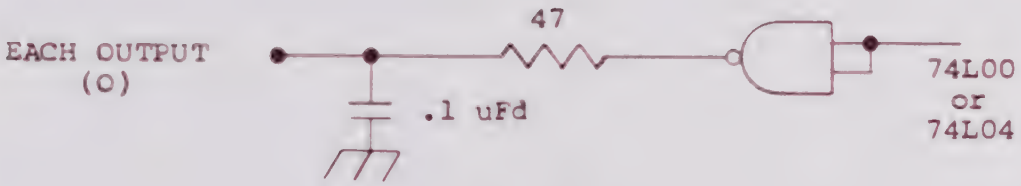


FIG. 1-2

OUTPUT DRIVE

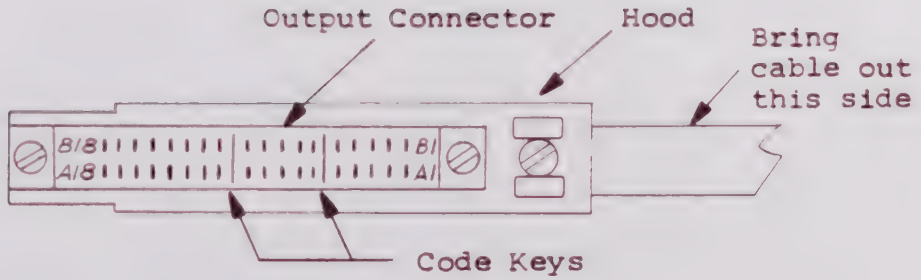


FIG. 1-3

CONNECTOR PINS AND CODING;
CABLE EXIT

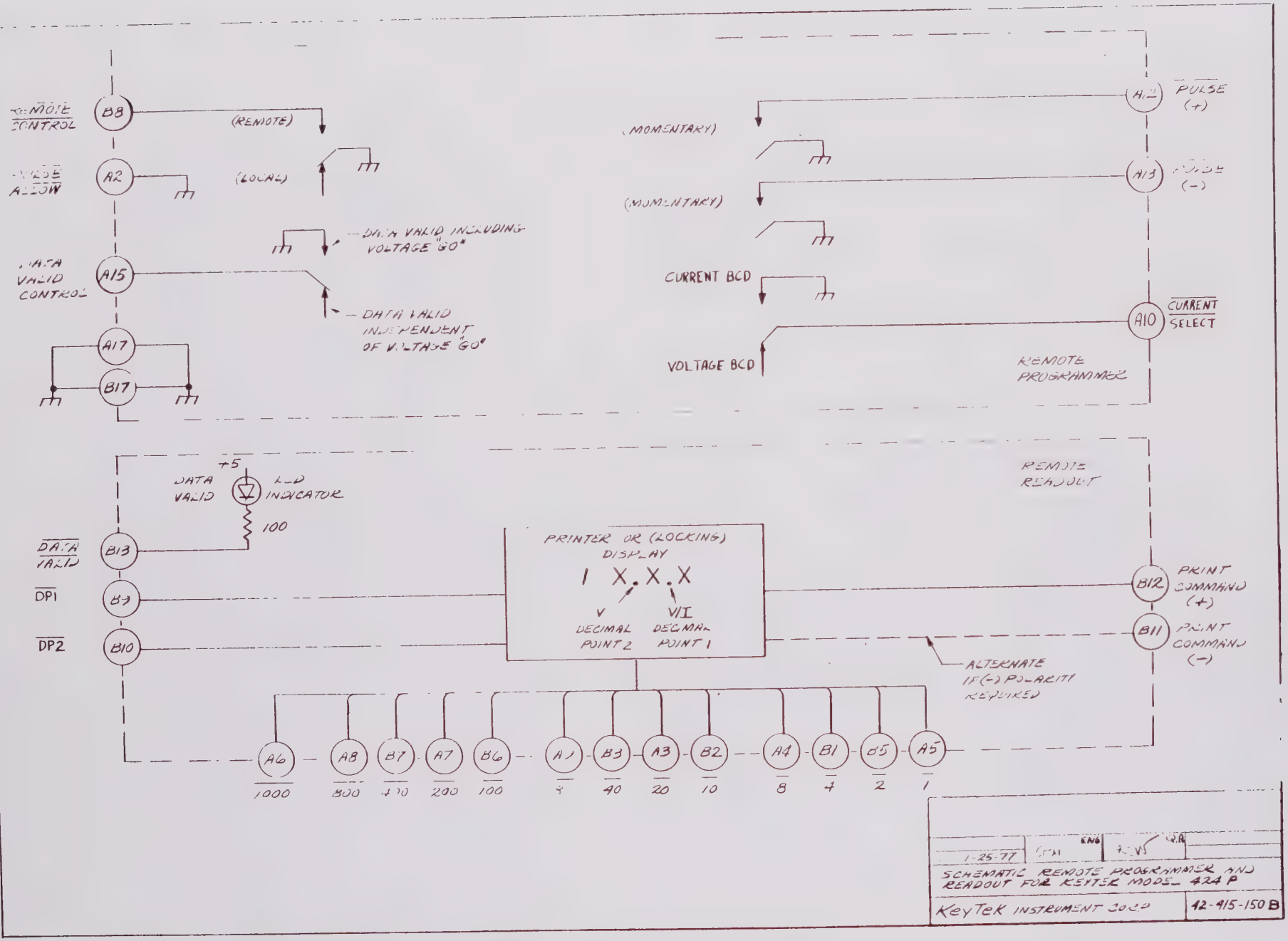
REMOTE CONTROL
B8
(REMOTE)
MODE ALLOW
A2
(LOCAL)
DATA VALID INCLUDING VOLTAGE "GO"
DATA VALID CONTROL
A15
DATA VALID INDEPENDENT OF VOLTAGE "GO"
A17
B17
(MOMENTARY)
(MOMENTARY)
CURRENT BCD
VOLTAGE BCD
A12
PULSE (+)
A13
PULSE (-)
A10
CURRENT SELECT
REMOTE PROGRAMMER
REMOTE READOUT
+5
DATA VALID
LED INDICATOR
100
DATA VALID
B13
DP1
B9
DP2
B10
PRINTER OR (LOCKING) DISPLAY
1 X.X.X
V DECIMAL POINT 2
VII DECIMAL POINT 1
B12
PRINT COMMAND (+)
B11
PRINT COMMAND (-)
ALTERNATE IF (-) POLARITY REQUIRED
A6 A8 B7 A7 B6 A1 B3 A3 B2 A4 B1 B5 A5
1000 800 400 200 100 80 40 20 10 8 4 2 1
1-25-77
SCHEMATIC REMOTE PROGRAMMER AND READOUT FOR KEITEK MODEL 424P
KeyTek INSTRUMENT CORP.
42-415-150 B

## 1.6 Option LS, AC Line-Synchronize

Option LS supplies capability for synchronization of the Model 424 surge output with a specific phase-angle on the ac line it is surging. Placement of the unit's output surge may be selected at any ac line phase angle from 0 to 360 degrees.

The Option is available with selected Programmer Networks, in which it is mounted and becomes an integral part. They include the PN 281 and PN 282.

The major application for the LS Option is to supply the repeatability necessary for quantitative surge-sensitivity investigations for computers, power supplies, and other equipments, in terms of their response to surge position on the ac line. Surge positioning can not only help eliminate uncertainty due to random-phase testing, it can also reduce the total amount of testing required: only a few positioned surges may be needed to replace many of random phase.

The Line Synch Option allows choice of random phase or synchronized mode. In synched mode, it permits selection of desired phase angle, both continuously from 0 to 360 degrees, and detented in quadrants: 0, 90, 180, 270 and 360 degrees. A fixed synch angle, usually positioned at 45 degrees, is also switch-selectable for surging arresters and circuits to obtain maximum reasonable ac power-line follow current durations.

With the Synch mode selected, the Model 424 output surge is phase-synchronized at the selected angle, independent of Model 424 operational mode: manual or remote-programmable.

Synchronization is provided for both 50 and 60 Hz operation. Selection is made via internal switch.

Additional features include an isolated scope synch signal to aid in waveform observation, usually positioned 180 degrees before the 0-degree line phase angle. Also furnished is an isolated, phase-accurate version of the ac 115 or 220 volt ac synch line, at 5% of input amplitude, for scope display. (In both PN 281 and PN 282, the ac synch line is the auxiliary ac line, brought to the side of the plug-in, which is to be surged.)

### 1.6.1 Specifications

| | | |
|---|---|---|
| AC SYNCH LINE | - | the same auxiliary input line already supplied to the Programmer Network to which the LS Option is additional; separate from the main, Model 424 ac power line |
| Voltage | - | 100 to 240V rms, no internal switching |
| Frequency | - | 50 or 60 Hz, selection by internal switch on the LS option board |
| Power | - | less than 1 watt required by LS Option |
| PHASE ANGLE MODES | - | random<br>fixed synchronized<br>variable synchronized |
| Random | - | surges occur with the LS Option inoperative |
| Synchronized | - | for both manual and remotely-programmed operation (via Option P) |
| Accuracy and Repeatability including Model 424 | - | ± 10° typ. |
| Fixed Mode | - | Surge synchronized with auxiliary input line, at 45 degrees. (Can be shipped at different angles; check original equipment specifications.) Provides a repeatable turn-on point for ac follow-current tests for protectors and circuits. |
| Variable Mode | - | Continuously-selectable from 0 to 360 degrees; with detents at 0, 90, 180, 270 and 360. |

| | | |
|---|---|---|
| AUXILIARY PANEL OUTPUTS | - | |
| Scope Synch | - | Ungrounded + pulse, 5 to 8V, independent of surge polarity and magnitude. Occurs at -180° with respect to the ac line. |
| Auxiliary Line Out | - | Ungrounded, phase-accurate, low-voltage version of the ac line to which the surge is synchronized. Magnitude is approx. 5% of auxiliary ac input; or 10V rms for 220V line, 5V rms for 120V line. |

1.6.2 Operation

For oscilloscope display, because of problems associated with scope writing speed, it is ordinarily difficult simultaneously to show both the narrow surge and the comparatively long, ac power-line frequency sine wave on which it is superimposed and to which it is synchronized in phase. In addition to the difference in writing speeds for the two waves, there is usually the problem of grounds as well; the ac line is a dangerous and uncertain place on which to connect the scope, and the surge itself may be ungrounded.

For the above reasons, the LS option is provided with a scope synch output (usually furnished at approximately -180 degrees on the ac line), and a reduced -- 5% of input -- phase-accurate version of the ac line to which the output is synched. Both of these auxiliary output signals are floating, so that when they are grounded at the scope no ground loops will be introduced. (The coax connectors on which they appear, on the front right-hand side of the PN 281-LS, PN-282-LS and so on, are insulated from the panel on which they are mounted.)

Equally important, it is possible with many scopes to intensify a small portion of a large wave, with the intensified portion under position control of an external synch signal. (If it is not, the intensification location can still be controlled via a delay adjust on the scope, but with less precision than a few microseconds out of many milliseconds -- desirable to see a narrow surge on an ac line wave.) NOTE: To take full advantage of the external-synch feature for the intensified portion of the sweep, it is necessary to obtain a pre-trigger from the Model 424, for which purpose OPTION S IS MANDATORY.

Using intensification makes it possible to display the surge -- actually picked up for convenience on the Model 424 V Monitor output -- and the ac line sine wave at the same time, with reasonably good intensity balance for both.

Using the connections and settings from the tables, makes possible displays similar to those of Fig. 1-4. Shown there are surges (from the PN 281-LS) at 0, 90, 180, 270 and 360 degrees for Figs. 1-4 (a) through (e) respectively.

For the photos of Fig. 1-4, the PN 281-LS scope synch output was changed to occur at 0° for display purposes. The only disadvantage of this for normal operation is that normal phase angle tolerance can throw some of the nominally 0° surges slightly below zero, and a 0° synch will then not occur soon enough to enable the surge to be viewed on the display.

TABLE 1-2

SCOPE CONNECTIONS FOR LS OPTION DISPLAY
(Tektronix 7823, 7633, 466 or equivalent)

| | From | Location | To | Signal |
|---|---|---|---|---|
| 1. | Model 424 V Monitor | Model 424 front panel | Scope CH1 input | Scaled version of Model 424 output pulse: 5V full range (i.e., 10 kV for PN 281-LS, PN 282-LS.) |
| 2. | "5/10V AC" output coax from PN 281-LS, PN 282-LS, etc. | Model PN 281-LS, PN 282-LS, etc.: right side, front lower ungrounded coax | Scope CH2 input | AC: scaled version of line to which the LS is synched (i.e., left-side auxiliary line input on PN 281-LS, PN 282-LS, etc. NOTE: front panel circuit breaker must be ON to obtain this signal. |
| 3. | Model 424 Option S output* | Model 424 rear panel coax (ungrounded) | Scope DLY'D TRIG IN | Pre-surge, quasi-square wave trigger, lasting beyond 5 usec. +5 to +8V amplitude. |
| 4. | "SYNCH OUT" coax from PN 281-LS, PN 282-LS, etc. | Model PN 281-LS, PN 282-LS, etc.: right side, front upper ungrounded coax | Scope MAIN TRIG IN | Synch at -180° with respect to ac line to which the LS Option is synched (i.e., left-side auxiliary line input on PN 281-LS, PN 282-LS, etc. NOTE: front panel circuit breaker must be ON to obtain this signal. |

*Use V Monitor output if Option S unavailable.

TABLE 1-3

SCOPE SETTINGS FOR LS OPTION DISPLAY

(Tektronix 7633, 7A18, 7B53A or equivalents)

| Control | Setting |
|---|---|
| 1. MAIN TRIGGERING | |
| A. MODE | SINGLE SWEEP |
| B. AMPLIFIER SOURCE | DC, EXT |
| C. SLOPE, LEVEL | Both + |
| 2. TIME/DIV | 5 msec/div |
| 3. DLY'D TRIG LEVEL | Adjust |
| 4. DLY TIME MULT | 0 |
| 5. Gray/black VARIABLE knob | Pull and set at 1 usec |
| 6. Red CAL knob | Pull |
| 7. DSPLY MODE | Add |
| 8. TRIGGER SOURCE | MODE |
| 9. DLY'D TRIG | |
| A. SLOPE | + (*) |
| B. COUPLING | DC |
| C. SOURCE | EXT |

* Use (-) if V Monitor output is being used instead of Option S output, and a (-) polarity surge is being generated. (See Table 1-2, preceding, item 3.)

Table 1-3A

SCOPE SETTINGS FOR LS DISPLAY
(Tektronix 7834 with 7A18 and 7B92A or equivalent)

| CONTROL | SETTING |
|---|---|
| 1. MAIN TRIGGERING | |
| A. MODE | SINGLE SWEEP |
| B. COUPLING | AC HF REJ |
| C. SOURCE | EXT |
| D. SLOPE | + |
| E. LEVEL | Approximately 1 o'clock position. |
| 2. TIME/DIV | 2 msec/div |
| 3. Gray/black "FULL FOR ALT" knob | pull out and set at 10 usec for P1, .1 msec for P3. |
| 4. TRACE SEP | Full CCW |
| 5. Time base INTENSITY | Approximately 3 o'clock position. |
| 6. DELAY TIME MULT | 0 |
| 7. DELAY TRIGGERING | |
| A. SLOPE | + |
| B. COUPLING | DC |
| C. SOURCE | EXT |
| D. LEVEL | Approximately 1 o'clock position. |
| 8. External Trigger Input Termination | 50 |
| 9. DISPLAY MODE | Add |
| 10. TRIGGER SOURCE | MODE |
| 11. CHANNEL 1 | |
| A. VOLTS/DIV | 1 Volt/div |
| B. COUPLING | DC |
| 12. CHANNEL 2 | |
| A. VOLTS/DIV | 5 Volts/div |
| B. COUPLING | DC |
| 13. Storage mode | VAR PERSIST |

Table 1-3B

SCOPE SETTINGS FOR LS DISPLAY
(Tektronix 466 or equivalent)

| | CONTROL | SETTING |
|---|---|---|
| 1. | MAIN TRIGGERING | |
| | A. MODE | EXTERNAL |
| | B. COUPLING | + |
| | C. SOURCE | AC HF REJ |
| | D. SLOPE | SINGLE SWEEP |
| | E. LEVEL | Approximately 1 o'clock position. |
| 2. | DELAY TRIGGER | |
| | A. SOURCE | EXTERNAL |
| | B. COUPLING | + |
| | D. SLOPE | HF REJECT |
| | E. LEVEL | Approximately 1 o'clock position. |
| 3. | DELAY TIME POSTION | Full CCW |
| 4. | MAIN SWEEP | 2 msec/div |
| 5. | DELAY SWEEP | Pull and set at 2 usec for P1, 20 usec for P3 |
| 6. | HORIZONTAL DISPLAY MODE | A INTENSIFY |
| 7. | VERTICAL DISPLAY MODE | ADD |
| 8. | CHANNEL 1 | .5 Volt/div DC |
| 9. | CHANNEL 2 | 5 Volts/div DC |
| 10. | STORAGE MODE | VARIABLE PERSIST. |

(a) 0°

(b) 90°

(c) 180°

(d) 270°

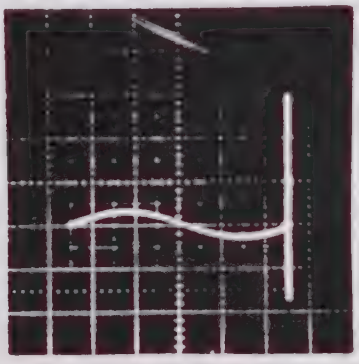

(d) 360°

Fig. 1-4

LS OPTION DISPLAYS: 0,90, 180, 270, 360°

1.6.2.1 50 or 60 Hz Operation Selection

A selector switch for 50 or 60 Hz operation is located on the vertically mounted LS printed circuit board accessible when the top front cover of the PN 281-LS or PN 282-LS is removed. To remove the top front cover, remove 4 unpainted flat-head screws (2 on each side) and lift off cover. The switch is located on the front right-hand side of the PC board

For 50 Hz operation move switch lever AWAY from PC board, and for 60 Hz operation move lever toward PC board.

1.6.2.2 50 or 60 Hz Initial Zero Adjustment

When installing a PN 281-LS or PN 282-LS into a Model 424 Surge Generator/Monitor for which it has not been set up, an initial zero adjustment is normally required for both 50 Hz and 60 Hz. The 50/60 Hz selector switch described above must be set to the proper position and the appropriate potentiometer adjusted. The 50 Hz potentiometer is located directly to the left of the selector switch, and the 60 Hz potentiometer is directly to the right.

To adjust the zero, set up PN 281-LS or PN 282-LS for oscilloscope display according to 1.6.2, Operation, specifically using Table 1-3, and adjust potentiometer for an average positioning of the surge at $0^{\circ}$, when front panel selection is $0^{\circ}$.

Note: An average of about 5 surges is recommended to determine phase position in view of the $\sim 10^{\circ}$ typical repeatability of phase positioning.

SECTION 2

## 2. Operating Instructions

### WARNING

The Model 424 is designed to test devices and circuits for protection against high-voltage, high-energy electrical surges. Such surges occur in field use of equipment, and result from natural phenomena such as lightning discharges and power-line disturbances. The only sure way to test for withstand and susceptibility protection against these phenomena is to simulate surge waveforms known to result from them.

The pulses involved necessarily include voltage peaks of over 6000 volts and current peaks to 2000 amperes; with energy discharges as high as 80 joules with basic unit, 630 with add-ons.

Surges at the above levels are potentially dangerous and even lethal. Hence even though all reasonable design precautions have been taken via interlocks, dual-switch operation and so on, the instrument should be used only by or under the direct supervision of qualified personnel, and only after thorough understanding, via this manual, of the recommended connections and methods of operation. Specific emphasis should be placed on this section, Operating Instructions.

In isolated situations, components being surged may fragment if they are improperly manufactured, or are misapplied for the surge energies involved. For this reason, components and circuits being surge-tested should be covered to prevent personnel hazard.

### 2.1 Power Requirements and Set-up; Different Line Voltages

The Model 424 may be operated from an ac power source of 100, 120, 220 or 240 volts (±10%), 50-60 Hertz. The selection of the desired voltage is made prior to connecting the instrument to the power source in the following way:

1. Make sure line cord is removed from rear panel.

2. Slide clear plastic protector cover from right to left, covering the line receptacle and uncovering the fuse.

3. Pull fuse ejector out and all the way to the left, ejecting the fuse and providing access to the voltage selector board.

4. Using a pair of pliers, remove the voltage selector board, replacing it in one of the four possible positions with desired voltage designation showing after it is re-installed.

5. Install the covered fuse: 3A Slow-Blow for 100 and 120 V operation,1.5A Slow-Blow for 220 and 240 V operation.

6. Push fuse ejector to the right and all the way back in; slide the clear plastic protector plate back in place over the fuse, and install the line cord in the now-uncovered receptacle.

Fig. 2-1 gives additional details.

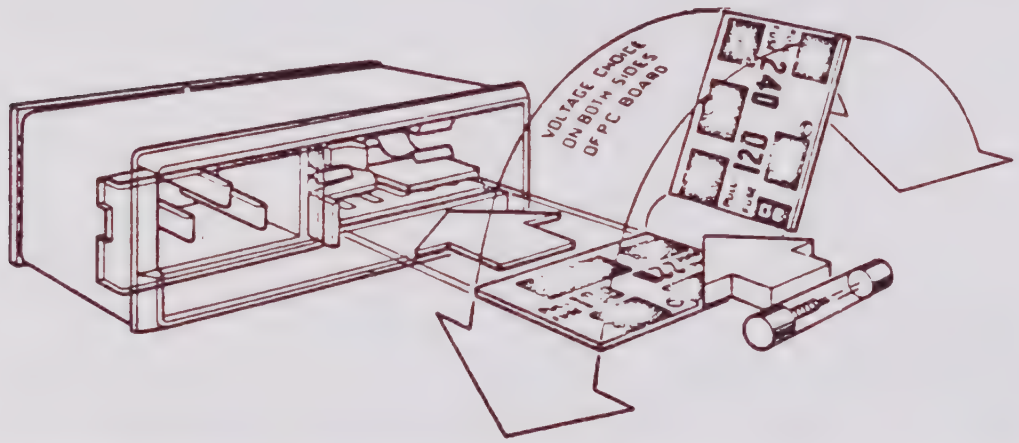


Operating voltage is shown in module window.

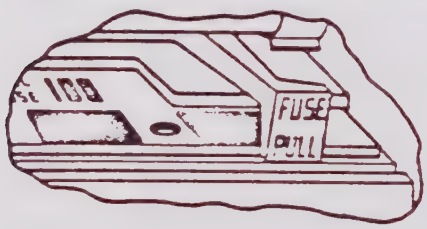


**SELECTION OF OPERATING VOLTAGE**

1. Open cover door and rotate fuse-pull to left.
2. Select operating voltage by orienting PC board to position desired voltage on top-left side. Push board firmly into module slot.
3. Rotate fuse-pull back into normal position and re-insert fuse in holders, using caution to select correct fuse value.

Figure 2-1

Power dissipation is approximately 50 watts average, 200 watts maximum. During the capacitor charge, peak line current reaches 10 A for about 0.1 second (0.8 sec with Models 210 and 211).

A three-conductor power cable is provided; when it is connected to a standard three-wire outlet, the instrument chassis is connected to power system ground. This prevents the instrument case from assuming voltages hazardous to personnel. In the event an adapter is used to connect the three wire cable to a two-wire outlet the green adapter terminal should be connected to the power system ground.

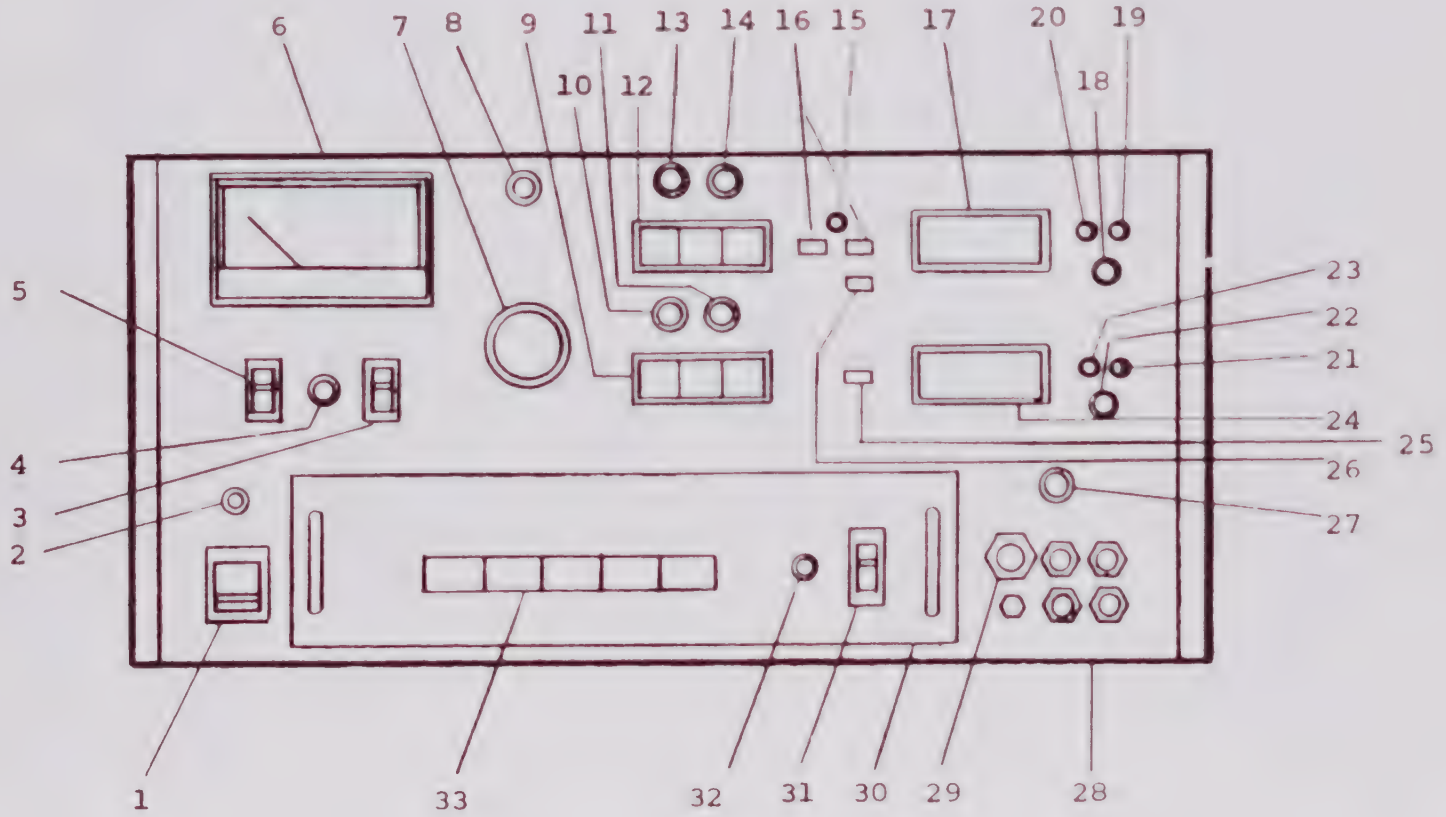


FIG. 2-2
FRONT PANEL CONTROLS AND DISPLAYS

## 2.2 Installation

The Model 424 standard configuration is bench mounted. Combination handles and rack mounting ears are available on special order as Option 51, and are interchangeable with the bench mounting handles. Note: some Programmer Networks, like the PN 282, overhang the Model 424 front panel by about six inches. In rack mount installations, a shelf should therefore be provided on which this overhang may rest.

## 2.3 Controls and Displays

Figures 2-2 and 2-3 illustrate and describe the function of all front and rear panel controls, connections and indicators, respectively. Each element of control, display or connection is numbered and the description of the function appears under the number in the tables following.

### 2.3.1 Front Panel (Fig. 2-2)

1. Power switch (rocker, illuminated)
   Press upper half for on, press lower half for off.

2. Tilt/Power Interlock
   Lit when the instrument is off level by more than approximately ten degrees. Also illuminated if the power is on and a Programmer Network is not plugged in, or for internal thermal overload.

3. Charge (+) switch
   Momentary, spring return lever switch, normally in the up position. When depressed, it sets in motion the control sequence leading to charging of the internal storage capacitor(s) with a positive voltage, as determined by the specific Programmer Network being employed.

4. Charge Ready Light
   When illuminated, indicated that a sufficient period of time has elapsed - several seconds - since removal of the most recent Pulse switch actuation, and the Model 424 is once again ready to be charged, to prepare for generation of the output pulse.

5. Charge (-) switch
   Same as the Charge (+) switch, except charges internal capacitor(s) with negative voltage.

6. Peak Open Circuit Voltage Meter
   Indicates the peak open circuit voltage that will be supplied to the load, as selected by

Set Voltage selector (7). Also shows state of charge on capacitor, as it rises; and as it is discharged either during the pulse, or if either Charge switch (3 or 5) is released without pulsing the output. Range is from 0 - 1500 peak volts. (Some Programmers shape waves whose peaks are some factor times this meter reading -- 4:1 for the PN 261 and 2:1 for the PN 282, as examples, generating up to 6 kV and 2.5 kV respectively.)

Note

Actual peak open circuit voltage, for "rate-of-rise" waves, may be 15-30% higher than the open-circuit meter setting, due to overshoot required to obtain a linear wave front. The "plateau" voltage following the overshoot and prior to decay, is indicated on the meter.

7. Set Voltage Control
   Permits operator setting of peak open circuit output voltage, as indicated on the meter (6). Also used to establish a desired output current into a protector or system, since short-circuit current is proportional to open-circuit voltage.

8. Circuit Interlock Light
   This light is lit, and charge of internal capacitor storage is inhibited, if the Circuit Interlock is open for any reason. See section 1.4.4 for list of all circuit interlock functions.

9. Digital Current Limit Switch
   Sets minimum allowable peak output current for Current GO indication, ranging to 999 amperes with 1 ampere resolution.

   For some higher-current Programmers like the PN 247, higher current limits are available as simple multiples of the setting on the Current Limit Switch.

10. Current GO Indicator
    When lit, indicates that peak output current during the previous pulse was greater than the setting on the Digital Current Limit Switch (9).

11. Current NO GO Indicator
    When lit, indicates that peak output current during the previous pulse was less than or equal to the setting on the Digital Current Limit Switch (9).

12. Digital Voltage Limit Switch

Sets maximum allowable peak output voltage for Voltage GO indication, ranging to 999 volts with 1 volt resolution on the 1 kV range, and to 99.9 volts with 0.1 volt resolution on the 100 volt range.

Also operative on the 10 kV range for applicable Programmer Networks like the PN 261 and PN 282, ranging to 9.99 kV with a resolution of 10 volts.

13. Voltage GO Indicator

When lit, indicates that peak output voltage during the previous pulse was less than the setting on the Digital Voltage Limit Switch (12).

14. Voltage NO GO Indicator

When lit, indicates peak output voltage during the previous pulse was greater than or equal to the setting on the Digital Voltage Limit Switch (12).

15. Over/Under Range Light

When blinking, indicates that the peak of the previous voltage pulse was 1) greater than 139.9 volts if the Range switch (16) is in the 100 volt range, 2) less than 40 or greater than 1599 volts if the Range switch (16) is in the 1 kV position. For both overrange conditions (greater than 139.9 or 1599 volts), the Display (17) is useless and hence is blanked. For the underrange case (less than 40 volts) it blinks, since while the display may be grossly in error, it may still provide useful information.
In 10 kV range (see item 12 above), blinks below 400V.

16. Voltage Range Push Button Switch

Allows selection of 100 volt or 1 kV range for measuring the output peak voltage clamped by the protector or system under test. (Two interlocked push-button switches.) 10 kV range is selected externally (see item 29), with 1 kV range internal.

17. Digital Peak Voltage Display

Three Digits plus overrange digit and sign, to indicate peak output voltage as measured at the device or load under test. Indicates from 0 to $\pm$1599 volts on the 1 kV range, with 1 volt resolution; and to $\pm$139.9 volts on the 100 volt range with 0.1 volt resolution. When applicable, indicates to $\pm$9.99 kV with 10 volt resolution for applicable Programmers.

18. Voltage Monitor Output
    Coaxial monitor output for use with external oscilloscope, for monitoring the shape of the output voltage pulse appearing at the load. 5 volts out corresponds with 1000 volts at the load, on the 1 kV range; and with 100 volts at the load on the 100 volt range. (±8V maximum output.) On the 10 kV range when applicable, 5 volts corresponds with 10 kv.

19. Range Indicator for Voltage Monitor Output (18)
    Lit when Voltage Monitor output scale factor is 200 volts per volt - i.e., 5 volts out corresponds with 1 kV delivered to the load (or 10 kV when the Programmer Network in use makes that range applicable).

20. Range Indicator for Voltage Monitor Output (18)
    Lit when Voltage Monitor output scale factor is 20 volts per volt - i.e., 5 volts out corresponds with 100 volts delivered to the load.

21. Range Indicator for Current Monitor Output (22)
    Illuminated when Current Monitor Output scale factor is 200A per volt - i.e., 5 volts out corresponds to 1000A delivered to the load (or higher currents, such as 2000A for certain Programmers like the PN 247 (via simple multiplication)).

22. Current Monitor Output
    Coaxial monitor output for use with external oscilloscope, for monitoring the shape of the load current pulse. 5 volts out corresponds with 1000A on the 1 kA range, with overranging to 1500A. 5 volts out corresponds with 100A on the 100A range, with overranging to 150A. Current range selection is accomplished automatically by the plug-in Programmer Network. (±7.5V maximum output.)

23. Range Indicator for Current Monitor Output (22)
    Lit when Current Monitor scale factor output is 20 amperes per volt - i.e., 5 volts out corresponds with 100A delivered to the load.

24. Digital Peak Current Display
    Three digits plus sign, for indication of peak current measured through the load during the previous pulse. Maximum current indication 1500A on 1 kA range, 150A on 100A range. Resolution is 1A, independent of range. (To over 2000A via multiplication.)

25. Current Display ON-OFF switch
    Push-push switch to allow turning off the digital current display, to prevent interference with go/no go operation.

26. Voltage Display ON-OFF switch
    Push-push switch to allow turning off the digital voltage display, to prevent interference with go/no go operation.

27. High voltage Output Light
    Lit when one of the two charge switches has been depressed. Indicates that if the pulse switch (30) on the Programmer Network is then activated, high voltage will appear at the Output Terminal Array (28).

    Flashes when in remote mode (selected externally) with Programmable/Readout Option P, to indicate that Charge/Pulse operation is under external control.

28. Output Terminal Array
    Output terminals, Hi and Lo, are drive connection points for the device or system under test. Separate Measure Hi and Lo terminals allow four-wire connections, so the the voltage being measured will be the actual voltage at the load, excluding resistance and inductance drops in the Output Hi and Lo leads. For relatively higher voltage and lower current operation, the Measure Hi and Out Hi terminals may be linked at the output terminal array, with Measure Lo and Out Lo terminals linked there as well. In any event, for general purpose operation the Chassis Ground terminal should be linked with the Measure Lo terminal, for maximum personnel safety. The Chassis Ground terminal is connected to the instrument frame, and to the third or ground wire on the Model 424 rear input ac power connector.

29. External Adapter Jack
    For use with auxiliary equipment such as the KeyTek Model 450 Component Test Fixture. When used, allows the external equipment interlock to prevent charging the pulsing the Model 424 internal energy storage capacitor.

    Also permits external actuation of 10 kV decimal point lights in both digital and go/no go peak voltage displays, via auxiliary external equipment.

30. Programmer Network
    Plug-in assembly. Contains the pulse-forming network that transfers capacitor-stored energy to the output terminals, in the form of the desired output waveshape.

31. Pulse Switch (Mounted on Programmer Network (30))
    Lever switch, similar to the Charge (+) and Charge (-) switches (3 and 5), which can only generate an output pulse if one of the two charge switches has been previously depressed, and if the Ready Light (32) adjacent to the Pulse switch is illuminated. Thus, two-hand operation of the equipment is necessary; one hand depressing one of the two Charge switches, and the other the Pulse switch after the Pulse Ready Light has become lit.

32. Pulse Ready Light (Mounted on Programmer Network (30))
    Lit when the internal capacitor is fully charged, several seconds after depression of either the Charge (+) or the Charge (-) switch. For higher energy plug-in Programmer Networks, the delay can be as long as 45 seconds. The light does not indicate charge conditions on the internal storage capacitor. Instead, it lights after a fixed time delay, determined by the Programmer Network in use, after activation of one of the two Charge switches. Thus, if voltage on the capacitor is adjusted via the Set Voltage Control (7), some seconds should be given the capacitor to reach full final charge after the last setting adjustment has been made, before depressing the Pulse switch (30), in order to obtain full desired output amplitude.

33. Programmer Network Selector Switch
    This interlocking push button switch, with from two to six positions, selects Programmer Network mode. For some Programmers, no switch is provided as only one mode exists.

34. Other Specialized Controls, Connectors and Indicators
    These may be used on the front panels of specialized Programmer Networks. Consult sections dealing with these when they are furnished.

2.3.2 Rear Panel (Fig. 2-3)

1. Combined Line Cord Receptacle for ac power; 100/120/220/240 volts ac, 50-60 Hz; with fuse-holder. (3A Slo-Blo at 100 and 120 V, 1.5A Slo-Blo at 220 and 240 V.) Also includes Line Voltage Selector Board.

2. High-voltage multi-pin connector for connection to auxiliary Model 210 Energy Storage Unit. Connector supplied only when at least the Model 210 is furnished. If supplied, it requires a "keeper" cable if the Model 210 isn't connected, or else the Model 424 circuit interlock system won't be enabled.

3. Remote interlock connector associated with (2). The 'keeper' cable is connected between (2) and (3). (Optional)

4. Option V connector, for interconnection of the Model 424 with the Model 501. When supplied,

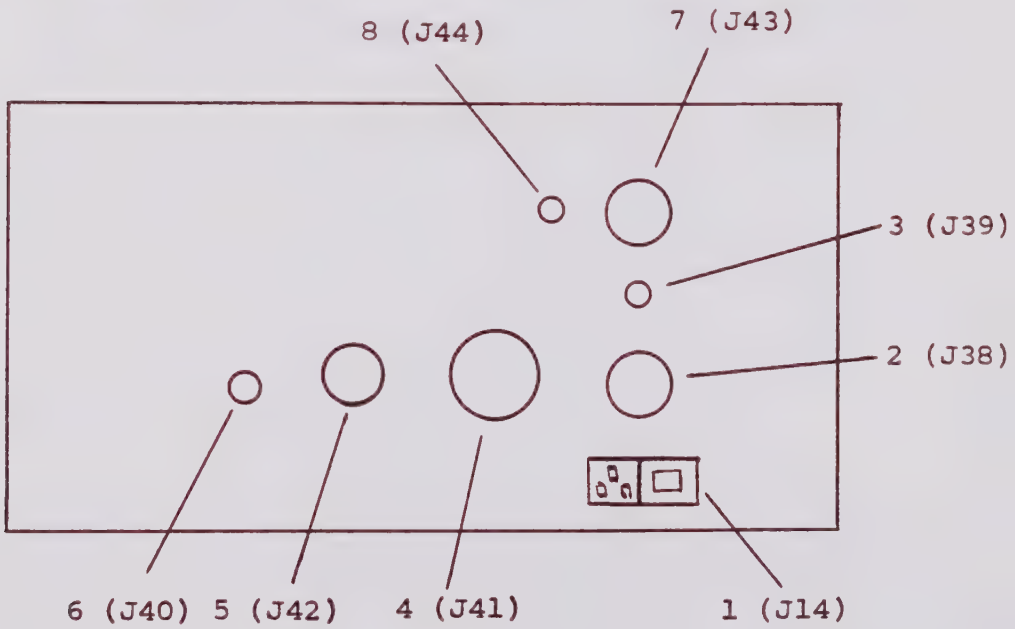


Fig. 2-3

Model 424 Rear Panel

it requires a "keeper" (also supplied as standard equipment with either Option V or the Model 501), for operation of the Model 424 without the connection to the Model 501.

5. Option L connector, for interconnection of the Model 424 with the Model 201. It does not require a "keeper" when the Model 201 isn't used.

6. Option S, of Scope Synch connector. This BNC-type coax is not connected to Chassis Ground, so that when that connection is made at the scope, a ground loop will be avoided.

7. Location for one of two Option connectors: either AC/501, or Surge Out.

8. Interlock connector associated with Option (Surge Out) in (7).

This space left blank intentionally.

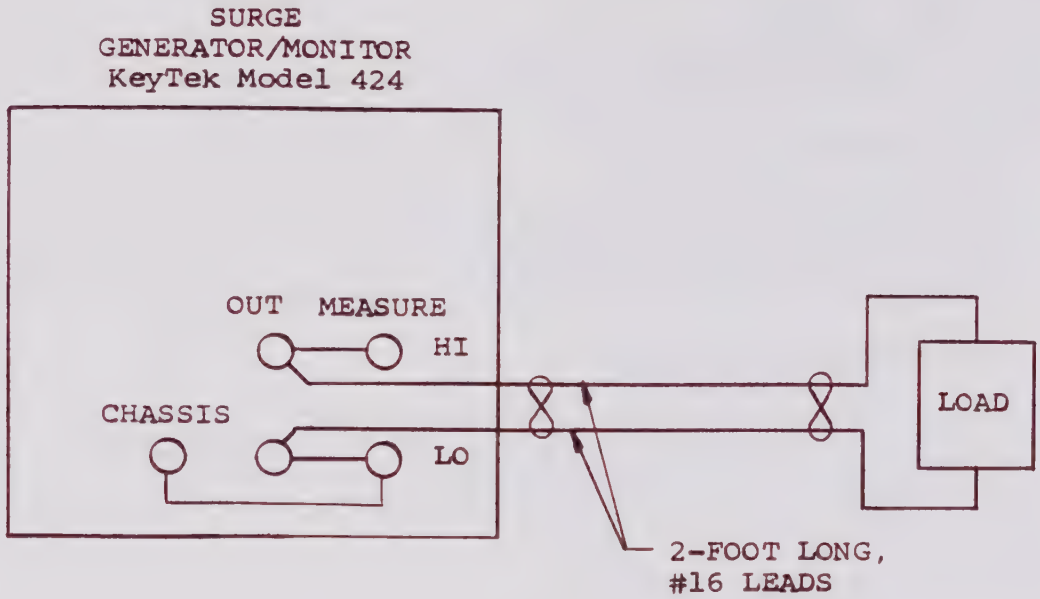


FIG. 2-4(a)
TWO-TERMINAL OUTPUT CONNECTION
(NOT RECOMMENDED)

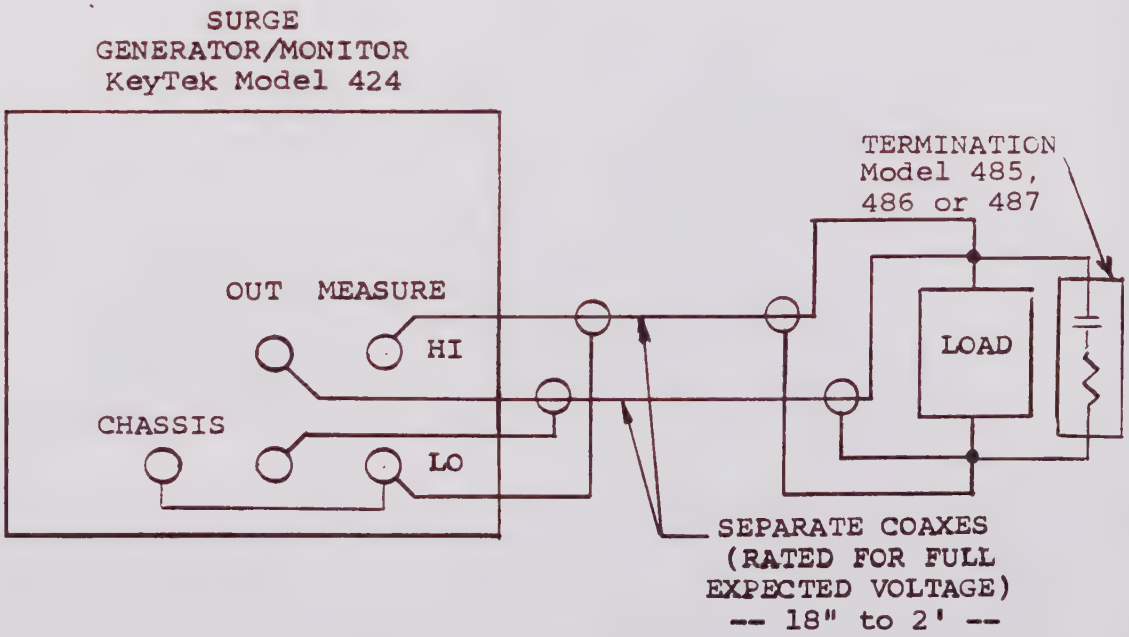


FIG. 2-4(b)
FOUR-TERMINAL OUTPUT CONNECTION
PREFERRED

For a 6.8V surge-rated zener (or silicon avalanche device), or even for gas-tubes or other devices driven at high rates-of rise, this kind of output connection can result in almost meaningless measurements.

To get accurate measurements essentially independent of leads use a separate set of Measure lines (high and low), rather than jumpering the Out-Measure terminals at the Model 424 output: as shown in Fig. 2-4(b). This preferred connection setup provides full rated accuracy, so long as leads are still kept reasonably short -- up to about two feet -- for the highest currents and/or rates-of-rise.

In Fig. 2-4(b), however, note the highly preferred use of coax lines. At the higher current levels and very lowest clamping voltages, and for very fast wavefronts, pickup and/or coupling between the separate Output and Measure, Hi-Lo loops, may still cause measurement errors if coax lines are not used. Such coupling can introduce unwanted, erroneous voltages into the measurement circuit. Offsets of tens of volts at high currents and even higher for fast rates-of-rise, are quite possible due to this effect. All of these problems can be significantly reduced using the coax, 4-lead connections shown in Fig. 2-4(b).

To reduce Out/Measure loop coupling errors to an absolute minimum, either:

1. Mount the component or circuit under test right at the Model 424 Measure Hi - Measure Lo terminal pair; mounting the KeyTek Termination (use either the Model 485 or the 486, they are identical networks) at the Measure Hi-Measure Lo terminals as well, as in Fig. 2-7; or

2. Mount the component under test in its usual test fixture or location, preferably less than two feet of wire removed from the Model 424 output; using the preferred connections of Fig. 2-4(b). Then "calibrate out" any residual coupling effects, that is, determine a correction to be used for the specific test setup. This may best be done by first measuring several similar devices for the wave in use, via the method of (1) above; then in the final test fixture or location. The average difference between readings can then be used as a correction on test-fixture-obtained results for the specific wave used with similar devices.

Note: In the preferred connection method of Fig. 2-4(b), the termination (actually a 0.0011 ufd capacitor in series with a 27 ohm resistor for the Models 485 and 486) should be mounted at the load as shown. If the capacitance of the cables to the load is to be taken into account, a lower-capacitance termination may be desired. (100 pfd changes slope by about 8% at 10 kV/usec).

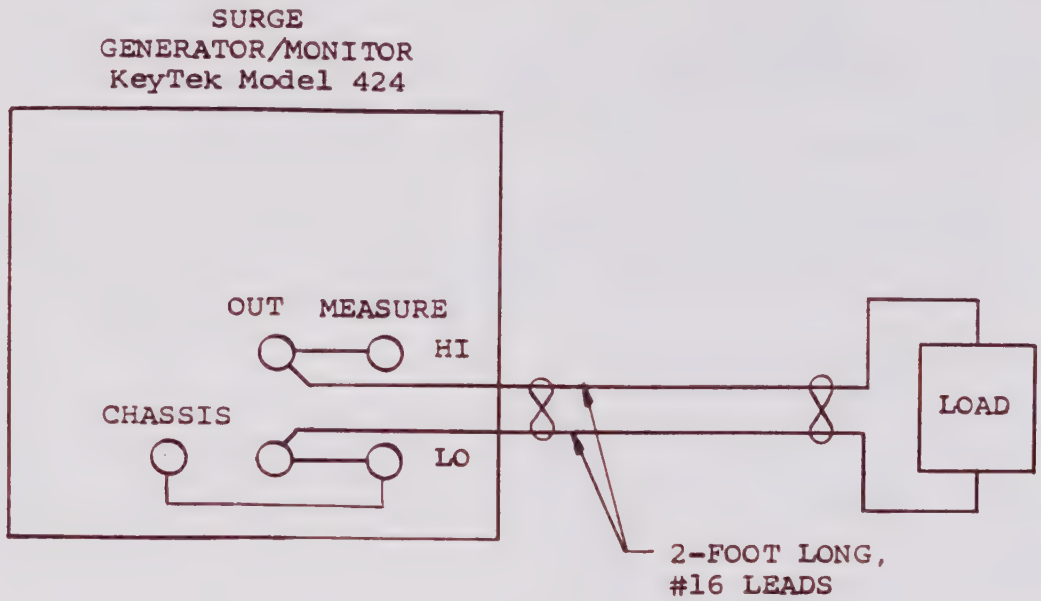


FIG. 2-4(a)
TWO-TERMINAL OUTPUT CONNECTION
(NOT RECOMMENDED)

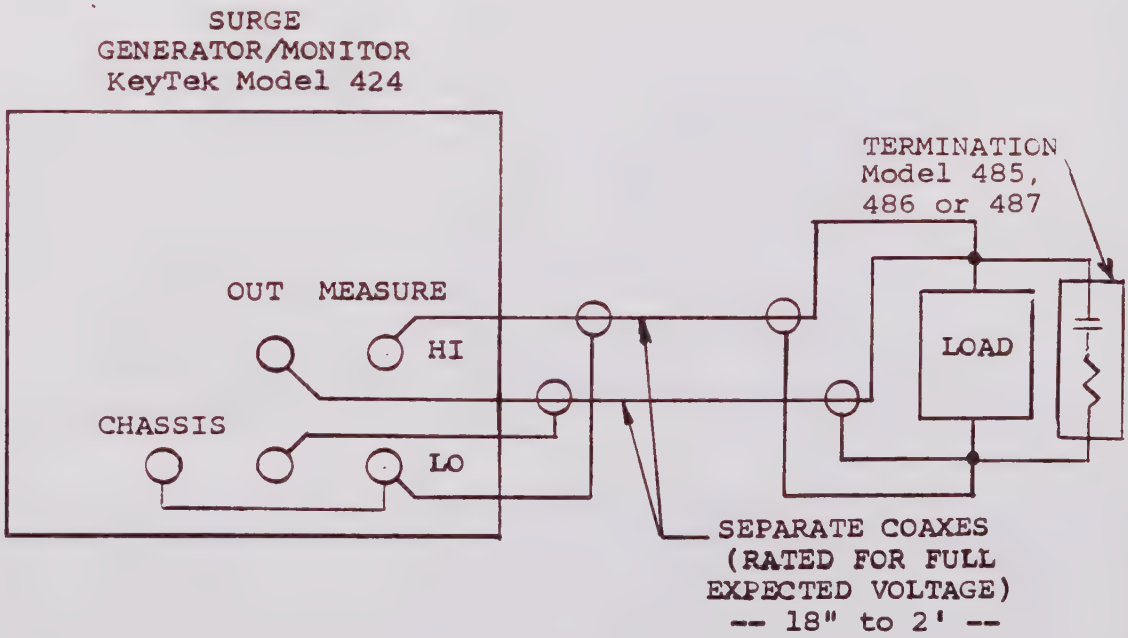


FIG. 2-4(b)
FOUR-TERMINAL OUTPUT CONNECTION
PREFERRED

For a 6.8V surge-rated zener (or silicon avalanche device), or even for gas-tubes or other devices driven at high rates-of rise, this kind of output connection can result in almost meaningless measurements.

To get accurate measurements essentially independent of leads use a separate set of Measure lines (high and low), rather than jumpering the Out-Measure terminals at the Model 424 output: as shown in Fig. 2-4(b). This preferred connection setup provides full rated accuracy, so long as leads are still kept reasonably short -- up to about two feet -- for the highest currents and/or rates-of-rise.

In Fig. 2-4(b), however, note the highly preferred use of coax lines. At the higher current levels and very lowest clamping voltages, and for very fast wavefronts, pickup and/or coupling between the separate Output and Measure, Hi-Lo loops, may still cause measurement errors if coax lines are not used. Such coupling can introduce unwanted, erroneous voltages into the measurement circuit. Offsets of tens of volts at high currents and even higher for fast rates-of-rise, are quite possible due to this effect. All of these problems can be significantly reduced using the coax, 4-lead connections shown in Fig. 2-4(b).

To reduce Out/Measure loop coupling errors to an absolute minimum, either:

1. Mount the component or circuit under test right at the Model 424 Measure Hi - Measure Lo terminal pair; mounting the KeyTek Termination (use either the Model 485 or the 486, they are identical networks) at the Measure Hi-Measure Lo terminals as well, as in Fig. 2-7; or

2. Mount the component under test in its usual test fixture or location, preferably less than two feet of wire removed from the Model 424 output; using the preferred connections of Fig. 2-4(b). Then "calibrate out" any residual coupling effects, that is, determine a correction to be used for the specific test setup. This may best be done by first measuring several similar devices for the wave in use, via the method of (1) above; then in the final test fixture or location. The average difference between readings can then be used as a correction on test-fixture-obtained results for the specific wave used with similar devices.

Note: In the preferred connection method of Fig. 2-4(b), the termination (actually a 0.0011 ufd capacitor in series with a 27 ohm resistor for the Models 485 and 486) should be mounted at the load as shown. If the capacitance of the cables to the load is to be taken into account, a lower-capacitance termination may be desired. (100 pfd changes slope by about 8% at 10 kV/usec).

2.4.4 Interlocks: Relation to Output Connections

In addition to its basic dual-switch (Charge/Pulse) mode of operation, the Model 424 includes two separate interlock circuits, to insure against improper or dangerous operation.

1. Power Interlock System

The ac line is first applied to the front panel on-off switch, (1) in Fig. 2-2, and is then interlocked by the:

A. Plug-in Programmer Network (30) in Fig. 2-2, so that removal of a Programmer Network will disconnect ac power; and

B. Left-Right and Front-Rear tilt switches, also located on the Regulator board at the right top rear of the instrument, so that tilt in either axis past about 12° will likewise disconnect ac power. This last power circuit interlock feature prevents excess stress on or malfunction of instrument components meant to be operated in near-vertical positions, namely the mercury-wetted and mercury-plunger relays used to obtain high-reliablility constant impedance and high-voltage switching in critical circuit locations.*

Whenever the Power Interlock System is opened, all ac power is removed from internal rectifiers, regulators and the high-voltage supply, so that front panel Charge and Pulse switches will be ineffective. In addition, the Tilt/Power Interlock Light (2) in Fig 2-2, directly above the Power On switch, will be lit.

2. Circuit Interlock System

Operation of the Charge and Pulse switches is inhibited, and the Circuit Interlock Light illuminated,(8) in Fig. 2-2, unless all of the following requirements are met:

A. A Programmer Network must be plugged in.

* The interlock is also opened by a thermal cutout on the heat sink of the ± 15 V regulator circuitry.

B. There must be a connection between Out Lo and Measure Lo on the output terminal array, (28) in Fig. 2-2.

Note

If the Measure Lo terminal is connected to the Chassis Ground terminal via front panel link or other means as generally recommended, then connection to Out Lo of an oscilloscope low or other instrument return that is also connected to the third or ground wire of the ac line, will complete the Out Lo-Measure Lo connection; hence the interlock will not appear to open when and if the specific connection between these two points is disconnected. Of course, any specific interlock system using the External Jack will still be operative; only the Out Lo-Measure Lo link requirement will be bypassed by the ac line ground connections. Naturally, this problem will not exist if external equipment low or return is connected to Measure Lo rather than Out Lo, as Measure Lo is already connected to ac line ground via the Chassis Ground connection.

For high-current loads, greatest accuracy will result when the load is mounted directly at the Model 424 Measure terminals, as shown in Fig. 2-7. Connections to the Out terminals are short, and the Auxiliary Equipment measures the output directly at the same points at which the Model 424 Measure input is applied.

If errors due to the auxiliary Out Hi/Lo-to Measure Hi/Lo inductive coupling loops are to be calibrated for the connection method of Fig. 2-6, the connection method of Fig. 2-7 can be used, measuring the same protector or other load. The protector or other load need not be repeatable, since what is being calibrated is the difference between the two instruments.

C. If the External Jack (29) in Fig. 2-2 is in use, the interlock switch must be closed in whatever auxiliary external equipment is connected to it (such as the Model 450 Component Test Fixture). Note that if the External Jack is not in use, then internal terminals in the Jack automatically short out this interlock, so that normal operation of the instrument will not be inhibited. Only if the

Jack is interfaced with an external interlock system -- such as a door on a test chamber or fixture, can the Jack interrupt operation. See Fig. 2-5.

D. If the Model 424 has been outfitted with a high-voltage, multi-pin rear panel connector for use with the auxiliary Model 210 (and 211) Energy Storage Unit(s), and the cable to those unit(s) is disconnected, a special "keeper" cable must be connected between the multi-pin connector and the rear interlock phone jack to close the circuit interlock.

E. If the Model 424 is connected to the auxiliary Model 210, but an auxiliary Model 211 Energy Storage Unit is also supplied, the 210-211 cable connection must also be made.

2.4.5 Terminations: Which to Use with Each Programmer

Terminations, supplied with the equipment as required, are used in conjunction with the Model 424 output terminal array, to serve one of two purposes:

1. To provide a controlled impedance at the end of the internal plus external cable so that the very steep edges involved in the fast waveforms will 'ring' a minimum amount.

2. Some Programmer Networks provide principal output at terminals on the Programmer unit itself, rather than from the Model 424 output terminal array. (PN261, PN282 are good examples). A Model 424 output terminal array is still required: to short some of the output terminals (Measure Lo to Out Lo, Measure Hi to Measure Lo, Out Hi to Out Lo, and of course Chassis Ground to Measure Lo). In addition, the termination provides actuation for the 10 kV range decimal point circuitry for those Programmers that require it.

TABLE 2-0

TERMINATIONS VS. PROGRAMMER NETWORK

| Programmer Network | Termination Required at Model 424 Output Terminal Array | Termination at Local Programmer Output When Applicable |
|---|---|---|
| PN 241-247 | Model 485 or 486 | |
| PN 247A | Model 489 | |
| PN 248 | Model 485 or 486 | |
| PN 249 | Model 487 | |
| PN 250-252 | Model 485 or 486 | |
| PN 253 | Model 490 | |
| PN 261 | Model 485 or 486 | |
| PN 281 | Model 488 | Model 485 or 486* |
| PN 282 | Model 488 | Model 485 or 486* |
| PN 286 | Model 488N | Model 485 or 486 |
| PN 291 | Model 485 or 486 (For minimum anomalies, alternately can use termination T291-300 for 300A range.) | |

NOTE: No 485 or 486 is required with Test Fixtures Model 450 or 451 as the equivalent network is built into the fixture in each case. If another termination is required for the Programmer involved, consult factory.

* Not necessary for circuit surging; primarily recommended for surging components.

This page left blank intentionally.

The special Type 482 jack is used in order to guarantee that there is no intermediate position for the plug, between fully removed and fully inserted, that will allow the unit to drop back into the "plug removed" situation. The Type 482 has a dead-contact ring that holds the internal telephone jack connections open once they have been opened, unlike standard plugs and jacks.

The Type 482 and its mating jack mounted on the Model 424 front panel are both military-type, heavy-duty units, with high mechanical stability and the connection advantages of gold-plating.

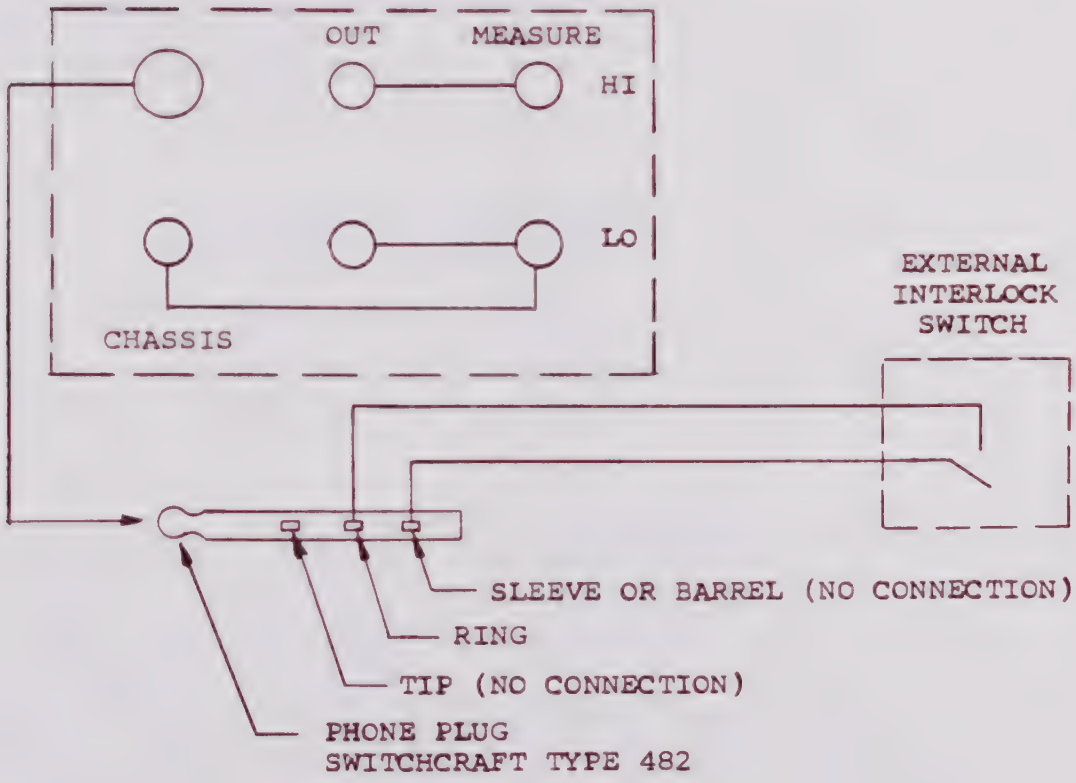


FIG. 2-5
EXTERNAL INTERLOCK
CONNECTIONS

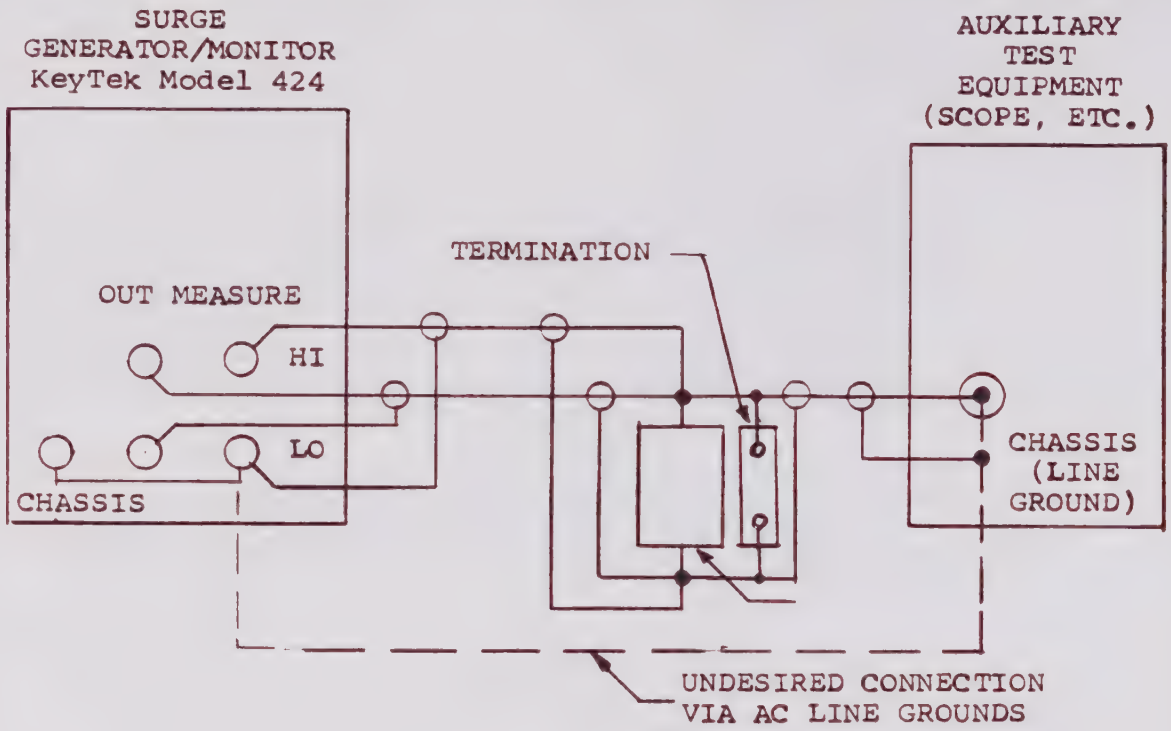


FIG. 2-6

STANDARD CONNECTIONS
AUXILIARY TEST EQUIPMENT
(SATISFACTORY FOR LOW CURRENT LOADS)

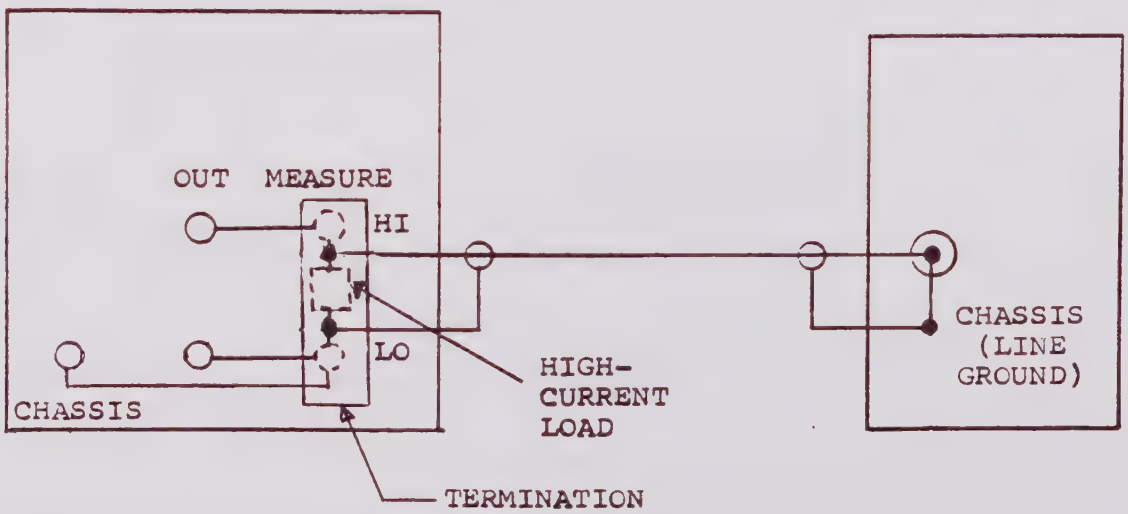


FIG. 2-7

PREFERRED CONNECTIONS
AUXILIARY TEST EQUIPMENT
(HIGH-CURRENT LOADS)

## 2.5 Operation: Generating and Monitoring an Output

### 2.5.1 Preliminary

1. Make sure the instrument is as level as possible from left to right, and within a few degrees of level from front to rear. Use of an optional tilt 'bail', attached under the instrument to elevate the front panel about an inch, is perfectly acceptable.

2. Make sure that voltage showing to the right of the ac line receptacle (within the sliding cover, slid to the left), is correct for the application: 100, 120, 220 or 240 volts; and that the fuse is sized accordingly. If there is any question in the matter, consult section 2.1.

3. Connect ac line cord to rear ac line connector and plug into 3-wire ac receptable.

4. Make sure a Programmer Network is fully plugged in.

5. Make sure a Programmer Network selector pushbutton is depressed.

6. Make sure the Measure Lo terminal is connected to Chassis Ground terminal, either at the panel, at the test fixture in use, or at the circuit under test.

Note

A connection exists between the Chassis Ground terminal and the shell of the optional Model 480 Adapter, the multi-pin connector that mates with the Model 424 output terminal array. There is no connection, however, in the Adapter between the Chassis Ground and Measure Lo leads. This connection should be supplied by the user at the unterminated end of the cable furnished with the Model 480 Adapter.

Note

The Measure Lo - Chassis Ground connection is built into the optional KeyTek Model 450 Component Test Fixture, at the output connector portion of the Model 450 assembly that mates with the Model 424 output terminal array. A connection is also included between Chassis and the shell of

the Test Fixture itself. Such a connection may not be built into other fixtures, however, and should be checked for and installed before turning on or operating the Model 424.

7. Make sure Out Hi is connected to Measure Hi, and Out Lo to Measure Lo, preferably at the device or system being surged, as described in section 2.4.3, Output Connections.

8. OUTPUT TERMINATION: Make sure that an output termination, KeyTek Model 485 or 486 for most situations, both supplied with the Model 424 as shipped, is connected across the Measure Hi - Measure Lo terminals. This termination, housed in a plastic case, is the series combination of a ceramic, 0.0011 ufd, 6 kV capacitor and a 27 ohm, 2W 5% carbon resistor. It provides reflection termination at the output terminals for the high speed waves involved. For the higher rate-of-rise waves it is a major portion of the wave generating network. Without it, the 10 kV/microsecond wave, for example, will give erroneous peak measurement results.

   Some special Programmer Networks require different terminations; the PN 249 requires the termination Model 487, for example, essentially .055 ufd and 2.7 ohms. Whenever a termination different from the 485 or 486 is needed, the Programmer Network front panel indicates the appropriate one to be used.

   When the optional Model 450 Component Test Fixture is in use, no separate termination is required for the Model 424, as it is built into the Test Fixture; except for the PN 249 Programmer Network, for which one should be added. No termination is built into the optional Model 480 Adapter plug and cable assembly, and one must be connected by the user.

SAFETY WARNING

In isolated situations, components being surged may fragment if they are improperly manufactured, or are misapplied for the surge energies involved. For this reason, components and circuits being surged should be covered to prevent hazard.

2.5.2 Operation*

1. Push upper half of the On-Off switch, turning the instrument on. The clear plastic switch front should light, confirming that power has been applied. Neither the Tilt/Power Interlock light directly above the On-Off switch, nor the Circuit Interlock light above the Set Voltage knob should be lit. The green Charge Ready light, directly between (+) and (-) Charge

*This section only deals with Programmers with outputs to 1500V. For ranging instructions for those Programmers like the PN 261 and PN 282 that supply higher peaks, see pertinent sections.

switches, should be on. If any of these three indicator conditions are not met, recheck all of the steps under 2.5.1 above. Also check for closure of whatever interlock switch arrangement may be in use at the device or circuit being surged. If the three indicatorconditions still are not met, consult section 4, MAINTENANCE.

2. Select the voltage range on which the output pulse is most likely to appear -- either 100V or 1 kV -- via the front panel push-button, voltage range selector. Note that the 100V range can and should be used up to 139.9V, for maximum accuracy; but will not be damaged by a full, 1500V surge if it is inadvertently applied. The 1 kV range will give readings within its full accuracy specifications down to 40V and up to 1599V although readings below 100V are specified as less accurate than those obtained on the 100V range. If the peak voltage clamp potential of the unit under test is relatively unknown, start with the 1 kV range. If a reading below 40V is obtained the display will blink, along with the Over/Under Range light, to indicate that the 100V range should be used for the next surge.

   Indication of selected range is given via the Range Indicators directly above the Voltage Monitor Coax output connector.

   If go-no go readings are desired, it is necessary to operate below the maximum digital limit switch setting: 99.9 or 999V on the 100 and 1 kV ranges, respectively.

3. No selection of peak current range display is necessary, as it is made automatically by the plug-in Programmer Network. Indication of selected range is given by the Range Indicators directly above the Current Monitor Coax output connector.

   NOTE: If Option I is supplied with the Model 424, then for some units selection of Current Monitor range is available on the front panel of the Programmer Network, via a bat-handle switch. In this event, (see Section 1.2.8), a current range should be selected that is appropriate to the expected readings. In particular, while the Model 424 can overrange to over 150% on all three ranges supplied when Option I is included -- 10, 100 and 1000A -- it should not be called upon to operate below about 10% of full range, if reasonable accuracies are desired.

4. If digital displays are desired for voltage and/or current, depress the corresponding Display On-Off push-push switches accordingly. For all Set-up and Engineering functions, these displays will be desired; for Production and QC testing of large numbers of components or circuits, they may be suppressed to avoid confusion with the Go/No Go indicators.

5. For each Go/No Go indicator in use, set the three-dial, digital Limit Switch specified pass-fail value. Often even for Engineering use, it is

convenient after initial set-up to turn off the digital Current Display and to use Current Go/No Go; to insure continuation of connection integrity, no unimportant matter at currents up to 500 amperes. Thus, if tests are at a nominal current of 40A, a setting of 35A, say, on the digital Current Limit Switch will give a green Go signal so long as the peak current equals or exceeds this figure.

If the Voltage Go/No Go is not in use, it may be desirable to set the Voltage Limit Switch to 999, so as to obtain green Go indications for most tests. (Primarily for units with Option P.)

6. Using the left hand, depress and hold down either the (+) or (-) momentary Charge switch depending on desired surge polarity. (There is no possibility of damage to the instrument, and no output is generated, if the switch is released at any time prior to pulsing the output.) The red High Voltage light above the output terminals should light.

7. Use the Set Voltage knob directly to the right of and slightly above the Charge switches, to set the peak open-circuit output voltage. It will be indicated on the analog meter directly above the Charge switches. If normal operation is desired, namely rated full-scale short-circuit currents and rates-of-rise for the specific Programmer Network being used, then set open-circuit voltage to the rated maximum Programmer voltage shown on the Programmer front panel. It will generally be either 1500 or 1000 volts. (For later Programmers, 2500 or 6000 volts as well.) See section 2.7 for different outputs.

Once positioned, the Set Voltage knob should not need readjustment with normally stable ac lines and for typical operation. If a high degree of line variation is anticipated, or if extremely high repetitive accuracy is being sought for a specific test situation, the meter reading should be rechecked periodically, since the high voltage is a direct function of ac line voltage. Alternatively, an external line regulator may be employed for extra-critical applications, as described in section 2.8.

Note

For rates-of-rise waves such as with Programmer Network PN 246 or with the

PN 241 in 1 kV/microsecond position, the peak open-circuit voltage displayed on the meter is the "plateau" reached prior to exponential decay, following an initial 15-30% overshoot and ring sequence at the start of the wave. The overshoot and ring are needed to provide linearity over the first 1000 to 1200V. Thus, the actual peak of the open-circuit wave may exceed the analog meter indication by 15-30%, resulting in actual open-circuit peaks in excess of 2000V for these modes.

8. Several seconds after depression of the (+) or (-) Charge switch, the green Ready light adjacent to the Pulse switch on the right side of the Programmer Network panel will light. To generate an output pulse, while continuing to hold down the selected Charge switch, use the right hand to depress the Pulse switch on the right side of the Programmer Network panel.

Note

If the Pulse switch is depressed more than about a second after the Charge switch but before the Pulse Ready Light is lit, the output pulse will still be generated. However, the built-in time delay still allows full charge of the internal storage capacitor. This prevents discharge of the capacitor before it reaches full voltage.

9. The digital and Go/No Go displays should register results of the output surge within a fraction of a second after depression of the Pulse switch, at which time both Charge and Pulse switches may be released.

For repeated surges, it is necessary to release the Charge Switch before resurging, until the Charge Ready light becomes relit. This insures the requirement for two-hand operation of the Model 424, since locking down a Charge Switch will not result in constant priming for Pulse switch operation.

10. If the Over/Under Range light is blinking, then one of three possible conditions exist:

A. The unit is on the 100V range and the peak voltage exceeded 139.9V. The digital display

will be blanked entirely. Change to 1000V range and repeat surge.

B. The unit is on the 1000V range and the peak voltage was less than 40V. A voltage reading will appear on the digital display, but it will blink to indicate it may be highly inaccurate. This may simply be due to the fact that a Programmer Network push-button has not been depressed. If this is the case, make the proper push-button selection. If a button is already depressed, however, then change to the 100V range and repeat the surge.

C. The unit is on the 1000V range and the peak voltage was greater than 1599V. The display will be blanked. This means that a rate-of-rise wave is being employed, and either a voltage limit greater than 1600V or else no voltage limit at all, is being supplied by the load. The result is that the full 15-30% initial overshoot characteristic of such waves, is being applied to the Model 424 measuring circuitry: which is therefore attempting to display a voltage over 2000V.

A second possibility is that a 1500V open-circuit plug-in programmer Network may be in use driving either an open-circuit or a device with voltage limit higher than 1600V. With the open-circuit voltage set to the highest it will go, namely 10 to 20% over the rated 1500V, an output peak greater than 1599V may result.

In either case, determine why the surge protector or circuit under test is incorrect or non-operational, and/or set the open-circuit voltage to the correct value.

11. If the Current digital display is blank, and the current push-button switch directly to the left of it is in the Display On mode (and not in Go/No Go): then the Model 424 is supplied with an advanced version of Option I, and the incorrect current range has been selected on the front panel of the Programmer Network in use. Switch to a higher current range -- i.e. from 10 A to 100 A, or from 100 A to 1000 A.

    By the same token, if the reading on the Current display is < about 1/10 of full range and Option I is supplied with the Model 424, then the Current Monitor range bat-handle selector switch on the Programmer Network should be down-ranged to allow more of an up-scale reading for higher accuracy; that is, go from 1000 A to 100 A range or from 100 A range to 10 A range as appropriate.

12. Repeat the surge as often as desired guided by the appearance of the Ready lights associated with the Charge and Pulse functions. The time delays built into the circuitry will provide operation up to at least 6 surges per minute; reduced to 2 or 1 per minute for the higher-energy Programmers.

13. Use of the Monitor Outputs: For monitoring either the voltage sensed at the load or the current flowing through the load, connect a unity-gain probe to either the Voltage Monitor or Current Monitor coax connector respectively. FOR PROPER RESULTS, see section 2.9, Applying the Model 424, for suggestions on probes, coax,

This page left blank intentionally.

grounding, oscilloscopes, baluns and other pertinent aspects of high pulsed-energy measurements. (Note: Voltage Monitor output is not recommended for use with rate-of-rise waves.)

## 2.6 Measure Circuitry Input Impedance

The Model 424 has provision for measuring chopped impulse waves for rates-of-rise to 10kV/microsecond, implying rise times of 100 nsec for a 1 kV wave, or 10 nsec for a wave limited at 100V. These waves are measured with peak detector lags of only a few nanoseconds. Corresponding frequency responses range to well over 100Mhz.

Accordingly, relatively low input impedances are required at the Measure input terminals, along with built-in coaxial attenuators, baluns and appropriate shielding, to obtain high peak measuring accuracies. In consequence, input impedance on the 1 kV range is 10 K and on the 100V range, 1 K. These are low in comparison with input impedances used with dc and audio frequency digital voltmeters, but are unusually high in comparison with the 50 ohms usually associated with the field of high-speed measurements.

## 2.7 Different Full-Scale Currents and/or Rates-of-Rise

There are two basic types of wave generated by the variety of Programmer Networks available for use with the Model 424 Surge Generator/Monitor. The first is the essentially exponential open-circuit voltage waveform with almost identical short-circuit current, such as the so-called 8 x 20, the 10 x 1000 and so on. In each case, the first figure is the virtual front time, while the second is the virtual time to decay to half of peak value.

For impulse waves such as these, typical Programmers provide a number of short-circuit current ranges, for use with a variety of protector devices and circuits. The PN 242 Programmer for the 8 x 20 impulse, for example, incorporates push-button selection for full-scale short-circuit ranges of 500, 200, 100, 50 and 20 amperes. Since the PN 242 provides a 1000 volt nominal full scale open-circuit voltage, the five current ranges imply 2, 5, 10, 20 and 50 ohm output impedances corresponding respectively with the 500, 200, 100, 50 and 20 ampere full-scale short-circuit current ranges.

If a full-scale current is desired that is different from a nominal full-scale figure selectable by one of the switch positions, it may be obtained by using the Set Voltage knob with Charge switch depressed, to set the peak open-circuit voltage to something less than nominal full-scale. Thus, for 30 A to be supplied to a low-voltage surge-rated zener, for example, the 50 A switch position would be selected on the PN 242 and the peak open-circuit voltage set to 30/50 of 1000V, or 600V. Additional details are given under section 2.9, Applications, for testing protectors that limit at higher

voltages, as well as gas-tubes and other breakdown devices.

Although far less likely to be needed, rates-of-rise are obtainable that lie between those selectable by the push-button switches on such Programmers as the PN 245 and PN 246. For example, 200V/microsecond can be obtained by setting the open circuit voltage to 2/5 of the rated 1500V, or to 600V, with the Programmer switch set to 500V/microsecond. However, the open-circuit voltage will only be linear to about 420V, 70% of the open-circuit voltage setting. This may or may not be a disadvantage in the application. Thus, intermediate settings for rate-of-rise Programmers should be used only with consideration of all factors involved.

## 2.8 Use of Line Voltage Regulators with the Model 424

All of the internal measuring circuitry of the Model 424 is operated from electronically regulated supplies, capable of providing full rated accuracy over and beyond the specified ± 10% line voltage variation. However, the high voltage that supplies the output pulse is directly related to the ac line. If unusually high line fluctuations are anticipated, or if extra-repeatable peak open-circuit output surge voltages are desired, an ac line voltage regulator may be employed ahead of the Model 424.

In such cases, it is important that an essentially sinusoidal rather than a square wave shape be supplied to the Model 424 ac line input. A ferroresonant magnetic regulator is recommended, in view of the rather high ac line current drawn during capacitor charging. Only a regulator of the so-called harmonic rejecting type, meaning sinusoidal output, should be used.

A rating of at least 750W is suggested for the regulator, primarily to handle the 10 A capacitor-charging inrush current. One acceptable type is the Sola Model 23-25-175 with Kit 999-020, for 60Hz operation. For 50 Hz, Sola type 23-25-710 (no Kit available) is recommended. No matter what regulator is employed, make sure that the full three-wire ac line connection is used, that the ac line ground connection is carried through the regulator, and that it also grounds the regulator case.

## 2.9 Applications

The Model 424 design makes possible impulse testing with little background in pulse technology, particularly if the optional, Model 450 Component Test Fixture is also incorporated into what then amounts to a 'turn-key' system. Nevertheless, each branch of technology has specific application requirements, and high-speed, high-power pulse measurements are no exception.

Applications information is given in this section for some typical specific measurement situations.

2.9.1 Measuring High-Speed, High-Power Pulses: Grounds, Oscilloscopes, Baluns, Coax

1. Grounds

Output ground connections were covered under sections 2.4.3 and 2.4.4. Summarizing here,

A. The ac line third wire connection is connected to the Model 424 case, and to the front panel Chassis Ground terminal. It should be connected to the Measure Lo terminal, for personnel safety; either at the Model 424 or at the load.

B. Cut Lo and Measure Lo must be connected, again, either at the instrument or, preferably, at the load. If they are not, the internal circuit interlock will inhibit Charge and Pulse generation (unless oscilloscope ground is incorrectly connected -- see (C)).

C. Auxiliary equipment such as an oscilloscope should be connected either to one of the two Model 424 Monitor coax outputs (for peak voltage or current); or if measuring directly at the load, it should be tied to the low end of the load at the Measure Lo connection.

2. Oscilloscopes, Baluns

When high voltage, high-speed edges are involved, such as those occurring with discharge of a gas-tube surge protector, energies of tens or hundreds of joules may be discharged in nanoseconds. The resulting energy radiation spans the entire electromagnetic spectrum covered by modern oscilloscopes. Of greatest concern are common-mode effects, or the effects on one "ground" with respect to another. Thus, both high and low connections to an oscilloscope used to measure the output of a high-speed pulse generator may momentarily surge by hundreds of volts with respect to the pulse source, due to inductance in the leads at the high frequencies involved. This large common-mode signal becomes partially converted to normal-mode or just plain high-to-low signal on its way to or at the oscilloscope; merely by normal unbalance in capacitance on the high and low scope input lines.

The Model 424 includes rf suppressors, termed 'baluns' or 'coaxers', in appropriate portions of the internal measuring circuitry and in the Voltage Monitor and Current Monitor output lines. These help make accurate measurements possible in spite of the high common-mode surge signals involved. Hence, under normal circumstances no external precautions of a special nature are required to apply the instrument to device or circuit measurements. However, when external monitoring equipment such as oscilloscopes are used, additional precautions may still have to be taken to be sure of getting correct readings.

Traditionally, so-called 'surge' oscilloscopes have been used to measure pulses of the kind generated by the Model 424. These oscilloscopes are essentially conventional scopes with extremely low-gain Y-axis input amplifiers, or none at all. Sensitivities are typically 10 to 50 volts per centimeter or even lower. Thus the 5 to 10 millivolt/cm high-gain amplifiers that are typical of modern general-purpose oscilloscopes, and that are often sensitive to rf generated by fast, high-power pulses, aren't used at all. The result is the ability to get clean, 'splash-free' displays.

Circumstances make it desirable to measure with more conventional instrumentation oscilloscopes, however. For one thing they are more available, and even with high-speed storage performance, so that awkward, one-shot photography is no longer necessary for many waves. In addition, some devices to be tested have low-voltage performance themselves. Low-voltage surge-rated zeners are available down to 6.8V, and power diodes range to 1.5 to 2 V under surge conditions. Monitoring their performance with a sensitivity of only 50V/cm isn't possible; and providing a different scope for each surge application may not be a practical solution.

Fortunately, newer techniques make surge scopes unnecessary for pulses with the speed/power combination of those generated by the Model 424. Fine storage scopes are available with so-called EMI options -- shielding, line filtering and so on, made available by the oscilloscope manufacturers for reasonable additional cost. (The more compact, portable versions of these scopes may not have rf immunity equalling that of the laboratory, plug-in models, however.)

And finally, use of additional baluns or coaxers external to the Model 424 and acting essentially as rf 'stops' in the common-mode signal circuit, can provide an extra order of rf rejection. A balun --

abbreviation for balanced/unbalanced as derived from telecommunications technology -- is also a coaxer, since it is often built by winding a single coax cable around a magnetic core. The principle is simple introduction of like inductances in the high and low leads connecting two pieces of instrumentation, without affecting the signal transmitted on the high lead with respect to the low lead. The effect is to introduce a high common-mode impedance between the two instruments. If one entire instrument then experiences a high rf surge with respect to the other, the transmitted signal will tend more to be only the desired, 'normal' mode or high-to-low signal. If not for the balun, a larger common-mode or ground-to-ground signal between the two instruments would be available to be converted to normal mode, via the input or other circuits at the receiving instrument.

Fig. 2-8 shows baluns of two types. The first consists of two separate, wound coils on the same core. The second, far preferable, is a coaxer version. The explicit balun of Fig. 2-8 (a) is wound on a toroidal core, with one winding for the high and a second for the low side of the signal to be transmitted. Because of the winding directions, there is no net core flux density for normal, or line-to-line signals; but for signals common to both lines the two 'chokes' are in parallel, and constitute a high-impedance stop. The degree to which the two chokes are alike determines the extent to which the normal signals will be unaffected by the balun.

To obtain baluns with nanosecond fidelity requires a match between the two windings that is unavailable with the winding techniques of Fig. 2-8 (a). Instead the coaxer or coax version shown in Fig. 2-8 (b) is used. A coaxial cable whose center conductor carries the high side of the signal and whose shield carries the low or return, is wound around a toroidal core. The excellence of the coaxer is based on the fact that there is virtually no field external to a piece of coax for equal signals flowing in opposite directions in center conductor and shield. Coaxers of the type shown in Fig. 2-8 (b), with from ten to thirty turns, can provide significant reduction in common-mode loop couplings while passing nanosecond pulses or edges with great fidelity.

As mentioned, the Model 424 includes baluns in Monitor outputs for both voltage and current. This is appropriate for the levels involved, essentially 5 volts full range. However, additional rf 'splash' rejection can be obtained by locating coaxers right at the oscilloscope inputs, rather than the few feet

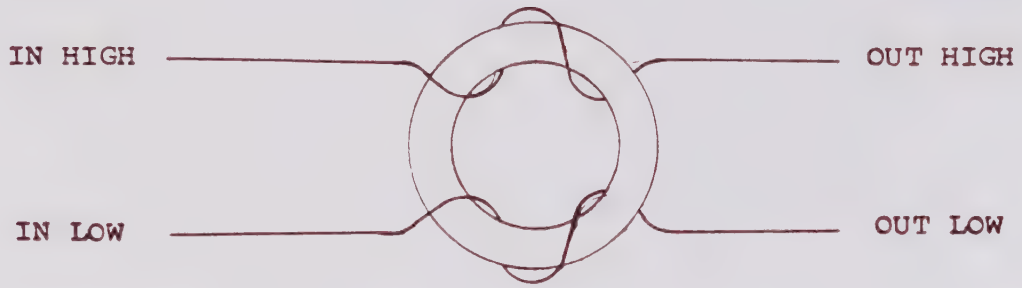


FIG. 2-8(a)
EXPLICITLY-WOUND BALUN

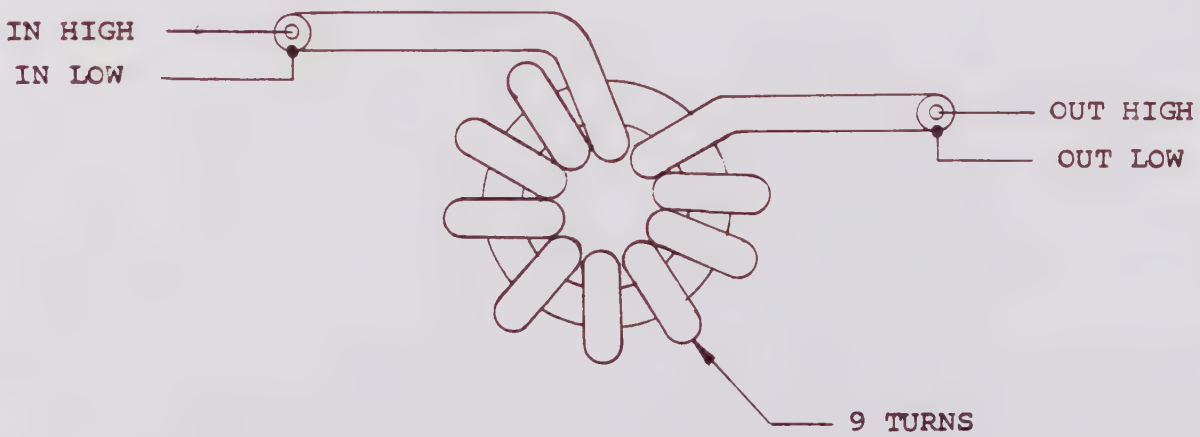


FIG. 2-8(b)
COAXER, OR COAX FORM OF BALUN

away that the built-in Model 424 coaxers are located. An effective coaxer can be made by winding the input lead of a typical oscilloscope probe around a ferrite core. This is often just as necessary for higher-attenuation probes, since the signal levels after the probe head are typically 50 or 100: 1 reduced from actual signals to be measured. Again, attenuated levels are of the order of a few volts.

Different core materials can be useful for coaxers. Ferrite is often good,and tape-wound permalloy or supermalloy, of the 1-mil or 2-mil variety can also be effective. Fig. 2-9 shows photographs of typical coaxers. Fig. 2-9 (a) shows a ferrite core, Ferroxcube type 528T500/3C8, used with about 12 turns of a coax line from the Voltage Monitor output from the Model 424. Fig. 2-9 (b) shows a larger core, Ferroxcube type 400T750/3C8, used with a 10-foot, 50:1, 1000V Model 10002B HP scope probe. The larger core was necessary to allow winding the coax connector through. Approximately 10 to 15 turns were used.

Coaxers are not a cure-all and may be of little help if problems lie elsewhere. But they can be of major help in some instances, and are worth trying in difficult situations. One test of whether they will do any good is to connect both high and low ends of the monitoring scope to the low end of the signal to be monitored, as shown in Fig. 2-10 (a): then generate the pulse. If the scope shows a relatively large excursion compared to the signal to be measured, then a coaxer may well work. A further check is to connect the scope probe high to low at the location where the signal is to be measured, but do not connect either to the signal source itself -- just keep the probe nearby, as shown in Fig. 2-10 (b). Then generate the pulse, and see what the scope shows. If it still shows the same signal it did in the first test, the problem may lie elsewhere: possibly line coupling, rf sensitivity or another effect. But if the signal it now shows is much reduced from the previous test, the trouble is probably common-mode or ground coupling, and a coaxer may help reduce it.

In any event, in high-power pulse work total signal purity is probably neither necessary nor possible, using more-or-less conventional oscillography. What is needed is signal-handling with low enough noise to give adequate understanding and accuracy for the test work involved.

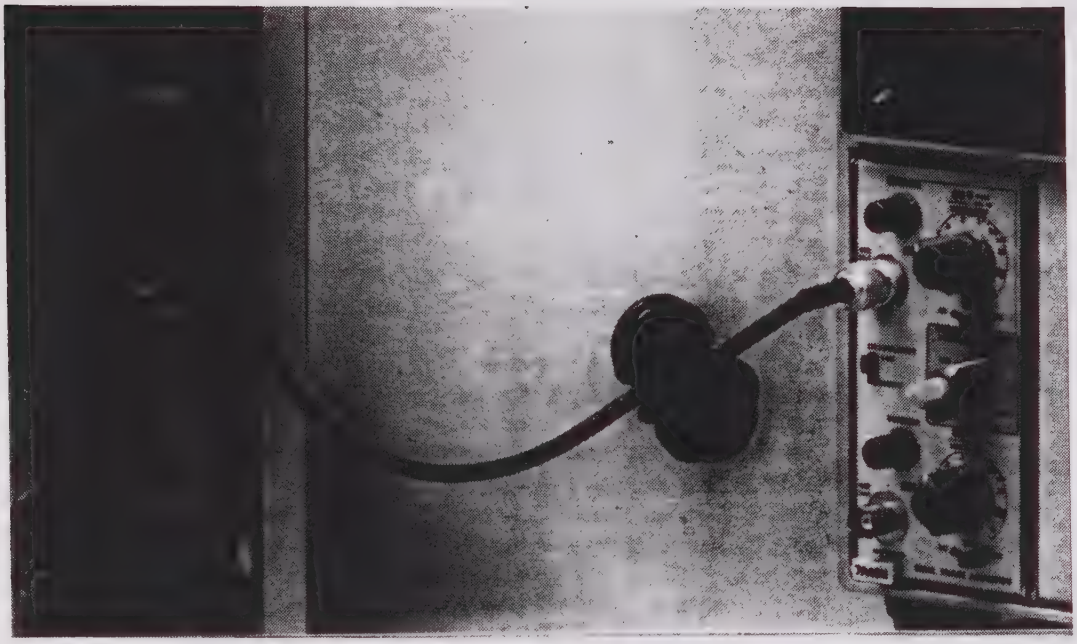

FIG. 2-9(a)
COAXER IN LINE FROM VOLTAGE
MONITOR OUTPUT TO OSCILLOSCOPE

FIG. 2-9(b)
COAXER IN OSCILLOSCOPE
PROBE CABLE

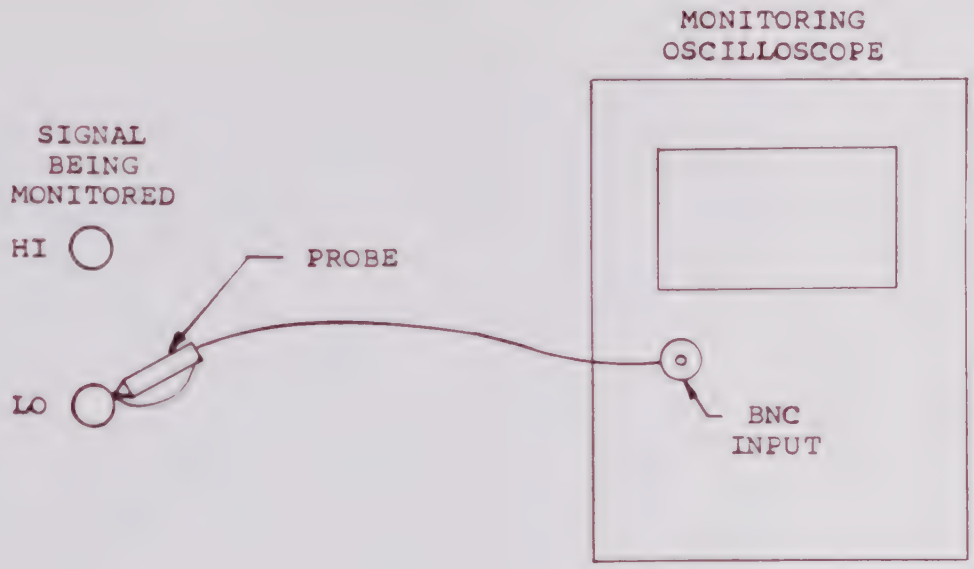


FIG. 2-10(a)

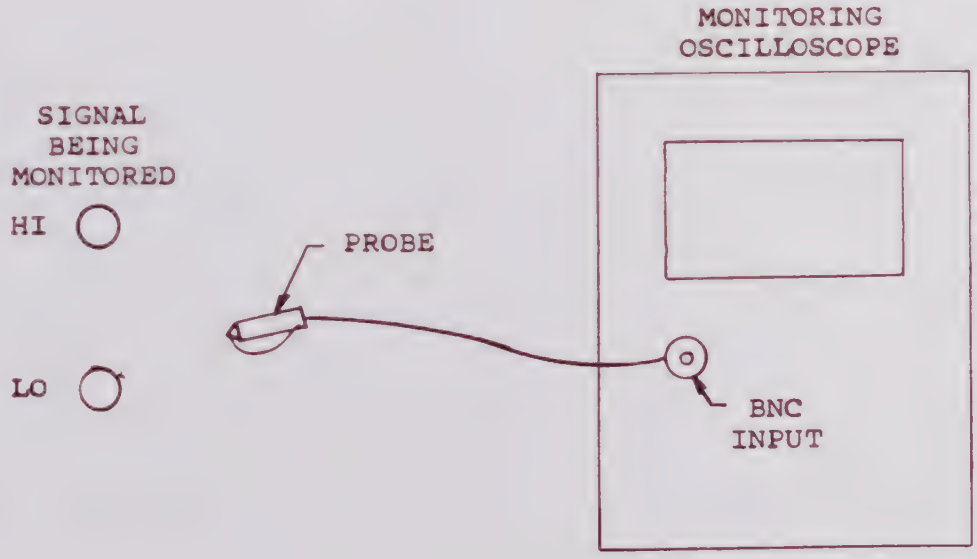


FIG. 2-10(b)

FIG. 2-10
DETERMINING NEED FOR COAXERS

3. Oscilloscope Errors

When a linear ramp like the kind generated by a rate-of-rise Programmer Network is applied to any device or network including an oscilloscope, the device output -- or oscilloscope display -- will lag the input. For simple lag networks typical of most scope vertical amplifiers, the lag is equal to the network -- or scope amplifier -- time constant.

The effect can result in substantial measuring errors at higher rates-of-rise. At 10kV/usec, for example, a traditional Surge Scope like the Tektronix 507 with a 10 nsec rise time will read 45V low on gas-tube chopped impulse waves. This follows since at 10kV/usec, the scope input travels 100V in 10 nsec; and when the chop occurs, the display lags by one time constant. At 20kV/usec, the error will be 90V; at 5kV/usec, 22V, etc.

The Tektronix 7633 storage scope with 7A18 vertical plug-in, as another example, has a 4.7 nsec rise time, hence, at 10kV/usec it will read low by only about 21V. Of course, faster scopes are available, but their rise times versus the actual rate-of-rise for the chopped impulse waves being measured must still be taken into account for highest oscilloscope measuring accuracy on waves of this type.

4. Coax

The kind of coax used in making monitoring connections external to the Model 424 may itself be of importance, since ordinary coax with single braid provides only 96 to 98 % "coverage" or shielding, giving excessive high-frequency surge impedance. More effective at the higher rf noise frequencies, is either the kind of coax that uses a wound aluminum foil shield (with running 'drain' wire), or RG-55B/U, a readily available double-braid substitute for RG 58. While its characteristic impedance is 53 rather than 50 ohms, the difference is of no real significance in the application; and it may be terminated into standard BNC coax fittings.

2.9.2 Testing Gas-Tube Protectors; Typical Waveforms

For details on output connections, See section 2.4.3.

Gas-tube protectors respond differently to waveforms depending on wave rate-of-rise, hence, they are one class of component for which the rate-of-rise plug-in Programmer Networks (including the PN 245 and PN 246) were designed. (Carbon-block arresters are also rate-of-rise dependent, and other protectors

turn on or limit with delay times that can be checked using rate-of-rise waves).

On the other hand, many specifications relating to gas-tube protectors call for other waves for particular tests, specifically the 8 x 20 and the 10 x 1000.

Currents to be used with the gas tubes, unless test-to-destruction is desired, need not exceed 10 to 20 amperes. Rate-of-rise Programmers are typically supplied with 40 to 50 amperes short-circuit current, enough to insure dropping fully into the arc mode, rather than staying in the glow mode. (Glow occurs at a higher voltage level which, since it implies higher dissipation, can cause early failure.) When using a plug-in with selectable short-circuit current, not less than 10 amperes should be used.

Since gas tubes break down at 250 to 1000 volts for rates-of-rise from 100 to 10,000 volts/microsecond, use of Kelvin or four-wire output connections isn't too important. Even at 50 amperes, 20 or 30 milliohms imply only a volt or two, constituting a small percentage error with respect to the peak to be measured. However, if four-wire connections are used, care should be taken to run Out Hi/Out Lo as a twisted or preferably shielded (coax) cable, completely separate from Measure Hi/Measure Lo (run similarly). This will minimize loop coupling between the two, and hence, reduce chance of resulting error in the Model 424 peak voltage measurement.

Gas tube voltage in the arc region drops to a few tens of volts. It can therefore be considered negligible compared with the full-range, open-circuit Model 424 output voltage -- 1000 or 1500V, depending on plug-in. Thus, the Model 424 can be considered essentially a current source in driving protectors of this kind after breakdown, while it is essentially a voltage source before breakdown.

Figs. 2-11 through 2-13 show typical gas protector waveforms, driven by specific rate-of-rise waves. Since gas tubes are statistical in performance, a given tube may strike at different potentials for the same applied wave. Performance can also be a function of the number and kind of previous strikes, ambient light conditions and so on. Some protectors will repeat readings within a few volts or tens of volts; others will offer singular readings that may differ by hundreds of volts from the average.

Figs. 2-11 (a) through (c) show a gas tube driven with a 1 kV/microsecond rate-of-rise from a PN 246 Programmer Network. Differences in striking potential among the three tests are due to the tube itself. Fig. 2-11 (d) shows current through the tube after it strikes. Measurement is made via the Current Monitor

(a)
Voltage Wave
Test #1
100 V/small division
100 nsec/small division

(b)
Voltage Wave
Test #2
100 V/small division
100 nsec/small division

(c)
Voltage Wave
Test #3
100 V/small division
100 nsec/small division

(d)
Current After Striking

5 A/small division
100 usec/small division

FIG. 2-11

TYPICAL GAS TUBE VOLTAGE AND CURRENT WAVES
1 kV/usec

(a)
0.1 kV/usec

100 V/small division
500 nsec/small division

(b)
0.5 kV/usec

100 V/small division
200 nsec/small division

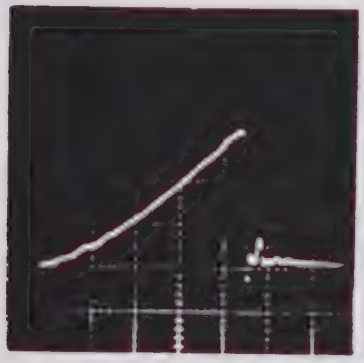

(c)
5 kV/usec

100 V/small division
20 nsec/small division

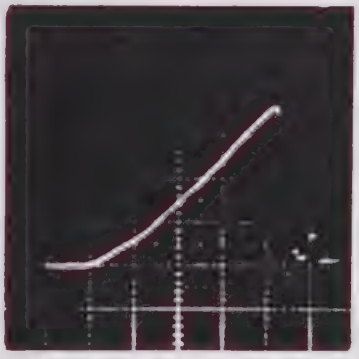

(d)
10 kV/usec

100 V/small division
10 nsec/small division

FIG. 2-12

TYPICAL GAS TUBE VOLTAGE WAVES
AT 0.1, 0.5, 5 AND 10 kV/usec

(a)
100 V/usec

100 V/small division
500 nsec/small division

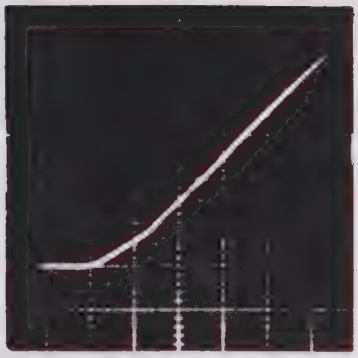

(b)
10 kV/usec

100 V/small division
10 nsec/small division

(c)
100 V/usec

200 V/small division
5 usec/small division

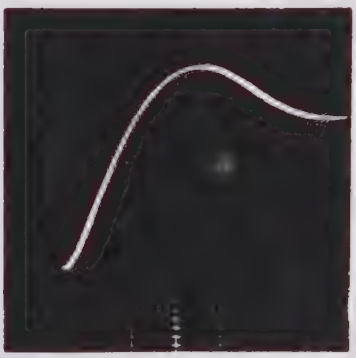

(d)
10 kV/usec

200 V/small division
50 nsec/small division

FIG. 2-13

OPEN-CIRCUIT RATE-OF-RISE WAVES
0.1 AND 10 kV/usec

output on the Model 424. The current wave does not have its start until the gas tube strikes, since there is no current flow prior to that time. While neither the post-breakdown voltage or current waveform is of any real interest, they are shown to give an indication of typical waveshapes.

Figs. 2-12 (a) through (d) show the same gas tube protector, driven by 100V/usec, 500V/usec, 5kV/usec and 10kV/usec rates-of-rise from the same PN 246 Programmer Network. While a statistically significant number of pulses would have to be used at each rate for a meaningful numeric comparison, the waveforms show the Model 424's capability to display the well-known increase in gas-tube surge breakover with rate-of-rise.

Figs. 2-13 (a) and (b) show the open-circuit waves with no gas-tube in circuit generated by the Model 424 at 100V/usec and 10kV/usec. Scales are the same as for Figs. 2-11 and 2-12. Figs. 2-13 (c) and (d) show the same two open-circuit waves on a less sensitive scale, to display the full ringing waveforms with peaks on the order of 2kV, generated by the Model 424 with rate-of-rise Programmer Networks. These waveshapes are used to provide good linearity up to 1000 to 1200V.

It may be noted that there are additional 'wrinkles' or small, high-frequency perturbations on the linear-ramp portion of the gas-tube chopped 10kV/usec impulse wave of Fig. 2-12 (d), compared to the cleaner wave obtained on an open-circuit basis in Fig. 2-13 (b). The difference lies in the rfi or radio-frequency interference introduced into the Tektronix Type 7633 Storage oscilloscope used for the photographs, in spite of its EMI filtering kit and the Model 424's internal coaxers. These small 'wrinkles' have no significant effect on the readability of gas-tube firing potential. However, oscilloscopes or other measuring set-ups that have still greater rfi sensitivity can show larger perturbations, which may begin to adversely influence scope readability for striking potential.

A point of interest is that the interference may occur prior to gas-tube breakdown, as though the circuit has advance knowledge that the tube is about to strike. This apparent anticipation is a result of normal scope trigger delay, used to retard the signal until the sweep has begun. This delay is on the order of 50 to 100 nsec for typical scopes, on the same order as sweep time for a 10kV/usec wave of 500 to 1000V amplitude. Thus, the wave is shown on the screen at about the time the gas tube is striking, generating a maximum of rfi during actual display time.

### 2.9.3 Testing Varistors and Avalanche Protectors; Typical Waveforms

For details on output connections, See Section 2.4.3.

Presently, available varistors span the range from about 40 to over 1000 volts. Like gas tubes, at the higher voltages they also do not really need Kelvin, four-wire connections. But at the 40 to 100 volt level, particularly at the higher currents for which newer units are being introduced, Kelvin connections are necessary for accurate results.

Avalanche protectors are available with nominal clamping potentials from 6.8 to 200 volts. The same considerations apply as for varistors, with particular emphasis on use of Kelvin connections for the lower voltage, higher current devices. 500 amperes via a two foot length of #16 wire, taking into account both high and low lead drops, will give an error of 8 volts. Proper use of four-wire connections can eliminate thi huge measurement error.

Unlike gas-tubes, where voltage drops are only tens of volts after striking into the arc region, varistors and avalanche protectors do not break down. They limit, and therefore withstand full surge current at the limiting voltage. Also of interest is their turn-on times, which can be obtained via monitoring oscilloscopes. These are usually a small fraction of a microsecond, and typically result in a few per cent overshoot. The full peak, including this overshoot, is measured by the Model 424.

When testing higher-voltage limiting devices, currents displayed on the Model 424 readouts are lower than the rated full-range (or short-circuit) currents selected via Programmer Network push-button switches. This occurs since it is the difference between the open-circuit Model 424 output peak, and the measured device clamping voltage, that 'drives' the Model 424 series output resistor, as shown in Fig. 2-14.

Thus, the operator must set a particular peak open-circuit voltage to verify that a device is clamping below an acceptable limit at a specified current. Table 2-1 gives output resistance, R. for each Programmer Network. The required peak open-circuit Set Voltage, $V_{set}$, is obtained by multiplying the desired minimum test current I times the resistance R, from the table. Then add the maximum allowable clamp voltage at that current, $V_{maximum}$. Thus:

$$V_{set} = (I_{minimum} \times R) + V_{maximum}$$

The above "load-line" program will not pass faulty devices, even though the currents as measured by the Model 424 will, for good units, typically be <u>higher</u> than the minimum current at which the test is valid, just as the clamp voltages will generally be <u>lower</u>.

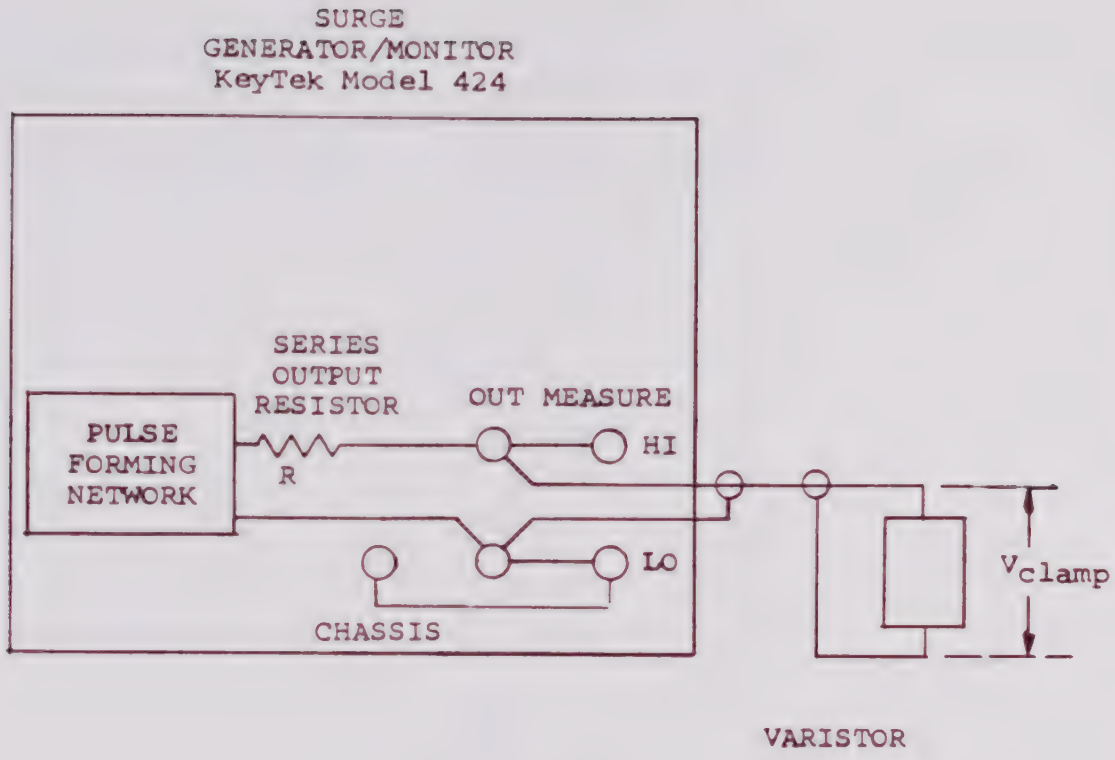


FIG. 2-14
SURGE-DRIVEN VARISTOR

Output from the pulse-forming network is isolated from the Model 424 load via internal, series output resistor R. Both the network and R are located within the plug-in Programmer Network, and R is push-button selectable for many of the Networks.

Under short-circuit conditions, output current is determined by open-circuit voltage and R. However, for a protector with non-zero clamping voltage $V_{clamp}$, current is open-circuit voltage less $V_{clamp}$, divided by R.

In practice, output current may be read from the Model 424 digital peak current display to verify actual operating conditions.

TABLE 2-1

PROGRAMMER NETWORK OUTPUT RESISTANCES

| Programmer Network | Switch-Selected Current | Equivalent Output Resistor R |
|---|---|---|
| PN 241 | 60 A | 25 ohms |
| | 15 A | 100 ohms |
| PN 242 | 500 A | 2 ohms |
| | 200 A | 5 ohms |
| | 100 A | 10 ohms |
| | 50 A | 20 ohms |
| | 20 A | 50 ohms |
| PN 243 | 500 A | 3 ohms |
| | 200 A | 7.5 ohms |
| | 100 A | 15 ohms |
| | 50 A | 30 ohms |
| | 20 A | 75 ohms |
| PN 244 | 500 A | 2 ohms |
| | 200 A | 5 ohms |
| | 100 A | 10 ohms |
| | 50 A | 20 ohms |
| | 20 A | 50 ohms |
| PN 245 | 40 A | 37.5 ohms |
| PN 246 | 50 A | 30 ohms |
| PN 247 | 2000 A | .75 |
| PN 247A | 2500 A | .6 ohms |
| PN 248 | 200 A | 7.5 ohms |
| | 100 A | 8 ohms |
| PN 249 | 1500 A | .53 |
| | 500 A | 1.6 ohms |
| PN 250 | 250 A | 6 ohms |
| | 100 A | 10 ohms |
| PN 251 | 500 A | 3 ohms |
| PN 252 | 45 A | 22 ohms |
| PN 253 | 150 A | 10 ohms |
| PN 261 | 200 A | 50* ohms |
| PN 281 | 200 A | 50* ohms |
| PN 282 | 1000 A | 2.5 ohms |
| PN 283 | ~ 100 A | ~ 50 ohms |
| PN 286 | 50 A | 65 ohms (60 for .1 kV/usec) |
| PN 291 | 300 A | 4 ohms |
| | 100 A | 12 ohms |
| | 30 A | 40 ohms |
| | 10 A | 120 ohms |
| | 5 A | 240 ohms |
| | 1 A | 1200 ohms |

* In parallel with approximately 50 uH.

As an example, suppose it is desired to test a varistor whose specs guarantee 400 volts maximum clamping voltage at 20 amperes. The Pn 242 is selected as an appropriate short-pulse generator. The next range up from the desired 20 ampere current will be used, namely 50 A. As indicated in Table 2-1, R is 20 ohms for the PN 242 on this range. Multiplying R=20 by the desired current of 20 amperes yields 20 x 20 or 400V; adding the clamp spec voltage of 400V yields 800V for the generator open-circuit Set Voltage. Peak open-circuit voltage can be set to 800V for the whole run of devices to be checked under these conditions. If the Go/No Go indicator for voltage, with limit set at 400V reads "Go", the devices will be meeting their surge specifications.

For lower-voltage varistors and for most avalanche protectors of interest, the clamping voltage is low -- less than 50V. For this situation, an open-circuit potential of 1500V implies

almost complete independence from the 'load-line' effect just described for higher-voltage devices. However for the smaller percentage of avalanche protectors at the 150 to 200V level, the same considerations apply as for higher-voltage varistors.

Figs. 2-15 and 2-16 show some typical varistor and avalanche protector waveforms, for 8 x 20 and 10 x 1000 waves chosen as representative. Fig. 2-15 (a) shows an open-circuit 8 x 20 wave from the Model 424 with PN 242 Programmer Network. Fig. 2-15 (b) shows the same 8 x 20 wave, with 500 A short-circuit current selection, clamped by a 130V (ac rms) varistor. Actual peak current is 275 amperes. The current wave, recorded by the scope via the Model 424 Current Monitor output on the next shot, is shown as the exxentially 8 x 20 wave superimposed in the same photo. Fig. 2-15 (c) shows the 8 x 20 wave again clamped by a varistor, for three different short-circuit current selections (made via the Programmer selector switch) -- 500, 100 and 20 amperes, showing the 'stiffness' of the varistor. The higher currents correspond respectively with the higher voltage clamp levels. Actual measured currents were 268, 64 and 13 A for the three shots, respectively.

Fig. 2-16 (a) shows an open-circuit 10 x 1000 wave from the Model 424, using the PN 241 Programmer Network. Fig. 2-16 (b) shows the same 10 x 1000 wave, with 15 A short-circuit current selection, clamped by a 33V avalanche protector. The current wave, displayed on the scope via the Model 424 Current Monitor output on the next shot, is shown as the essentially 10 x 1000 wave superimposed in the same photo. Fig. 2-16 (c) shows a 1 kV/usec wave from the same Programmer, supplying a 60 A, 10 x 1000 short-circuit current wave, clamped by a 6.8 V avalanche protector. The 10 x 1000 current wave is shown in the same photo.

Last, Fig. 2-16 (d) shows an 8 x 20 wave from the PN 242 again, clamped by the 6.8V avalanche protector. Peak current (not shown, to avoid confusion) is 500 A. The portion of the wave following the decay to zero is made up of two sections: a clamped under-shoot, and a small, unclamped overshoot. The 8 x 20 wave network generates an undershoot on the order of several per cent of peak, on return to baseline. For the PN 242 with 1000V open-circuit waves, this would constitute a 20 to 30 volt undershoot. However, since the avalanche protector functions like an 'ordinary' diode in the reverse direction, it clamps this undershoot to the flat, approximately minus one-volt level shown. Following return to zero, there is a two or three volt overshoot, which does not rise high enough to re-engage the avalanche protector's breakdown potential. Thus, the wave shown is perfectly normal, with the under- and overshoot having no effect on measurement of the avalanche protector's peak clamping performance.

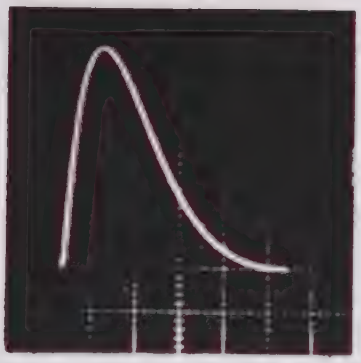

(a)
Open-Circuit 8x20 Wave

100 V/small division
5 usec/small division

(b)
Varistor Voltage (Clamped)
and Current (8x20)

100V, 40A, 5 usec/small division

(c)
Varistor Voltage (Clamped)
(500, 100, 20 A Short-Circuit
for Upper, Middle, Lower Waves)
40V, 5 usec/small division

FIG. 2-15

VARISTOR VOLTAGE AND CURRENT WAVES
8x20 WAVEFORM

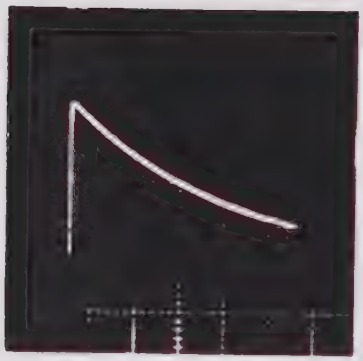

(a)
Open-Circuit 10x1000

200 V/small division
200 usec/small division

(b)
33V Avalanche Device
Voltage (Clamped)
and Current (10x1000)
4V, 2A, 1 msec/small divisi

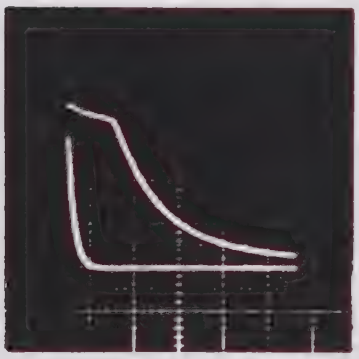

(c)
6.8V Avalanche Device
Voltage (Clamped)
and Current (10x1000)
1V, 10A, 5 msec/small division

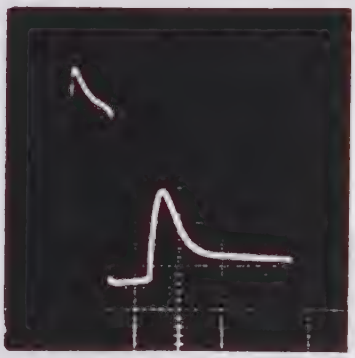

(d)
6.8 Avalanche Device
Voltage for 500A,
8x20 Current Wave
1V, 20 usec/small division

FIG. 2-16

SILICON AVALANCHE DEVICE VOLTAGE AND CURRENT WAVES
10x1000 AND 8x20 WAVES

### 2.9.4 Testing RLC Surge-Suppression Networks, Passive Circuits, Systems

One of the applications for the Model 424 is in test of RLC surge-suppression networks, which can sometimes be used to good advantage either in conjunction with or in replacement for gas-tube or semiconductor protectors. Since the output of the 424 is essentially resistive for all but the fastest rate-of-rise waves, it can be used to drive such RLC networks.

Each RLC surge-suppression network may be different. Even more varied will be the full range of diverse and highly complex circuits which incorporate protectors and/or suppressors of any type, and systems incorporating those circuits. Surging any of these passive, complex arrays is possible using the Model 424, due to its essentially resistive output.

It is just a short step from testing surge-suppression networks to passive (or Power Off) surge testing of complex circuits. However, measuring surge or impulse withstand performance for complete circuits can require additional experiment design beyond what is needed for testing protectors alone. For one thing, the Model 424 Measure input impedance is low, so as to provide wide bandwidth for catching short peaks; as already covered in Section 2.6. It is 10 K on the 1000V range, 1 K on the 100V range. If the effect of these impedances is of interest in connection with a specific circuit under test, scope measurements can be made at the circuit point involved. Measure the results of the Model 424 output surge, both with and without the Model 424 Measure terminals connected to the point in question in the circuit under test, to note any resulting difference. If it is slight, then the Model 424 Measure results may be used directly. If it is significant, then Model 424 Measure results should be calibrated via load/no load scope performance. In either event, the Model 424 used in this way can provide complete qualification and test for complex circuits and systems, both in QC and on the production floor.

Note

The Out Lo and Measure Lo terminals should always be connected together somewhere, even if Measure Hi is left floating. If the erroneous readings obtained in this 'floating' state are of concern, Measure Hi can be connected to Measure Lo as well. Under no circumstances should Measure Lo be returned or connected to a point in the circuit under test that is at a potential different from that to which Out Lo is connected. "Floating" measurements of this nature are not possible with the basic Model 424. Out Lo and Measure Lo can be connected at different points on the same line

(ground, low, etc.) to obtain Measure results at the device or element of interest ( a protector in a circuit or system, say), while applying Out Lo to the actual point-of-entry of the transient being simulated. In every case, however, the points to which Out Lo and Measure Lo are connected, must be conductively connected in the circuit under test.

### 2.9.5 Testing Active Circuits and Systems

One of the common methods of testing active circuits and systems with a surge generator is to apply the impulse or surge via a gas-tube breakdown device. This can be an excellent method. For gas-tubes with high enough voltage ratings, the impulse generator and the circuit under test will not be connected prior to the surge itself.

However, for the benefit of both the circuit and the surge generator, it is also necessary to make sure the gas tube "disconnects" after the surge. This will automatically take place if the voltage across the tube goes through zero. Unfortunately the tube may not stop conducting if the voltage on it never drops below 20 or 30 volts. If the circuit voltage is of this order or more, and is in the opposite polarity from the surge polarity, then continued conduction of the coupling gas-tube after the surge, or so-called "holdover", may occur. Thus, surging a -30 volt line using a gas-tube coupler with a positive surge (that is presumed never to undershoot below zero), will leave the gas-tube in the conducting state after the impulse. This may have a serious effect on the circuit, the surge generator or both.

For the above reasons, surging active circuits should only be undertaken after careful study of the conditions involved. One good way to start such tests is to use an auxiliary power resistor of fairly high value in series with the surge, to try out the selected technique. Consult factory for further details and assistance.

For surging power lines, the PN282 of course does a 'turn-key' job -- providing ac power-line input and surged ac line output to the device under test. Since the voltage and current monitoring for this unit are both floating, it can also be used to surge other active loads with suitable coupling and filtering. The PN261 also permits surging active loads conveniently, since it, too, has isolated monitoring. (See section 5 for greater details on these Programmers and their applications.)

## 2.10 Peak Power and Energy

### 2.10.1 Peak Impulse Power, Available and Delivered

In testing devices and circuits, it is often necessary to work at or within peak impulse power specifications for each surge. Available peak power output is readily calculated for each Programmer Network and for each Programmer Network current selection for exponential rise/exponential decay waves as:

$$\text{Available peak power} = (1/4)\left(\text{Rated open-circuit voltage}\right)\left(\text{Rated short-circuit current}\right)$$

This available peak power will be delivered to an essentially resistive load whose resistance matches the Programmer Network output resistance; and of greater interest, to protectors that clamp at half of the maximum open-circuit voltage. Table 2-2 lists the available peak power in kilowatts for some Programmer Networks. Figures range from about 1 to 125 kW.

To obtain lower available peak power than the values in the table, the open-circuit Set Voltage control can be positioned at less than rated full range open circuit voltage. Peak power is proportional to the square of the open-circuit voltage setting. Thus using 900V instead of 1000V for the PN 242 Programmer set to 500A, will yield 125 kW from Table 2-2, times $(900/1000)^2$, or about 100 kW. More generally, for an available peak power $P_A$ less than the maximum, $P_{Amax}$, open-circuit voltage $V_{OC}$ should be set to a fraction of maximum open-circuit voltage $V_{OCmax}$ given by:

$$V_{OC} = V_{OCmax}\sqrt{P_A/P_{Amax}}$$

For exponential rise/exponential decay waves (8x20, 10x1000, etc.) the Model 424 Programmer Networks exhibit relatively small differences between open-circuit voltage and short-circuit current waveshapes. For rate-of-rise waves, however, the load has a significant effect on decay time. The typical open-circuit voltage decay time for these waves is about 800 usec; typical short-circuit current decay time is about 300 usec.

Delivered peak power will always be less than or equal to available peak power, and will depend on the load. Delivered will be equal to available power for a resistive load equal to the Model 424 impulse generator internal resistance R given in Table 2-2 for various Programmer Networks. On the other hand, for protectors of either the breakdown or the limiting type, two possibilities exist:

1. The protector limits at or breaks down to a potential that is low compared with the Model 424 peak

TABLE 2-2

PROGRAMMER NETWORK CHARACTERISTICS

| Programmer Network | T (Decay to 1/2 Peak) usec | Open-Circuit Voltage (plateau) | Short-Circuit Current (amperes) | Output R (ohms) | Available Peak Power $P_{pk_{max}}$ (kilowatts) |
|---|---|---|---|---|---|
| PN 241 | 1000* | 1500 | 60 | 25 | 22.5 |
| | 1000 | 1500 | 15 | 100 | 5.6 |
| PN 242 | 20 | 1000 | 500 | 2 | 125 |
| | | | 200 | 5 | 50 |
| | | | 100 | 10 | 25 |
| | | | 50 | 20 | 12.5 |
| | | | 20 | 50 | 5 |
| PN 243 | 50 | 1500 | 500 | 3 | 187.5 |
| | | | 200 | 7.5 | 75 |
| | | | 100 | 15 | 37.5 |
| | | | 50 | 30 | 18.75 |
| | | | 20 | 75 | 7.5 |
| PN 244 | 50 | 1000 | 500 | 2 | 125 |
| | | | 200 | 5 | 50 |
| | | | 100 | 10 | 25 |
| | | | 50 | 20 | 13 |
| | | | 20 | 50 | 5 |
| PN 245 | + | 1500 (plateau) | 40 | 37.5 | 15 |
| PN 246 | + | 1500 (plateau) | 50 | 30 | 18.75 |
| PN 247 | 20(I),40(V) | 1500 | 2000 | 0.75 | 750 |
| PN 248 | >160 | 1500 | 200 | 7.5 | 75 |
| | >560 | 800 | 100 | 8 | 20 |
| PN 249 | 200 | 800 | 1500 | .53 | 302 |
| PN 250 | 1000** | 1500 | 250 | 6 | 93.8 |
| | 1000 | 1000 | 100 | 10 | 25 |

+ 300 usec for short-circuit current; about 900 usec for open-circuit voltage.

* 1000 usec for short-circuit current; about 7500 usec for open-circuit voltage.

** 1000 usec for short-circuit current; about 8000 usec for open-circuit voltage.

TABLE 2-2 (con't)

PROGRAMMER NETWORK CHARACTERISTICS

| Programmer Network | T (Decay to 1/2 Peak) usec | Open-Circuit Voltage (plateau) | Short-Circuit Current (amperes) | Output R (ohms) | Available Peak Power $P_{pk_{max}}$ (kilowatts) |
|---|---|---|---|---|---|
| PN 251 | 1000** | 1500 | 500 | 3 | 187.5 |
| PN 252 | | 1000 | 45 | 22 | 11.3 |
| PN 253 | V I<br>1000 320<br>500 240<br>100 60<br>50 40<br>20 20 | 1500 | 150 | 10 | 56. |
| PN 261 | 5** | 6000 | 200 | 50*** | 180 |
| PN 281 | 5** | 6000 | 200 | 50*** | 180 |
| PN 282 | >10 | 2500 | 1000 | 2.5 | 625 |
| PN 283 | ~25 | ~5000 | ~100 | ~50 | ~500 |
| PN 286 | 5 (10 kV/uS)<br>5 ( 5 kV/uS)<br>40 ( 1 kV/uS)<br>40 (.5 kV/uS)<br>65 (.1 kV/uS) | 3200<br>3200<br>3200<br>3200<br>3000 | 50 | 65<br>65<br>65<br>65<br>60 | 40<br>40<br>40<br>40<br>38 |
| PN 291 | 2800(V) 1000(I)1200****<br>1260 1000<br>1000 1000<br>1000 1000<br>1000 1000<br>1000 1000 | | 300<br>100<br>30<br>10<br>5<br>1 | 4<br>12<br>40<br>120<br>240<br>1200 | 90<br>30<br>9<br>3<br>1.5<br>.3 |

** 1000 usec for short-circuit current; about 8000 usec for open-circuit voltage.

++ Approximate -- oscillatory decay to second peak is 40%.

***In parallel with approx. 50 uH. Effective $Z_{out}$ ~30 ohms.

****Extended range operation to 1500V. (Currents x 1500/1200)

This page left blank intentionally.

open-circuit output voltage. This category includes low voltage surge-rated zeners, gas-tubes and carbon-block arresters, and low-voltage varistors.

Essentially full short-circuit current flows through the protector until exponential voltage decay drops the output voltage below the protector clamp potential $V_{clamp}$. Peak power is therefore essentially short-circuit-current $I_{sc}$ times protector clamp voltage, $V_{clamp}$:

$$P_{pk_{delivered}} \cong I_{sc} \times V_{clamp}$$

Thus a 6.8 volt surge-rated zener that clamps at 10V for a 500A peak current carries a (10V)x(500A), or 5 kW peak power. To get a 1.5 kW peak power on the same device for example, peak current should be about 150A. This can be achieved by setting the open-circuit voltage using the Set Voltage knob, to 150/500 times 1000V, or 300V, on the PN 242 in 500A position. An even better approach is to use the 200A position on the same Programmer, and to set open-circuit voltage to 150/200 times 1000V, or to 750V. It is always best to work as close as possible to maximum rated open-circuit voltage for the Programmer in use.

Note however that the clamp voltage at 150A is likely to be somewhat less than the 10V that results with 500A, so an additional small correction may be required if exactly 1500W is desired. Thus if 150A gives a 9V clamp potential, say, then peak power is only about 500 x 9 or 1350W. Raise the 150 to 165A (about 10%), by raising open-circuit voltage to about 825V. If the 9V remains essentially unchanged, resulting peak power will be 9 x 165 or about 1485W, close enough for most purposes and the accuracies involved.

2. The protector limits at voltages that are relatively large -- over 10 or 20%, say -- of the Model 424 peak open-circuit output voltage. This category includes the higher-voltage varistors and some of the higher-voltage surge-rated zeners. It does not include breakdown devices which fire at a high voltage but then conduct current at a far lower one.

   For this second case of rather large clamp voltage $V_{clamp}$, peak power is obtained by calculating peak current as the difference between open-circuit and clamp voltages, divided by R:

$$I_{pk_{delivered}} = (V_{oc} - V_{clamp})/R$$

Multiplying this peak delivered current by the clamp voltage yields the peak delivered power:

$$P_{pk_{delivered}} = V_{clamp} (V_{oc} - V_{clamp})/R$$

Thus since from Table 2-2, R for the PN 241 in 60A mode is 25 ohms, for example, a 500V clamping varistor driven by the PN 241 in this mode has a peak delivered power of:

$$P_{pk\ delivered} = 500V\ (1500-500)V/25\ ohms$$
$$= 20\ kW.$$

The same varistor with the PN 242 in 500A mode, for which the Table indicates R is 2 ohms, yields:

$$P_{pk_{delivered}} = 500V\ (1000-500)V/2\ ohms$$
$$= 125\ kW,$$

which is the maximum available peak power from that Programmer Network, since $V_{clamp}$ in the example happens to equal (1/2) $V_{oc}$ for the 500V protector.

Tables 2-3(a),(b) and (c)give delivered peak power in kilowatts for protectors with clamp voltages ranging from 10 to 1400V, for each of the Programmers and Programmer short-circuit selections. All values are given for rated, i.e. full, open-circuit voltage settings. Clamping voltages are shown from 10 to 100V in 10V steps in Table 2-3(a), and from 100 to 1400V in 100V steps in Table 2-3(b), and finally from 1000V up in Table 2-3(c). Peak power values for clamp voltages different from thos in the table may be obtained by interpolation.

2.10.2 Impulse Energies

Many protectors and circuits are rated in terms of pulse energy -- joules -- rather than in peak pulse power. Energy is the integral of power with respect to time: one watt for a second is one joule, a watt for 10 seconds is 10 joules, as is ten watts for one second, etc.

The Model 424 stores 80 joules on its internal 70 ufd capacitor at 1500V (actually 78.75 joules to be exact). The PN 241 and some other Programmer Networks make use of this full 70 ufd capacitance. When the 25 ufd internal capacitor is used, stored energy is 28 joules (28.125) at 1500V, 12.5 joules at 1000V. The PN 242 through 246 all use the 25 ufd capacitor: the 242 and 244 at 1000V, the 243, 245 and 246 at 1500V.

TABLE 2-3(a)

PEAK POWER DELIVERED TO PROTECTORS WITH CLAMPING VOLTAGES FROM 10 TO 100V (kilowatts)

| $V_{clamp}$ (volts): | 10 | 20 | 30 | 40 | 50 | 60 | 70 | 80 | 90 | 100 |
|---|---|---|---|---|---|---|---|---|---|---|
| PN 241 set to 1500V | | | | | | | | | | |
| 60A | .6 | 1.2 | 1.8 | 2.3 | 2.9 | 3.5 | 4.0 | 4.6 | 5.1 | 5.6 |
| 15A | .2 | .3 | .5 | .6 | .7 | .9 | 1.0 | 1.2 | 1.3 | 1.4 |
| PN 242 set to 1000V | | | | | | | | | | |
| 500A | 5.0 | 10. | 15. | 19. | 24. | 28. | 33. | 37. | 41. | 45. |
| 200A | 1.2 | 3.9 | 5.8 | 7.7 | 9.5 | 11. | 13. | 15. | 16. | 18. |
| 100A | 1.0 | 2.0 | 2.9 | 3.8 | 4.8 | 5.6 | 6.5 | 7.4 | 8.2 | 9.0 |
| 50A | .5 | 1.0 | 1.5 | 1.9 | 2.4 | 2.8 | 3.2 | 3.7 | 4.1 | 4.5 |
| 20A | .2 | .4 | .6 | .8 | 1.0 | 1.1 | 1.3 | 1.5 | 1.6 | 1.8 |
| PN 243 set to 1500V | | | | | | | | | | |
| 500A | 5.0 | 10. | 14. | 19. | 24. | 28. | 33. | 38. | 42. | 47. |
| 200A | 2.0 | 3.9 | 5.9 | 7.8 | 9.7 | 12. | 13. | 15. | 17. | 19. |
| 100A | 1.0 | 2.0 | 2.9 | 3.9 | 4.8 | 5.8 | 6.7 | 7.6 | 8.5 | 9.3 |
| 50A | .5 | 1.0 | 1.5 | 1.9 | 2.4 | 2.9 | 3.3 | 3.8 | 4.2 | 4.7 |
| 20A | .2 | .4 | .6 | .8 | 1.0 | 1.2 | 1.3 | 1.5 | 1.7 | 1.9 |
| PN 244 set to 1000V | | | | | | | | | | |
| 500A | 5.0 | 10. | 15. | 19. | 24. | 28. | 33. | 37. | 41. | 45. |
| 200A | 1.2 | 3.9 | 5.8 | 7.7 | 9.5 | 11. | 13. | 15. | 16. | 18. |
| 100A | 1.0 | 2.0 | 2.9 | 3.8 | 4.8 | 5.6 | 6.5 | 7.4 | 8.2 | 9.0 |
| 50A | .5 | 1.0 | 1.5 | 1.9 | 2.4 | 2.8 | 3.2 | 3.7 | 4.1 | 4.5 |
| 20A | .2 | .4 | .6 | .8 | 1.0 | 1.1 | 1.3 | 1.5 | 1.6 | 1.8 |

NOTE: To get peak power levels different from those given in the table, use open-circuit voltages less than full range for the Programmer in use. Peak power is essentially proportionately lower, as the square of the ratio of open-circuit voltage setting to the rated open-circuit voltage for the Programmer in use; so long as open-circuit voltage remains at least 5 x the clamping voltage. If the ratio is not this high, consult text, Section 2.10.1 item 2, for appropriate formulas.

TABLE 2-3(b)

PEAK POWER DELIVERED TO PROTECTORS WITH CLAMPING VOLTAGES FROM 100 TO 1000V (kilowatts)

| $V_{clamp}$ (volts): | 100 | 200 | 300 | 400 | 500 | 600 | 700 | 800 | 900 | 1000 |
|---|---|---|---|---|---|---|---|---|---|---|
| PN 241 set to 1500V | | | | | | | | | | |
| 60A | 5.6 | 10. | 14. | 18. | 20. | 22. | 22. | 22. | 22. | 20. |
| 15A | 1.4 | 2.6 | 3.6 | 4.4 | 5.0 | 5.4 | 5.6 | 5.6 | 5.4 | 5.0 |
| PN 242 set to 1000V | | | | | | | | | | |
| 500A | 45. | 80. | 105. | 120. | 125. | 120. | 105. | 80. | 45. | |
| 200A | 18. | 32. | 42. | 48. | 50. | 48. | 42. | 32. | 18. | |
| 100A | 9.0 | 16. | 21. | 24. | 25. | 24. | 21. | 16. | 9.0 | |
| 50A | 4.5 | 8.0 | 11. | 12. | 13. | 12. | 11. | 8.0 | 4.5 | |
| 20A | 1.8 | 3.2 | 4.2 | 4.8 | 5.0 | 4.8 | 4.2 | 3.2 | 1.8 | |
| PN 243 set to 1500V | | | | | | | | | | |
| 500A | 47. | 87. | 120. | 147. | 167. | 180. | 187. | 187. | 180. | 167. |
| 200A | 19. | 35. | 48. | 59. | 67. | 72. | 75. | 75. | 72. | 67. |
| 100A | 9.0 | 17. | 24. | 29. | 33. | 36. | 37. | 37. | 36. | 33. |
| 50A | 4.7 | 8.7 | 12. | 15. | 17. | 18. | 19. | 19. | 18. | 17. |
| 20A | 1.9 | 3.5 | 4.8 | 5.9 | 6.7 | 7.2 | 7.5 | 7.5 | 7.2 | 6.7 |
| PN 244 set to 1000V | | | | | | | | | | |
| 500A | 45. | 80. | 105. | 120. | 125. | 120. | 105. | 80. | 45. | |
| 200A | 18. | 32. | 42. | 48. | 50. | 48. | 42. | 32. | 18. | |
| 100A | 9.0 | 16. | 21. | 24. | 25. | 24. | 21. | 16. | 9.0 | |
| 50A | 4.5 | 8.0 | 11. | 12. | 13. | 12. | 11. | 8.0 | 4.5 | |
| 20A | 1.8 | 3.2 | 4.2 | 4.8 | 5.0 | 4.8 | 4.2 | 3.2 | 1.8 | |

See note, page 2-55.

TABLE 2-3(c)

PEAK POWER DELIVERED TO PROTECTORS WITH CLAMPING VOLTAGES FROM 1000V UP (kilowatts)

| $V_{clamp}$ (volts): | 1000 | 1100 | 1200 | 1300 | 1400 | 1600 | 1800 | 2000 | 2500 | 3000 |
|---|---|---|---|---|---|---|---|---|---|---|
| PN 241 set to 1500V | | | | | | | | | | |
| 60A | 20. | 18. | 14. | 10. | 5.6 | | | | | |
| 15A | 5.0 | 4.4 | 3.6 | 2.6 | 1.4 | | | | | |
| PN 242 set to 1000V | | | | | | | | | | |
| 500A | | | | | | | | | | |
| 200A | | | | | | | | | | |
| 100A | | | | | | | | | | |
| 50A | | | | | | | | | | |
| 20A | | | | | | | | | | |
| PN 243 set to 1500V | | | | | | | | | | |
| 500A | 167. | 147. | 120. | 87. | 47. | | | | | |
| 200A | 67. | 59. | 48. | 35. | 19. | | | | | |
| 100A | 33. | 29. | 24. | 17. | 9. | | | | | |
| 50A | 17. | 15. | 12. | 8.7 | 4.7 | | | | | |
| 20A | 6.7 | 5.9 | 4.8 | 3.5 | 1.9 | | | | | |
| PN 244 set to 1000V | | | | | | | | | | |
| 500A | | | | | | | | | | |
| 200A | | | | | | | | | | |
| 100A | | | | | | | | | | |
| 50A | | | | | | | | | | |
| 20A | | | | | | | | | | |

See note, page 2-55.

TABLE 2-3(a) (con't)

PEAK POWER DELIVERED TO PROTECTORS WITH CLAMPING VOLTAGES FROM 10 TO 100V (kilowatts)

| $V_{clamp}$ (volts): | 10 | 20 | 30 | 40 | 50 | 60 | 70 | 80 | 90 | 100 |
|---|---|---|---|---|---|---|---|---|---|---|
| PN 245 set to 1500V (plateau) | .4 | .8 | 1.2 | 1.6 | 1.9 | 2.3 | 2.7 | 3.0 | 3.4 | 3.7 |
| PN 246 set to 1500V (plateau) | .5 | 1.0 | 1.5 | 1.9 | 2.4 | 2.9 | 3.3 | 3.8 | 4.2 | 4.7 |
| PN 247 set to 1500V 2000A | 20. | 40. | 59. | 78. | 97. | 115. | 133. | 151. | 169. | 187. |
| PN 248 set to | | | | | | | | | | |
| 1500V: 10x160, 200A | 2.0 | 4.0 | 5.9 | 7.8 | 9.7 | 12. | 13. | 15. | 17. | 19. |
| 800V: 10x560, 100A | 1.0 | 2.0 | 2.9 | 3.8 | 4.7 | 5.6 | 6.4 | 7.2 | 8.0 | 8.8 |
| PN 249 set to 800V | | | | | | | | | | |
| 1500A | 15. | 29. | 44. | 57. | 71. | 84. | 96. | 109. | 121. | 132. |
| 500A | 4.9 | 9.8 | 14. | 19. | 23. | 28. | 32. | 36. | 40. | 44. |
| PN 250 set to | | | | | | | | | | |
| 1500V: 250A | 2.5 | 4.9 | 7.4 | 9.7 | 12. | 14. | 17. | 19. | 21. | 23. |
| 1000V: 100A | 1.0 | 2.0 | 2.9 | 3.8 | 4.8 | 5.6 | 6.5 | 7.4 | 8.2 | 9.0 |
| PN 251 set to 1500V 500A | 5.0 | 9.9 | 15. | 19. | 24. | 29. | 33. | 38. | 42. | 47. |

See note, page 2-55.

TABLE 2-3(b) (con't)

PEAK POWER DELIVERED TO PROTECTORS WITH CLAMPING VOLTAGES FROM 100 TO 1000V (kilowatts)

| $V_{clamp}$ (volts): | 100 | 200 | 300 | 400 | 500 | 600 | 700 | 800 | 900 | 1000 |
|---|---|---|---|---|---|---|---|---|---|---|
| PN 245 set to 1500V (plateau) | 3.7 | 6.9 | 9.6 | 12. | 13. | 14. | 15. | 15. | 14. | 13. |
| PN 246 set to 1500V (plateau) | 4.7 | 8.7 | 12. | 15. | 17. | 18. | 19. | 19. | 18. | 17. |
| PN 247 set to 1500V 2000A | 187. | 347. | 480. | 587. | 667. | 720. | 747. | 747. | 720. | 667. |
| PN 248 set to | | | | | | | | | | |
| 1500V: 10x160, 200A | 19. | 35. | 48. | 59. | 67. | 72. | 75. | 75. | 72. | 67. |
| 800V: 10x560, 100A | 8.8 | 15. | 19. | 20. | 19. | 15. | 8.8 | | | |
| PN 249 set to 800V | | | | | | | | | | |
| 1500A | 132. | 226. | 283. | 302. | 283. | 226. | 132. | | | |
| 500A | 44. | 75. | 94. | 100. | 94. | 75. | 44. | | | |
| PN 250 set to | | | | | | | | | | |
| 1500V: 250A | 23. | 43. | 60. | 73. | 83. | 90. | 93. | 93. | 90. | 83. |
| 1000V: 100A | 9.0 | 16. | 21. | 24. | 25. | 24. | 21. | 16. | 9. | |
| PN 251 set to 1500V 500A | 47. | 87. | 120. | 147. | 167. | 180. | 187. | 187. | 180. | 167. |

See note, page 2-55.

TABLE 2-3(c) (con't)

PEAK POWER DELIVERED TO PROTECTORS WITH CLAMPING VOLTAGES FROM 1000V UP (kilowatts)

| $V_{clamp}$ (volts): | 1000 | 1100 | 1200 | 1300 | 1400 | 1600 | 1800 | 2000 | 2500 | 3000 |
|---|---|---|---|---|---|---|---|---|---|---|
| PN 245 set to 1500V (plateau) | 13. | 12. | 9.6 | 6.9 | 3.7 | | | | | |
| PN 246 set to 1500V (plateau) | 17. | 15. | 12. | 8.7 | 4.7 | | | | | |
| PN 247 set to 1500V 2000A | 667. | 587. | 480. | 347. | 187. | | | | | |
| PN 248 set to 1500V: 10x160, 200A 800V: 10x560, 100A | 67. | 59. | 48. | 35. | 19. | | | | | |
| PN 249 set to 800V 1500A 500A | | | | | | | | | | |
| PN 250 set to 1500V: 250A 1000V: 100A | 83. | 73. | 60. | 43. | 23. | | | | | |
| PN 251 set to 1500V 500A | 167. | 147. | 120. | 87. | 47. | | | | | |

See note, page 2-55.

TABLE 2-3(a) (con't)

PEAK POWER DELIVERED TO PROTECTORS WITH CLAMPING VOLTAGES FROM 10 TO 100V (kilowatts)

| $V_{clamp}$ (volts): | 10 | 20 | 30 | 40 | 50 | 60 | 70 | 80 | 90 | 100 |
|---|---|---|---|---|---|---|---|---|---|---|
| PN 261 set to 6kV 120A (50 ohms output impedance) | 1.2 | 2.4 | 3.6 | 4.8 | 6.0 | 7.1 | 8.3 | 9.5 | 11. | 12. |
| PN 282 set to 2.5kV 1000A | 10. | 20. | 30. | 39. | 49. | 59. | 68. | 77. | 87. | 96. |



See note, page 2-55.

TABLE 2-3(b) (con't)

PEAK POWER DELIVERED TO PROTECTORS WITH CLAMPING VOLTAGES FROM 100 TO 1000V (kilowatts)

| $V_{clamp}$ (volts): | 100 | 200 | 300 | 400 | 500 | 600 | 700 | 800 | 900 | 1000 |
|---|---|---|---|---|---|---|---|---|---|---|
| PN 261 set to 6kV 120A (50 ohms output impedance) | 12. | 23. | 34. | 45. | 55. | 65. | 74. | 83. | 92. | 100. |
| PN 282 set to 2.5kV 1000A | 96. | 184. | 264. | 336. | 400. | 456. | 504. | 544. | 576. | 600. |



See note, page 2-55.

TABLE 2-3(c) (con't)

PEAK POWER DELIVERED TO PROTECTORS WITH CLAMPING VOLTAGES FROM 1000V UP (kilowatts)

| $V_{clamp}$ (volts): | 1000 | 1100 | 1200 | 1300 | 1400 | 1600 | 1800 | 2000 | 2500 | 3000 |
|---|---|---|---|---|---|---|---|---|---|---|
| PN 261 set to 6kV 120A (50 ohms output impedance) | 100. | 108. | 115. | 122. | 129. | 141. | 151. | 160. | 175. | 180. |
| PN 282 set to 2.5kV 1000A | 600. | 616. | 624. | 624. | 616. | 576. | 504. | 400. | | |



See note, page 2-55.

This page left blank intentionally.

Up to one-half of the stored energy can be delivered to a matched external resistive or protector load -- or essentially 40 joules for the 70 ufd case.

1. Resistive Loads

A. For a rectangular pulse of voltage E and duration T applied to a load resistor $R_L$, total pulse energy, the symbol for which is W, is $(E2/R_L)T$ joules.

B. For non-rectangular pulses energy is calcaulted similarly, using integration. For a voltage pulse of the exponential type -- fast rise, exponential decay to half of peak in time T, the energy dissipated by a resistor $R_L$ to which the pulse is applied is:

$$W = 0.72\ E^2\ T/R_L$$

where E is the peak voltage of the pulse.

C. Thus for a 10 x 1000 (microsecond) pulse with 1500V peak, energy delivered to a load resistor $R_L$ is $1620/R_L$ joules.

D. The output peak voltage from the Model 424 is affected when the loading resistor, $R_L$, begins to be comparable with the output resistance, R. Energy applied to the load $R_L$ on a 10 x 1000 wave (PN 241 Programmer Network) with 1500V peak, becomes:

$$W = (1620/R_L) \times (R_L/R+R_L)^2 \text{ joules.}$$

E. Waves like the 8 x 20 can deliver energies that are as much as 2:1 higher at lower protector levels, and up to 5 or 6:1 higher at high protector levels (compared to peak open-circuit pulse voltage), than what would be obtained if they had much steeper fronts. (The 8 x 20 has a $te^{-at}$, rather than a simple $e^{-at}$, waveshape.)

F. Table 2-4 shows energies delivered by the various Programmers to a hypothetical load resistor $R_L$. When $R_L$ is much greater than R, or the load is much greater than the internal Programmer resistance, the pulse energy relationships simplify as shown in the table.

All values are for full rated open-circuit voltages. For lower open-circuit voltage settings, energy decreases by the square of the ratio of the setting

TABLE 2-4

ENERGY DELIVERED TO LOAD RESISTORS

| Programmer Network | Open-Circuit Voltage (volts) | Short-Circuit Current (amperes) | Output R (ohms) | Energy Delivered To Load $R_L$ (joules) Any $R_L$* | $R_L >> R$ | $R_L = R$ |
|---|---|---|---|---|---|---|
| PN 241 | 1500 | 60 | 25 | $1620\ R_L/(25+R_L)^{2+}$ | $12{,}150/R_L$ | 32.4 |
| | | 15 | 100 | $1620\ R_L/(100+R_L)^{2}$ | $1{,}620/R_L$ | 4.1 |
| PN 242 | 1000 | 500 | 2 | $14.4\ R_L/(2+R_L)^{2}$ | $14.4/R_L$ | 1.8 |
| | | 200 | 5 | $14.4\ R_L/(5+R_L)^{2}$ | " | 0.7 |
| | | 100 | 10 | $14.4\ R_L/(10+R_L)^{2}$ | " | 0.4 |
| | | 50 | 20 | $14.4\ R_L/(20+R_L)^{2}$ | " | 0.2 |
| | | 20 | 50 | $14.4\ R_L/(50+R_L)^{2}$ | " | 0.1 |
| PN 243 | 1500 | 500 | 3 | $81\ R_L/(3+R_L)^{2}$ | $81/R_L$ | 6.8 |
| | | 200 | 7.5 | $81\ R_L/(7.5+R_L)^{2}$ | " | 2.7 |
| | | 100 | 15 | $81\ R_L/(15+R_L)^{2}$ | " | 1.4 |
| | | 50 | 30 | $81\ R_L/(30+R_L)^{2}$ | " | 0.7 |
| | | 20 | 75 | $81\ R_L/(75+R_L)^{2}$ | " | 0.3 |
| PN 244 | 1000 | 500 | 2 | $36\ R_L/(2+R_L)^{2}$ | $36/R_L$ | 4.5 |
| | | 200 | 5 | $36\ R_L/(5+R_L)^{2}$ | " | 1.8 |
| | | 100 | 10 | $36\ R_L/(10+R_L)^{2}$ | " | 0.9 |
| | | 50 | 20 | $36\ R_L/(20+R_L)^{2}$ | " | 0.5 |
| | | 20 | 50 | $36\ R_L/(50+R_L)^{2}$ | " | 0.2 |
| PN 245 | 1500 (plateau) | 40 | 37.5 | $\sim 486\ R_L/(37.5+R_L)^{2+}$ | $1458/R_L$ | 8.1 |
| PN 246 | 1500 (plateau) | 50 | 30 | $\sim 486\ R_L/(30+R_L)^{2+}$ | $1458/R_L$ | 8.1 |
| PN 247 | 1500 | 2000 | .75 | $32\ R_L/(75+R_L)^{2+}$ | $65/R_L$ | 16. |
| PN 248 | 1500 | 200 | 7.5 | $259\ R_L/(7.5+R_L)^{2+}$ | $518/R_L$ | 13. |
| | 800 | 100 | 8 | $259\ R_L/(8+R_L)^{2+}$ | $516/R_L$ | 12. |
| PN 249 | 800 | 1500 | .53 | $92\ R_L/(.53+R_L)^{2}$ | $92/R_L$ | 43. |
| | | 500 | 1.6 | $92\ R_L/(1.6+R_L)^{2}$ | $92/R_L$ | 14. |

* Except for those indicated with a (+) since for them T varies with $R_L$ -- in <u>these</u> cases, expressions only apply for $R_L << R$. See figures for $R_L >> R$ and $R_L = R$.

+ See (*) note above.

TABLE 2-4 (con't)

ENERGY DELIVERED TO LOAD RESISTORS

| Programmer Network | Open-Circuit Voltage (volts) | Short-Circuit Current (amperes) | Output R (ohms) | Energy Delivered To Load $R_L$ (joules) | | | |
|---|---|---|---|---|---|---|---|
| | | | | | Any $R_L$* | $R_L >> R$ | $R_L = R$ |
| PN 250 | 1500 | 250 | 6 | 1620 | $R_L/(6+R_L)^{2+}$ | | |
| | 1000 | 100 | 10 | 720 | $R_L/(10+R_L)^2$ | $720/R_L$ | 18. |
| PN 251 | 1500 | 500 | 3 | 1620 | $R_L/(3+R_L)^{2+}$ | | |
| PN 261 | 6000 | 120 | 50 | | <.3 | <.3 | <.3 |
| PN 282 (at 15 usec) | 2500 | 1000 | 2.5 | 68 | $R_L/(2.5+R_L)^2$ | $68/R_L$ | 6.8 |

* Except for those indicated with a (+) since for them T varies with $R_L$ -- in these cases, expressions only apply for $R_L << R$. See figures for $R_L >> R$ and $R_L = R$.

\+ See (*) note above.

This page left blank intentionally.

to the full rated open-circuit voltage setting for that Programmer Network.

2. Energy Delivered to Protectors

Usually of much greater importance is the energy delivered by a pulse to a protector or to a circuit containing one. For a protector with clamp voltage $V_{clamp}$, conduction occurs until the voltage wave decays to the $V_{clamp}$ level. The energy W delivered to the protector is a complicated function of the capacitor-stored voltage $V_c$, protector voltage $V_{clamp}$, the ratio of Programmer internal shunt-to-ground resistor r to the Programmer internal series output resistor R, as well as the value of the energy storage capacitor C. Equation (1) below covers one important case, for pure exponential waves of the form $e^{-at}$. Networks are of the form of Fig. 3-8(b) with $\rho$=o and R equal to any of $R_1$ through $R_5$; and Fig. 3-8(c), with $\rho$=o and $R_1+R_2=R$.

$$W = V_{clamp}\,(V_c-V_{clamp})C\left(\frac{r}{r+R} - \frac{rR}{(r+R)^2\left(\frac{V_c}{V_{clamp}}-1\right)}\ln\left(1+\left(\frac{V_c}{V_{clamp}}-1\right)\left(\frac{r+R}{R}\right)\right)\right) \qquad (1$$

The 8 x 20 wave, with risetime relatively long in comparison with decay, is of the form $te^{-at}$. Equation (2) below applies ($V_c$ is not the open-circuit peak; but the stored capacitor voltage -- about 1.36 times peak open-circuit, since the wave-shaping network is so "lossy".)

$$W = \frac{2EV_cr}{R(r+R)} \int_{t_1}^{t_2} (te^{-at} - V_{clamp})dt \qquad (2$$

$$\text{where } V_{clamp} = 2V_cat_1e^{-at_1} \qquad (2a$$

$$\text{and } V_{clamp} = 2V_cat_2e^{-at_2} \qquad (2b$$

When $\rho$ is not zero, or there is a resistor directly in series with the energy storage capacitor as in Figs. 3-8 (b) and (c), equation must be expanded. Equation (3) is the result. Again, $V_c$ is capacitor-stored voltage. (Peak open-circuit voltage is determined by the ratio of r to $\rho$, given by $r/(r+\rho)$.)

$$W = V_{clamp}\,(V_c - V_{clamp} - \frac{\rho}{r} V_{clamp})C$$

$$x\left(\frac{r}{r+R} - \frac{rR + \frac{p(r+R)}{V_{clamp}}}{(r+R)^2\left(\frac{V_c}{V_{clamp}} - 1 - \frac{\rho}{r}\right)}\right) \ln\left(1 + \frac{\frac{V_c}{V_{clamp}} - 1 - \frac{\rho}{r}}{\frac{R}{r+R} + \frac{\rho}{r}}\right))$$

A computer solution set for the three equations is given in Tables 2-5(a), 2-5(b) and 2-5(c), showing energies delivered to protectors by wave-shaping Programmer Networks over a range of clamping voltage $V_{clamp}$. $V_{clamp}$ is shown from 10 to 100V in 10V steps Table 2-5(a), from 100 to 1000V in 100V steps in Table 2-5(b), and for 1000V and up in Table 2-5(c). Note that the "clamping" voltage of a gas protector or carbon block arrestor, for purposes of this energy determination, is not the breakdown potential which is registered by the Model 424 digital voltage read-out. It is the voltage in the arc mode that follows -- typically a few tens of volts.

Energy levels for clamp voltages different from those in the tables may be obtained by interpolation.

Different energy levels can be obtained by using lower open-circuit voltages. Either use equations (1), (2) and (3), or consult factory.

TABLE 2-5(a)

ENERGY DELIVERED TO PROTECTORS WITH CLAMPING OR SUSTAINING VOLTAGES FROM 10 TO 100V (joules)

| $V_{clamp}$ (volts): | 10 | 20 | 30 | 40 | 50 | 60 | 70 | 80 | 90 | 100 |
|---|---|---|---|---|---|---|---|---|---|---|
| (1) PN 241 set to 1500V | | | | | | | | | | |
| 60A | .9 | 1.7 | 2.6 | 3.4 | 4.2 | 4.9 | 5.7 | 6.4 | 7.2 | 7.9 |
| 15A | .2 | .4 | .6 | .7 | .9 | 1.0 | 1.2 | 1.3 | 1.5 | 1.6 |
| (2) PN 242 set to 1000V | | | | | | | | | | |
| 500A | .08 | .2 | .2 | .3 | .4 | .4 | .5 | .6 | .6 | .7 |
| 200A | .03 | .06 | .09 | .1 | .2 | .2 | .2 | .2 | .2 | .3 |
| 100A | .02 | .03 | .05 | .06 | .07 | .09 | .1 | .1 | .1 | .1 |
| 50A | .01 | .02 | .02 | .03 | .04 | .04 | .05 | .06 | .06 | .07 |
| 20A | .003 | .006 | .009 | .01 | .01 | .02 | .02 | .02 | .02 | .03 |
| (1) PN 243 set to 1500V | | | | | | | | | | |
| 500A | .3 | .5 | .7 | .9 | 1.1 | 1.3 | 1.5 | 1.7 | 1.9 | 2.1 |
| 200A | .1 | .2 | .3 | .4 | .5 | .6 | .7 | .8 | .9 | .9 |
| 100A | .06 | .1 | .2 | .2 | .3 | .3 | .4 | .4 | .5 | .5 |
| 50A | .03 | .06 | .09 | .1 | .1 | .2 | .2 | .2 | .2 | .3 |
| 20A | .01 | .03 | .04 | .05 | .06 | .07 | .08 | .09 | .1 | .1 |
| (1) PN 244 set to 1000V | | | | | | | | | | |
| 500A | .2 | .3 | .4 | .6 | .7 | .8 | .9 | 1.0 | 1.1 | 1.1 |
| 200A | .06 | .1 | .2 | .2 | .3 | .3 | .3 | .4 | .4 | .4 |
| 100A | .03 | .06 | .09 | .1 | .1 | .2 | .2 | .2 | .2 | .2 |
| 50A | .01 | .02 | .04 | .05 | .06 | .06 | .07 | .08 | .09 | .09 |
| 20A | .007 | .01 | .02 | .02 | .03 | .03 | .04 | .04 | .04 | .05 |

NOTE: To get energy levels different from those given in the table, use open-circuit voltages less than full range for the Programmer in use. Energy levels are essentially proportionately lower, up to about 100V for $V_{clamp}$.

(1), (2) and (3) designate the applicable equation in section 2.10.2, item 2.

TABLE 2-5(b)

ENERGY DELIVERED TO PROTECTORS WITH CLAMPING OR SUSTAINING VOLTAGES FROM 100 TO 1000V (joules)

| | $V_{clamp}$ (volts): | 100 | 200 | 300 | 400 | 500 | 600 | 700 | 800 | 900 | 1000 |
|---|---|---|---|---|---|---|---|---|---|---|---|
| (1) | PN 241 set to 1500V | | | | | | | | | | |
| | 60A | 7.9 | 14. | 19. | 22. | 24. | 24. | 24. | 22. | 20. | 16. |
| | 15A | 1.6 | 2.6 | 3.2 | 3.4 | 3.4 | 3.2 | 2.9 | 2.5 | 2.0 | 1.5 |
| (2) | PN 242 set to 1000V | | | | | | | | | | |
| | 500A | .7 | 1.0 | 1.2 | 1.3 | 1.2 | 1.0 | .7 | .5 | .2 | |
| | 200A | .3 | .4 | .5 | .5 | .5 | .4 | .3 | .2 | .07 | |
| | 100A | .1 | .2 | .3 | .3 | .2 | .2 | .2 | .1 | .03 | |
| | 50A | .07 | .1 | .1 | .1 | .1 | .1 | .07 | .05 | .02 | |
| | 20A | .03 | .04 | .05 | .05 | .05 | .04 | .03 | .02 | .01 | |
| (1) | PN 243 set to 1500V | | | | | | | | | | |
| | 500A | 2.1 | 3.4 | 4.1 | 4.5 | 4.5 | 4.3 | 3.8 | 3.3 | 2.7 | 2.0 |
| | 200A | .9 | 1.5 | 1.8 | 2.0 | 2.0 | 1.8 | 1.7 | 1.4 | 1.1 | .9 |
| | 100A | .5 | .8 | 1.0 | 1.0 | 1.0 | 1.0 | .8 | .7 | .6 | .4 |
| | 50A | .3 | .4 | .5 | .5 | .5 | .5 | .4 | .4 | .3 | .2 |
| | 20A | .1 | .2 | .2 | .2 | .2 | .2 | .2 | .1 | .1 | .09 |
| (1) | PN 244 set to 1000V | | | | | | | | | | |
| | 500A | 1.1 | 1.7 | 1.8 | 1.7 | 1.5 | 1.1 | .7 | .3 | .1 | |
| | 200A | .4 | .6 | .7 | .6 | .5 | .4 | .2 | .1 | .03 | |
| | 100A | .2 | .3 | .3 | .3 | .3 | .2 | .1 | .06 | .02 | |
| | 50A | .09 | .1 | .1 | .1 | .1 | .08 | .05 | .02 | .007 | |
| | 20A | .05 | .07 | .07 | .07 | .05 | .04 | .02 | .01 | .003 | |

NOTE: To get energy levels different from those given in the table, use open-circuit voltages less than full range for the Programmer in use. Consult factory for specific numeric information.

(1), (2) and (3) designate the applicable equation in section 2.10.2, item 2.

TABLE 2-5(c)

ENERGY DELIVERED TO PROTECTORS WITH CLAMPING OR SUSTAINING VOLTAGES EQUAL TO OR GREATER THAN 1000V (joules)

| $V_{clamp}$ (volts): | 1000 | 1100 | 1200 | 1300 | 1400 |
|---|---|---|---|---|---|
| (1) PN 241 set to 1500V | | | | | |
| 60A | 16. | 13. | 8.6 | 4.7 | 1.5 |
| 15A | 1.5 | 1.1 | .6 | .3 | .08 |
| (2) PN 242 set to 1000V | | | | | |
| 500A | | | | | |
| 200A | | | | | |
| 100A | | | | | |
| 50A | | | | | |
| 20A | | | | | |
| (1) PN 243 set to 1500V | | | | | |
| 500A | 2.0 | 1.4 | .9 | .4 | .1 |
| 200A | .9 | .6 | .4 | .2 | .04 |
| 100A | .4 | .3 | .2 | .08 | .02 |
| 50A | .2 | .2 | .09 | .04 | .01 |
| 20A | .09 | .06 | .04 | .02 | .004 |
| (1) PN 244 set to 1000V | | | | | |
| 500A | | | | | |
| 200A | | | | | |
| 100A | | | | | |
| 50A | | | | | |
| 20A | | | | | |

See notes, page 2-72.

TABLE 2-5(a) (con't)
ENERGY (joules), FOR PROTECTORS FROM 10 TO 100V

| $V_{clamp}$ (volts): | 10 | 20 | 30 | 40 | 50 | 60 | 70 | 80 | 90 | 100 |
|---|---|---|---|---|---|---|---|---|---|---|
| (1) PN 245 set to 1500V 40A | .2 | .4 | .6 | .8 | 1.0 | 1.2 | 1.4 | 1.5 | 1.7 | 1.9 |
| (1) PN 246 set to 1500V 50A | .2 | .5 | .7 | .9 | 1.1 | 1.3 | 1.5 | 1.7 | 1.9 | 2.1 |
| (2) PN 247 set to 1500V 2000A | .5 | 1.0 | 1.4 | 1.9 | 2.3 | 2.7 | 3.1 | 3.5 | 3.9 | 4.3 |
| PN 248 set to* | | | | | | | | | | |
| (1) 1500V: 10x160, 200A | .5 | 1.0 | 1.5 | 1.9 | 2.4 | 2.8 | 3.2 | 3.6 | 3.9 | 4.3 |
| (3) 800V: 10x560, 100A | .8 | 1.5 | 2.2 | 2.9 | 3.6 | 4.2 | 4.8 | 5.4 | 6.0 | 6.5 |
| (3) PN 249 set to 800V | | | | | | | | | | |
| 1500A | 2.6 | 5.0 | 7.3 | 9.6 | 12. | 14. | 16. | 18. | 20. | 21. |
| 500A | 1.1 | 2.1 | 3.1 | 4.0 | 4.8 | 5.7 | 6.5 | 7.2 | 7.9 | 8.6 |
| PN 250 set to | | | | | | | | | | |
| (1) 1500V: 250A | 3.7 | 7.3 | 11. | 14. | 18. | 21. | 24. | 28. | 31. | 34. |
| (3) 1000V: 100A | 1.3 | 2.5 | 3.7 | 4.8 | 5.8 | 6.8 | 7.8 | 8.7 | 9.6 | 10. |
| (1) PN 251 set to 1500V 500A | 7.1 | 14. | 21. | 27. | 34. | 40. | 46. | 52. | 58. | 64. |

*Figures shown are minimums, and may be as much as 2 x higher.

See notes, page 2-71.

TABLE 2-5(b) (con't)
ENERGY (joules), FOR PROTECTORS FROM 100 TO 1000V

| $V_{clamp}$ (volts): | 100 | 200 | 300 | 400 | 500 | 600 | 700 | 800 | 900 | 1000 |
|---|---|---|---|---|---|---|---|---|---|---|
| (1) PN 245 set to 1500V 40A | 1.9 | 3.2 | 4.1 | 4.6 | 4.8 | 4.7 | 4.4 | 3.9 | 3.3 | 2.6 |
| (1) PN 246 set to 1500V 50A | 2.1 | 3.5 | 4.5 | 5.1 | 5.4 | 5.3 | 5.0 | 4.5 | 3.8 | 3.0 |
| (2) PN 247 set to 1500V 2000A | 4.3 | 8.3 | 9.4 | 11. | 11. | 11. | 11. | 10. | 8.8 | 7.3 |
| PN 248 set to* | | | | | | | | | | |
| (1) 1500V: 10x160, 200A | 4.3 | 7.3 | 9.1 | 10. | 11. | 10. | 9.4 | 8.3 | 6.9 | 5.4 |
| (3) 800V: 10x560, 100A | 6.5 | 11. | 13. | 14. | 13. | 9.7 | 5.5 | | | |
| (3) PN 249 set to 800V 1500A | 21. | 35. | 42. | 43. | 39. | 30. | 17. | | | |
| 500A | 8.6 | 14. | 16. | 16. | 14. | 10. | 5.7 | | | |
| PN 250 set to | | | | | | | | | | |
| (1) 1500V: 250A | 34. | 61. | 81. | 96. | 105. | 109. | 108. | 102. | 92. | 79. |
| (3) 1000V: 100A | 10. | 17. | 20. | 22. | 21. | 19. | 15. | 11. | 5.5 | |
| (1) PN 251 set to 1500V 500A | 64. | 114. | 152. | 178. | 194. | 200. | 195. | 183. | 163. | 137. |

*Figures shown are minimums, and may be as much as 2 x higher.

See notes, page 2-72.

TABLE 2-5(c) (con't)
ENERGY (joules), FOR PROTECTORS ABOVE 1000V

| $V_{clamp}$ (volts): | 1000 | 1100 | 1200 | 1300 | 1400 |
|---|---|---|---|---|---|
| (1) PN 245 set to 1500V 40A | 2.6 | 1.9 | 1.2 | .6 | .2 |
| (1) PN 246 set to 1500V 50A | 3.0 | 2.2 | 1.4 | .7 | .2 |
| (2) PN 247 set to 1500V 2000A | 7.3 | 5.6 | 3.9 | 2.3 | .9 |
| PN 248 set to* (1) 1500V: 10x160, 200A (3) 800V: 10x560, 100A | 5.4 | 3.8 | 2.4 | 1.2 | .3 |
| (3) PN 249 set to 800V 1500A 500A | | | | | |
| PN 250 set to (1) 1500V: 250A (3) 1000V: 100A | 79. | 62. | 44. | 25. | 8.2 |
| (1) PN 251 set to 1500V 500A | 137. | 106. | 73. | 40. | 13. |

*Figures shown are minimums, and may be as much as 2 x higher.

See notes, page 2-72.

This page, and pages 2-78 and 2-79 following,
left blank and omitted intentionally.

TABLE 2-5(a) (con't)
ENERGY (joules), FOR PROTECTORS FROM 10 TO 100V

| $V_{clamp}$ (volts): | 10 | 20 | 30 | 40 | 50 | 60 | 70 | 80 | 90 | 100 |
|---|---|---|---|---|---|---|---|---|---|---|
| (1) PN 282 set to 2500V* (1250V on analog meter) 1000A | .1 | .2 | .3 | .5 | .6 | .7 | .9 | .9 | 1.0 | 1.1 |



*Figures shown are minimums, and may be as much as 2 x higher.

See notes, page 2-71.

TABLE 2-5(b) (con't)
ENERGY (joules), FOR PROTECTORS FROM 100 TO 1000V

| $V_{clamp}$ (volts): | 100 | 200 | 300 | 400 | 500 | 600 | 700 | 800 | 900 | 1000 |
|---|---|---|---|---|---|---|---|---|---|---|
| (1) PN 282 set to 2500V* (1250V on analog meter) 1000A | 1.1 | 2.1 | 2.9 | 3.6 | 4.2 | 4.8 | 5.2 | 5.5 | 5.8 | 5.9 |



*Figures shown are minimums, and may be as much as 2 x higher.

See notes, page 2-72.

TABLE 2-5(c) (con't)
ENERGY (joules), FOR PROTECTORS ABOVE 1000V

| Vclamp (volts): | 1000 | 1100 | 1200 | 1300 | 1400 | 1600 | 1800 | 2000 | 2200 | 2400 |
|---|---|---|---|---|---|---|---|---|---|---|
| (1) PN 282 set to 2500V* (1250V on analog meter) 1000A | 5.9 | 6.0 | 6.0 | 5.9 | 5.8 | 5.3 | 4.4 | 3.5 | 2.2 | .8 |

*Figures shown are minimums, and may be as much as 2 x higher.

See notes, page 2-72.

SECTION 3

# 3. Theory of Operation

## 3.1 Introduction: System Block Diagram

The Model 424 is a multi-waveform surge generator, providing short-duration, single-shot pulses at delivered peak power levels to over 750 kV. It is designed to drive a variety of linear and non-linear loads, including protectors, suppressors, and the circuits in which they are used.

The system block diagram is shown in Fig. 3-1. The left side of the Figure is the Surge Generator, the right portion the Monitor for both voltage and current peaks, as indicated.

Timing and Control Circuits, operated by manual, momentary (+) and (-) Charge switches as shown, establish a charge on energy-storage capacitors. The standard Model 424 comes equipped with a 25 and a 45 ufd capacitor, which may be used singly or in parallel, depending on selection by the front-panel plug-in Programmer Network. (Auxiliary units can supply up to a total of 560 ufd.)

A pulse relay controlled by a manual momentary Pulse switch mounted on the Programmer Network as shown, connects the energy storage capacitor to the output terminals via the pulse-forming network (PFN) contained in the Programmer. (A simplified L-R network is shown as an example of such a PFN.) Connection between the Programmer and the front-panel Out Hi/Out Lo terminal pair is interrupted, in the return or low line, by a current sampler -- actually a current pulse transformer through whose core the Out Lo lead is threaded.

The front-panel Measure Hi/Measure Lo terminal pair in the Monitor portion of the Model 424 picks up the signal at the Device or System Under Test, which is driven from the Out Hi/Out Lo terminals as shown. From there the signal is applied, along with the output from the Current Sampler, to a pair of Peak Detectors -- one for voltage and one for current. Peak Detector outputs supply a pair of A/D converters, and finally digital displays plug go/no go comparators and displays for voltage and current. Manual settings for maximum allowable peak voltage and minimum allowable peak current set comparison levels for the comparators.

The Model 424 is comprised of the following functional circuits:

1. High voltage generation, storage and switching
2. Charge and Pulse control, including circuit interlocks
3. Wave-shaping, located in the interchangeable, plug-in Programmer Networks

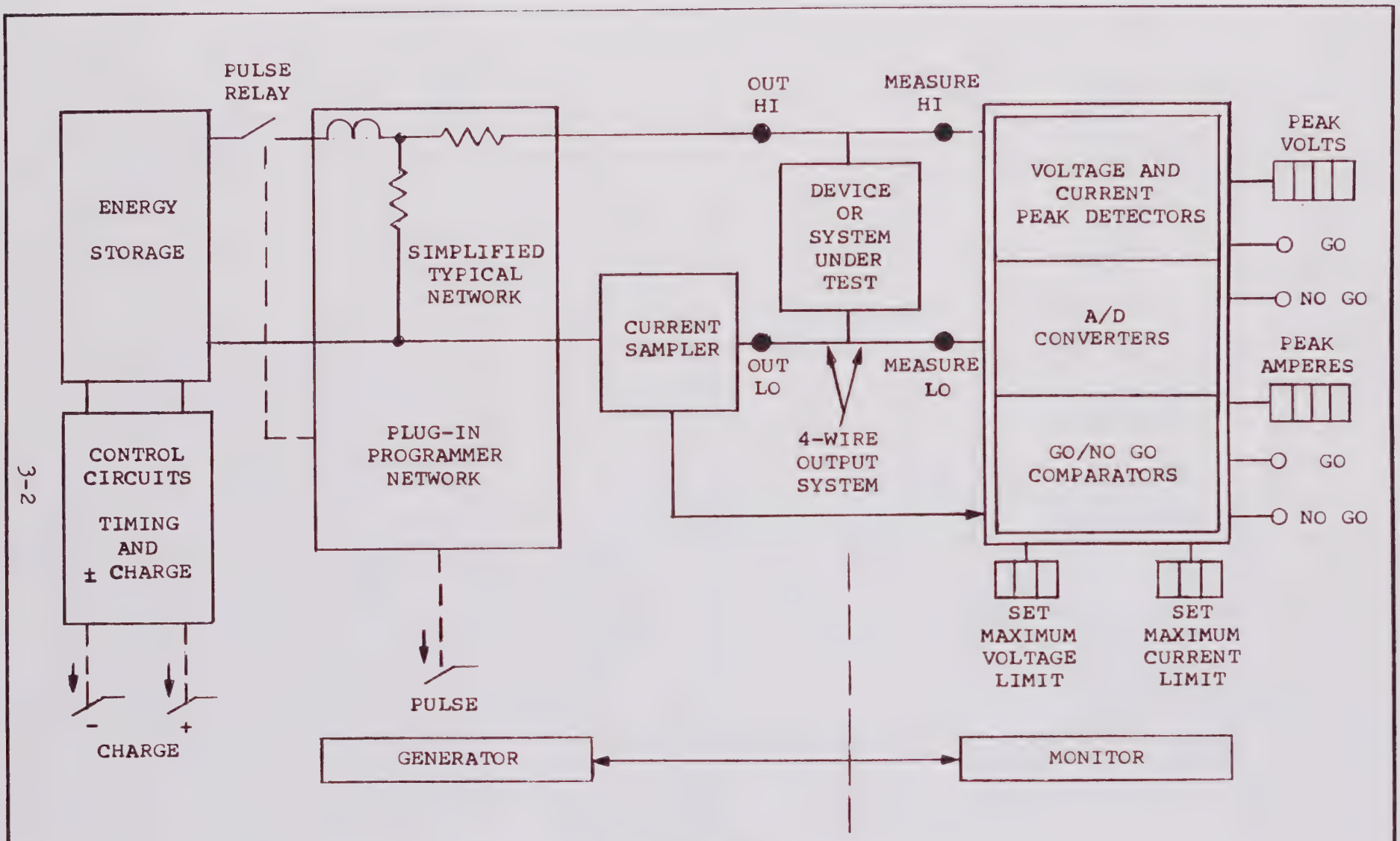


FIG. 3-1
BLOCK DIAGRAM
MODEL 424 SURGE GENERATOR/MONITOR

4. Voltage peak measurement and display

5. Current peak measurement and display

6. Power supplies, including power interlocks

Each of the above is discussed in detail in the sections that follow.

## 3.2 High Voltage Generation, Storage and Switching

Fig. 3-2 shows a simplified diagram of the high-voltage, energy storage and switching circuitry of the Model 424. The high voltage originates with the ac line, supplied to the front-panel mounted variable transformer V. The control for the variable transformer is termed "Set Voltage" on the Model 424 front panel.

The variable transformer output is supplied, via heavy-current switching relay K7, to high voltage transformer THV; which steps it up to the 1500 volts required for full range output. The THV transformer output is rectified by the diode bridge D46-D48. Output from the bridge is switched by relays K1 and K2 for positive pulse output, and K3 and K4 for negative pulse output, to energy storage capacitor C1. This capacitor may be 25 or 70 mfd depending on selection by the plug-in Programmer Network (not shown in this figure). K1-K4 are high voltage relays, capable of withstanding over 5kV, but not capable of interrupting high currents. For this reason they are operated 'dry' or while no current is flowing. Relay control circuits covered in the next section describe how this is done.

Voltage on capacitor C1 is metered by front panel analog meter M, located within a diode bridge driven from a dropping resistor across C1. The bridge assures that the meter will read upscale, independent of capacitor voltage polarity.

Two normally-closed high-power relays, K8A and K8B, are in series with a 200 ohm bleeder resistor R9, across the storage capacitor C1. This circuit insures rapid C1 discharge when the power is turned off. It also discharges C1 rapidly when charge is being changed from one polarity to another.

The main pulse discharge to the Model 424 output is initiated by power relay K5, a bounce-free mercury plunger type. It connects the capacitor C1 (already disconnected from its charging source by K1-K4), to the pulse-forming network located in one of the front-panel plug-in Programmer Networks. The Programmer Network output is supplied to the instrument's output terminals, as shown.

Relay coils are indicated below the simplified diagram: K7 is driven alone, as is K5; while K1 and K2, K3 and K4 and K8A and K8B are driven in parallel pairs. All of the relay coils are driven by the Charge and Pulse relay control circuitry covered in section 3.3.

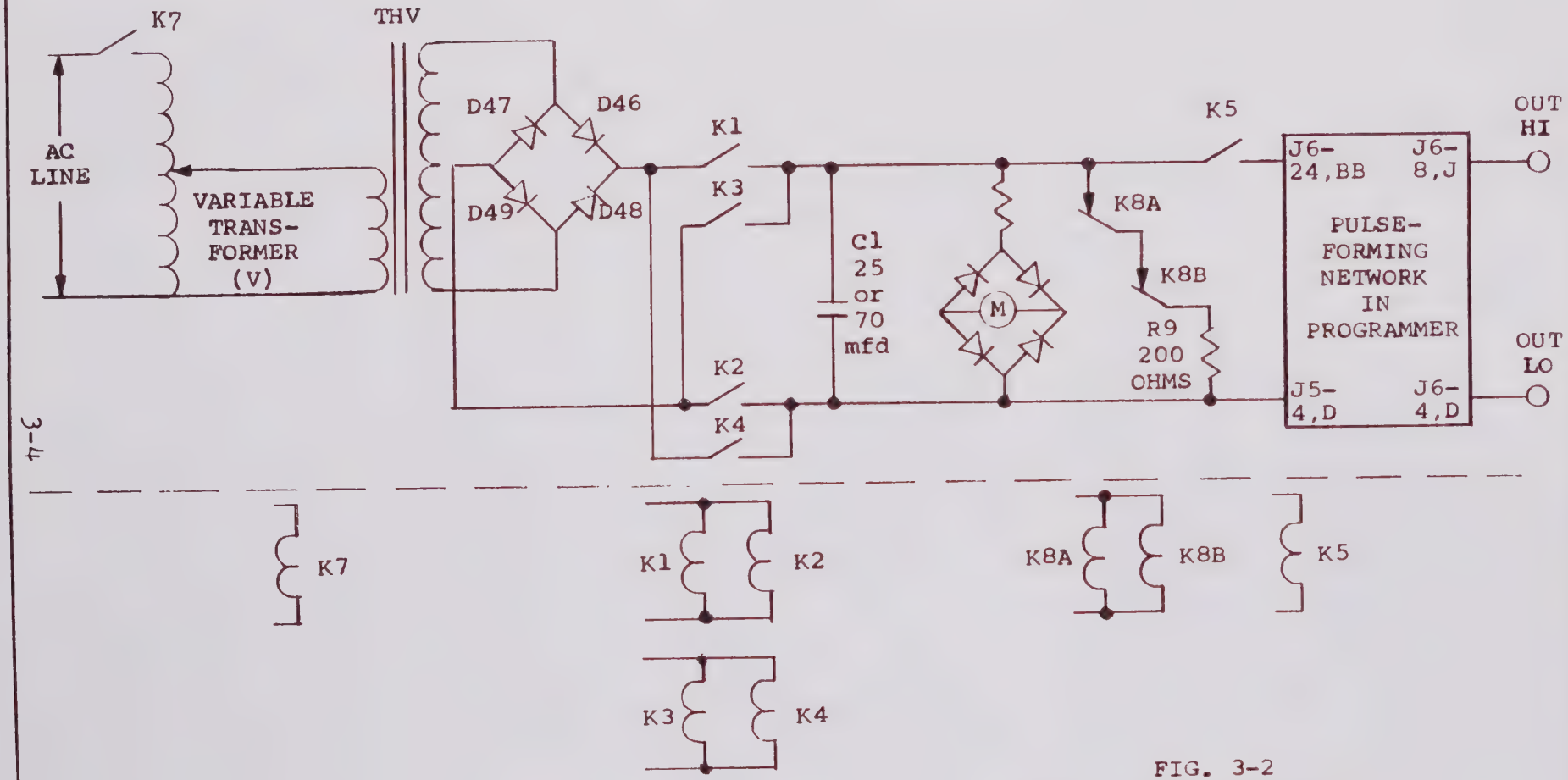


FIG. 3-2
HIGH-VOLTAGE GENERATION, STORAGE AND SWITCHING

## 3.3 Charge and Pulse Control

The Charge and Pulse control circuits, shown in block form in Fig. 3-3, have the following functions; where Block numbers refer to the figure, and Q numbers to the specific transistors used to implement each function.

Block 1: Turn on the (+) Charge relays (designated K1 and K2) when the (+) Charge front panel switch is depressed. (C+ Control Circuits: Q1,2,3)

Block 2: Turn on the (-) Charge relays (designated K3 and K4) when the (-) Charge switch is depressed. (C- Control circuits; Q4,5,6)

Blocks 1,2: Cause the (+) or (-) Charge relay to drop out when the associated switch is released, faster than the time required for either to be turned on; to insure against both relays being on at the same time, regardless of the sequence of operation (or even multiple operation) of the (+) and (-) Charge switches.

Block 3: Activate the normally closed energy-storage-shorting safety relays (K8A and K8B), so that the capacitors may accept a charge for operation (1) or (2) above. These relays must be opened before either K1-K2 or K3-K4 are activated, so that the high-voltage supply (and relays K1-K4) are not shorted. Similarly, the control circuits must insure that K8A and K8B remain activated (contacts open) until after K1-K4 have opened, or else K1-K4 may, in some conditions of operation have to break up to 1500V, a task for which they are not designed. (Capacitor-Shorting Relay Control; Q9,10,11,12)

Block 4: Turn on the relay, K7, that applies ac to the primary of the high-voltage transformer; only after K8A and K8B are open, and K1-K2 (for (+)) or K3-K4 (for (-)) are turned on. Open K7 before the output Pulse is generated, so that K1-K2 (or K3-K4) may then be disconnected, thus providing for a disconnect between the high-voltage charging supply and the output pulse network (and output), just prior to generation of the pulse; for clean wave generation. (High Voltage Primary On Circuits; Q14,15,16,17)

Blocks 5,6: Generate a pre-pulse signal available for operating auxiliary internal circuitry (K6 output). (Block 5, Pulse Control Circuits; Q7,8,13,37, and Block 6, Pre-Pulse Signal Generator; Q21,22)

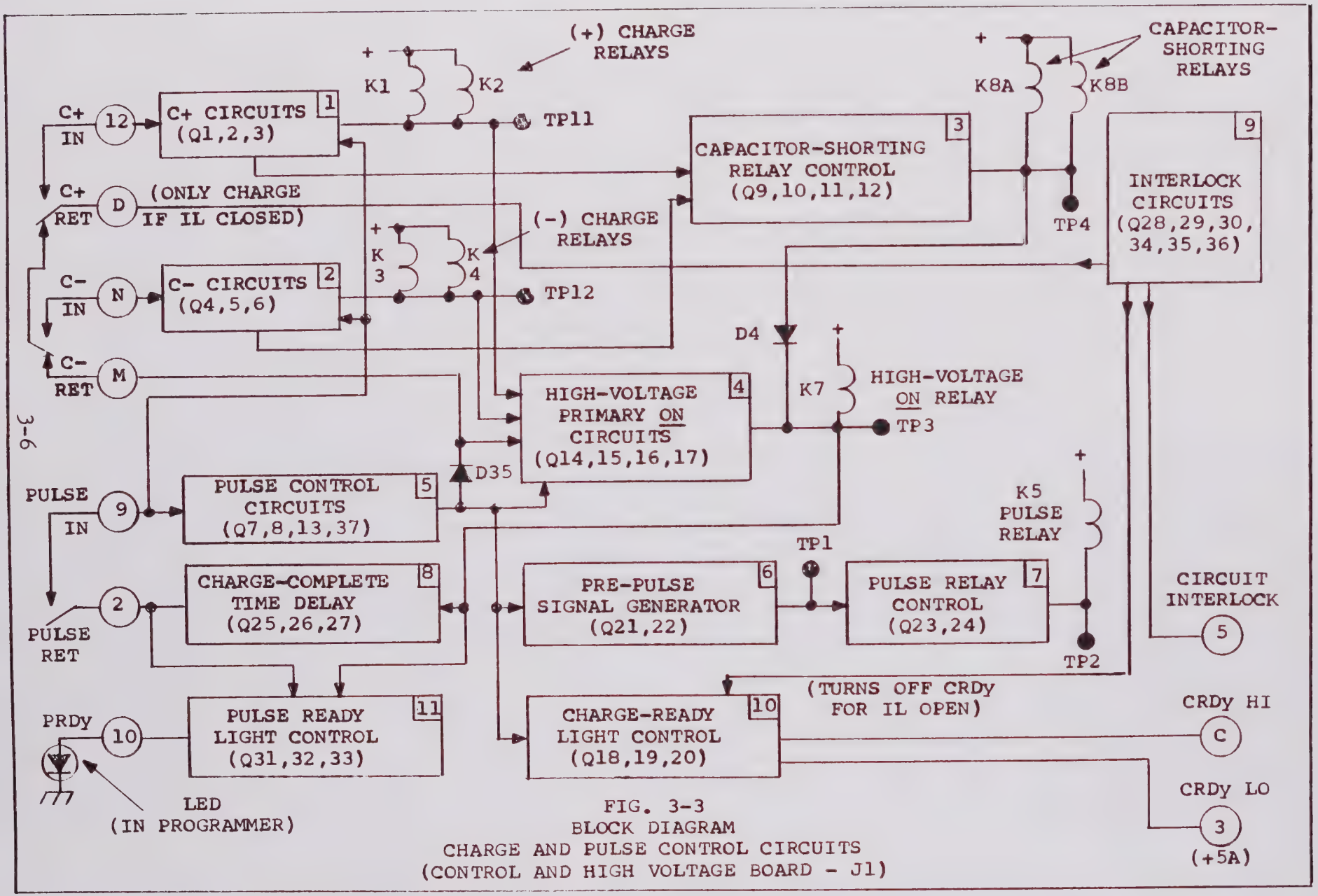


FIG. 3-3
BLOCK DIAGRAM
CHARGE AND PULSE CONTROL CIRCUITS
(CONTROL AND HIGH VOLTAGE BOARD - J1)

Block 7: Generate a Pulse relay signal (activating relay K5), to transfer the stored charge via the energy shaping network in the plug-in Programmer, to the load. (Pulse Relay Control; Q23,24)

Block 8: Provide an approximately two second time delay following initiation of Charge, to prevent pulsing operation via Block 7, unless full charge has been achieved. (Charge-Complete Time Delay; Q25,26,27)

Blocks 1,2: Hold the Charge and Pulse circuitry in a lockout condition until both switches have been released for about a second, insuring safe operation.

Block 9: Provide a circuit interlock function that requires a Programmer to be in place, an Out Lo-Measure Lo jumper, and an external interlock closure (when the External Front Panel Jack is in use); before any Charge or Pulse functions can take place. (Interlock Circuits; Q28,29,30,34,35,36)

Blocks 10,11: Furnish synchronizing and reset signals at appropriate times to the Model 424's internal peak measuring circuitry: furnish Charge Ready and Pulse Ready indications. (Block 10, Charge Ready Light Control; Q18,19,20, and Block 11, Pulse Ready Light Control; Q31,32,33)

Implementation of the above functions could be carried out by an array of digital logic, employing flip-flops for 'memories' of the various states, and one-shot multivibrators to effect the various time delays involved. However, since the logic circuitry is located within and indeed, controls high-voltage circuitry generating fast, high-energy pulses, it was considered safer to avoid regenerative circuits with their inherent noise sensitivity. Instead, memories and delays are implemented via large capacitors and transistor, diode or zener diode biases that must be exceeded before transistors switch on to complete an operation. This minimization of use of regenerative circuits from the timing and control functions results in extraordinary noise immunity in the Charge and Pulse control circuitry, so all-important to both personnel and equipment safety.

Thus, there is extensive use made of discrete components -- transistors and their associated resistors and capacitors. Familarization with circuit operation therefore requires study of the discrete circuitry that is used.

Fig. 3-4 gives an expanded view of the Block Diagram of Fig. 3-3, still omitting specific transistor circuitry and associated components, which are available on the detailed schematics.

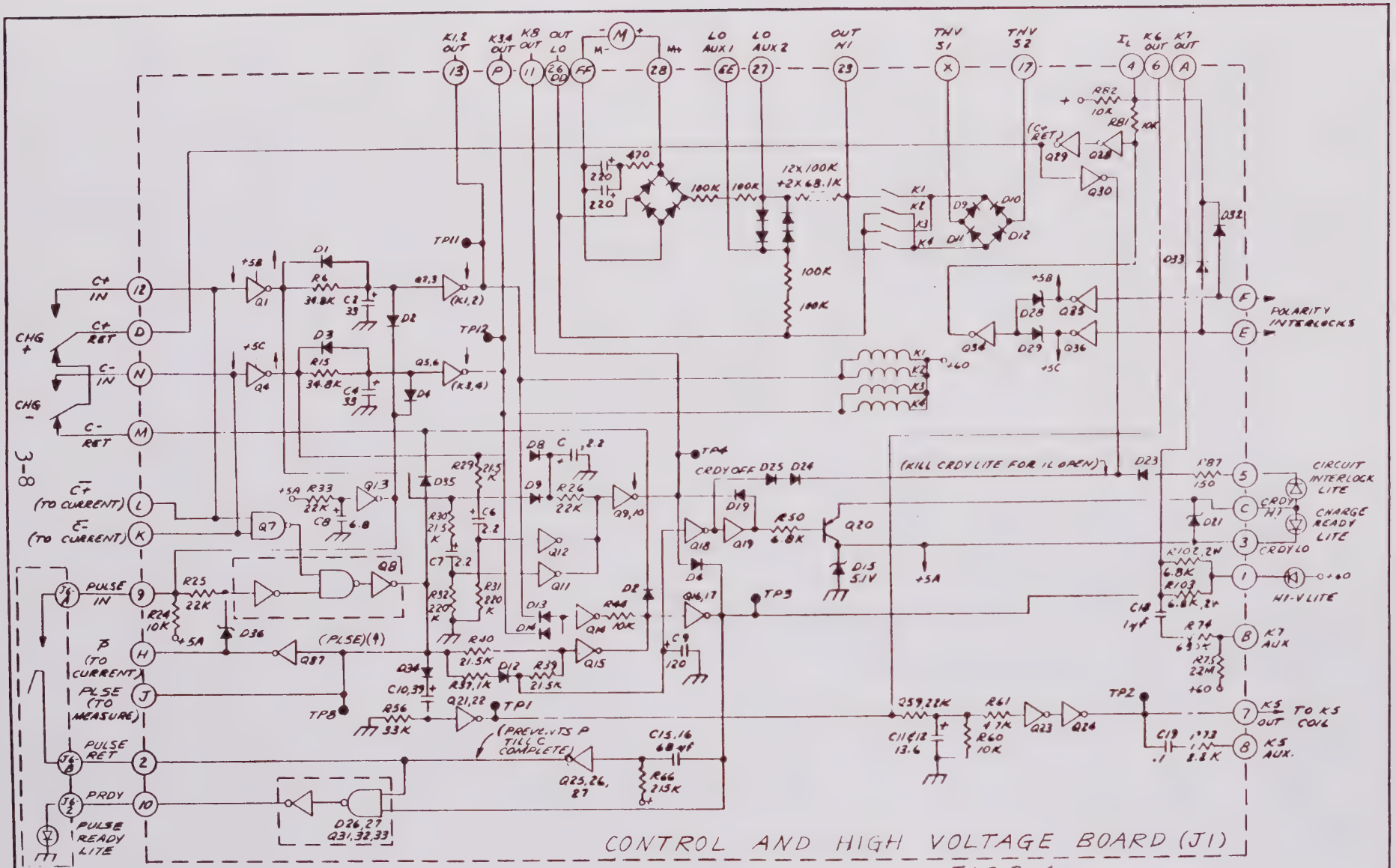


FIG 3-4
SIMPLIFIED SCHEMATIC
CHARGE & PULSE CONTROL CIRCUITS

In Fig. 3-4, transistors are represented singly or in groups by the functions they perform; inverters, gates and so forth. When comprehension requires discrete circuitry it is included; but it has been kept to a minimum in order to highlight functional performance. In what follows, block references refer to blocks in Fig. 3-3, for cross-reference purposes. Transistor or Q numbers are consistent in Figs. 3-3 and 3-4, and in the complete schematic of the Control and High Voltage PC board as well.

Time delays are set up to be consistent with the 50 to 100 msec operate and release times of the high-power, high-voltage mercury plunger-type relays that do most of the heavy switching. A cascade of such delays with their uncertainties, coupled with those of the delay circuits as well, requires circuit delays of 500 to 700 msec for safe high-voltage switching.

Another source of specific required delay figures is the charging time of the energy-storage capacitors. When the full 70-mfd combination of 25 and 45 mfd is used, the approximately 1500 ohm charging resistance gives about a 100 msec time constant; thus, requiring 500 to 700 msec to insure virtually complete charge. With relay delays and circuit/relay delay tolerances taken into account, plus the fact that all relays must operate in the correct sequence or else some excess component stress may result, the Charge-Complete Time Delay (Block 8 in Fig. 3-3) is set to approximately 1.5 seconds.

Still a third source of required delay is the 14 msec time constant of the 200 ohm bleeder discharging the maximum of 70 mfd when K8A/B return to their normally-closed condition. Reasonably complete discharge requires several of these 14 msec time constants.

Detailed circuit analysis of the Charge and Pulse control circuits follows. Charge performance and timing are described first, then Discharge, Simultaneous Charge (+)/Charge (-), and finally, Pulse modes of operation.

### 3.3.1 Charge

1. Block 1, K1,2 -- C+ Circuit, Q1,2,3: The Charge (+) switch, when C+ Return on pin D is at ground which occurs after the post-Pulse delay, when actuated furnishes ground to the C+ In, terminal 12. This C+ In signal is shown at point (1) in the first wave form in Fig. 3-5, Charge/Discharge Timing. The ground is inverted by Q1 to become +5. This high signal charges capacitor C2 via resistor R6, generating a time delay of approximately 0.7 second to actuation of the Charge (+) relays, K1 and K2, as shown at point (2) in the K1-K2 wave of Fig. 3-5. The delay is a function of the RC time constant and the threshold of the succeeding inverter composed of Q2 and Q3.

Output from the Q2,3 inverter drives the parallel coils of the two high-voltage relays, K1 and K2, mounted on the same Control and High Voltage board.

The diode D1 across timing resistor R6 causes K1 and K2 to drop out much faster than they pulled in since it effectively shorts R6 for drop-out operation. As a result, the drop-out time constant is merely the driving impedance of Q1 operating in conjunction with capacitor C2. This time constant is set (via a resistor not shown) to be on the order of 10x faster than the pull-in time constant.

2. Block 2, K3,4 -- C- Circuit, Q4,5,6: almost completely analogous to the C+ circuit, except that the Charge (+) switch must be in the 'off' condition for the ground assumed at C+ Return on pin D to be available to the arm of the Charge (-) switch. Thus, if both switches are simultaneously depressed, the Charge (+) switch will control, since the Charge (-) switch has no ground.

3. Block 3, K8A,8B -- Capacitor-Shorting Relay Control, Q9,10,11,12: The normally-closed, high power contacts of relays K8A and K8B are wired in series with each other and with a 200 ohm bleeder resistor across the programmer-selected energy storage capacitor. This circuit provides rapid discharge if a Charge switch is released before the output is pulsed, and when instrument line power is removed. These relays must be operated -- and their contacts opened -- during all phases of Charge and Pulse operation:

    1) to prevent the 200 ohm bleeder they otherwise apply across the capacitor from over-dissipating, and,

    2) to protect the (+) and (-) charging relays K1 through K4 from breaking high-voltage.

(They are designed to <u>withstand</u>, but not to break up to 5kV.)

As shown in Fig. 3-4, the K8A/B relay drivers, Q9 and 10, receive signals via two basic paths:

A. When either C+ or C- is activated, the positive-going signal that appears at the output of either Q1 (for (+)) or Q4 (for (-)) is applied via diode D9 or D8 respectively, to isolating resistor R26 at the input of the Q9 and Q10 driver.

B. However, when C+ or C- is first applied, the edge from the output of Q1 or Q4 is differentiated via

capacitor C6 or C7, driving Q12 or Q11, depending on polarity. By this means, for a time determined by the RC product of C6-R29 or C7-R30 (and the threshold of Q12 or Q11), a ground or low signal is applied directly to the input of the Q9 and Q10 drivers, temporarily inhibiting the positive-going actuating signal supplied as per (A) above, as a result of the isolating resistor R26.

The net result of the two signal paths is to apply a delayed actuation signal to K8A/B whenever C+ or C- is actuated; the delay of about 300 msec being generated by the RC combinations at the input to Q12 (for (+)) and Q11 (for(-)), in conjunction with Q12/Q11 thresholds. Point (3) in the K8A/B wave of Fig. 3-5 shows actuation of these relays, delayed by the 300 msec from C+ actuation.

4. Block 4, K7 -- High Voltage Primary ON Circuits, Q14, 15,16,17: Relay K7 connects the primary of the high-voltage transformer THV to the ac line via the front panel variable transformer V, furnishing voltage control. K7 is activated by Q16 and Q17. These transistors are actuated by either C+ or C-, using outputs from Block 1 or Block 2 via diode D13 or D14, for (+) or (-) polarity respectively. Outputs from Block 1 and 2 are available only after the 700 msec delay shown in the K1-2 wave in Fig. 3-5. K7 is actuated essentially at this time, as shown by point (4) on the K7 wave. Since K7 is a heavy-duty relay with about 50 msec delay, while K1-4 are 'signal' relays with a maximum of 10 msec delay, K7 contact closure -- point (5) on the K7 wave -- lags K1-K4 contact closure by about 40 msec. This interval is long enough to guarantee that K1-K4 do not have to switch high- voltage while current is flowing. The energy storage capacitor starts to take a charge when K7 actually closes, as indicated at point (6) at the Capacitor Voltage wave in Fig. 3-5.

### 3.3.2 Discharge

Under certain circumstances, a Charge switch may be released without generation of an output pulse. Relay control timing for this relatively infrequent operation must still guard high-voltage components from over-stress.

1. Block 1, K1,2 -- C+ Circuit: The C+ input is opened at point (7) in the Charge/Discharge Timing diagram of Fig. 3-5. K1 and K2 are de-energized about 100 msec later -- point (8) on the same diagram -- by virtue of a drop-out delay time constant made up of a resistor within the Q1 amplifier block in Fig. 3-4, and capacitor C2.

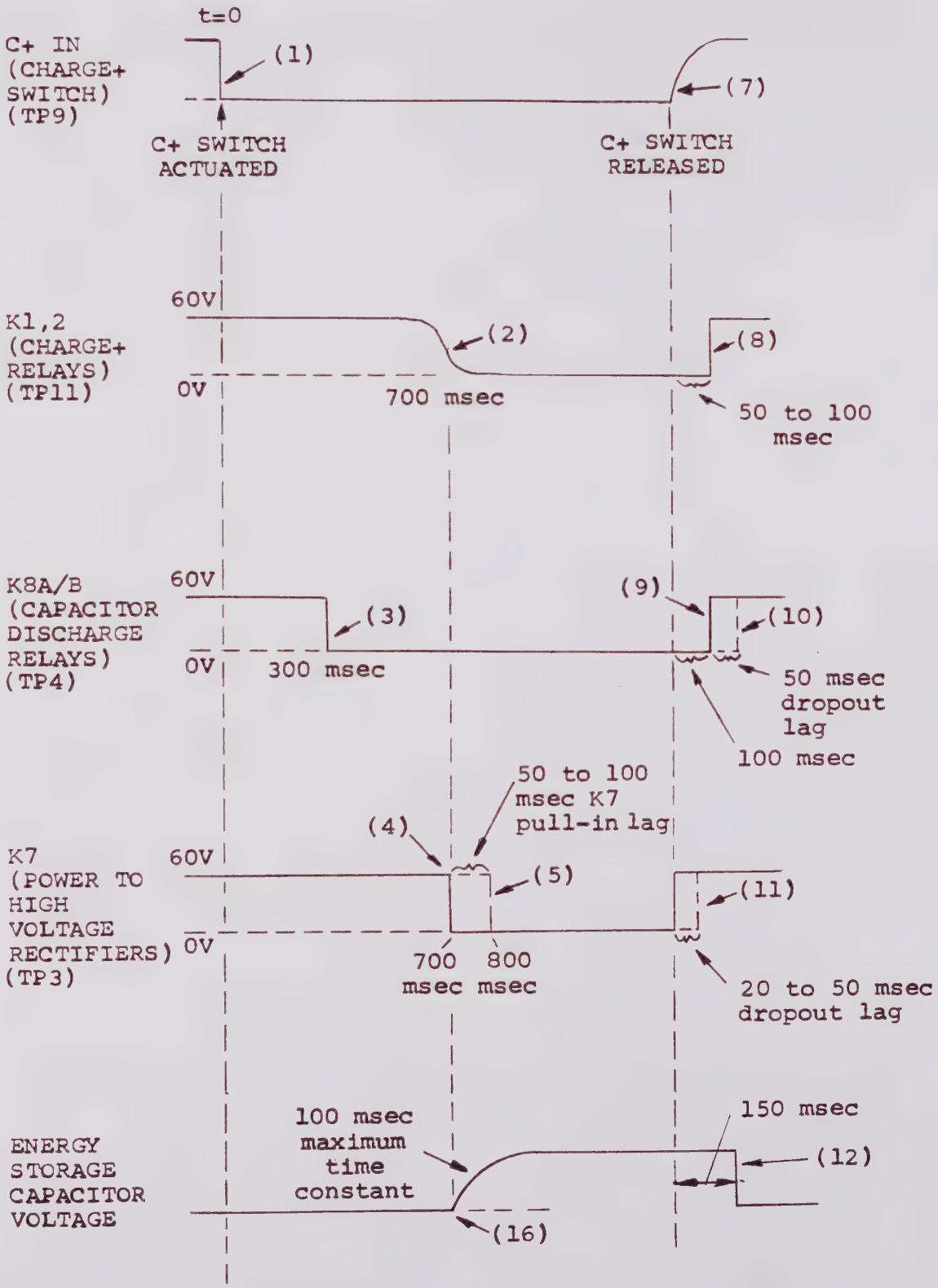


FIG. 3-5
CHARGE/DISCHARGE TIMING
(All voltages standard logic levels except as noted)

This delay is significantly less than the pull-in delay for the same relays, by virtue of diode D1 which shunts pull-in delay resistor R6 for the drop-out direction of the Q1 output signal.

2. Block 2, K3,4 -- C- Circuit: analogous to C+ circuit

3. Block 3, K8A, K8B -- Capacitor-Shorting Relay Control: The drop-out of the K8 relays, reshorting the energy-storage capacitor via 200 ohms, is delayed until K7, the high-voltage connect relay, has opened. K7 must open before K1 and K2 open, so that during other possible abort modes (abort during charge, for instance), K1 and K2 will still not be required to interrupt high-voltage while passing current.

   The 100 msec delay required for K8A/B is obtained via capacitor C 6A and resistor R26 at the input to transistor inverter Q9,10, that drives the K8A and K8B coils in parallel. Since K8A and K8B are heavy-duty relays, their drop-out time is on the order of 50 msec. Drop-out command is shown as point (9) on the K8A/B wave, and actual relay re-connect at point (10) on the same diagram.

4. Block 4, K7 -- High Voltage Primary ON Circuits: K7 must drop before K1, K2 or K8, to eliminate the possibility for current flow through K1 or K2 into the capacitor if charge is not complete, or into the K8A/B Series 200 ohm bleeder.

   K7 drive is opened coincident with point (7), namely as soon as C+ is opened. This occurs via a 'back contact' on both the Charge (+) and the Charge (-) switches. The ground on the arm of the Charge (+) switch is applied through these contacts via diode D2, directly to the input of Q16,17 drivers for K7. This signal thus passes all other time constants involved. As shown in the K7 wave in Fig. 3-5, at point (11) K7 drops out in about 50 msec, well before the 100 msec drop-out of K1 and 2 (point (8)) and the 150 msec re-closing of K8A/B (point (10)).

   The energy storage capacitor is shown being discharged at point (12) on its wave in the same Figure. Actual time constant of the discharge will lie between 5 and 14 msec, depending on the storage capacitors selected by the particular Programmer Network being used.

### 3.3.3 Simultaneous Charge (+) / Charge (-)

Relay control circuitry timing must cope with the possibility that both Charge (+) and Charge (-) switches are depressed simultaneously, in either order. Referring to Fig. 3-4, if

Charge (+) is depressed and then Charge (-) is actuated, the normal Charge (+) functions will be carried out, since the arm of the Charge (+) switch carries the actuating ground potential, and it is not available through the Charge (+) 'back' or normally-closed contact to the Charge (-) switch under these conditions.

Timing diagrams for the opposite situation, namely Charge (+) depressed after Charge (-) is depressed and held down, are shown in Fig. 3-6. C- is taken as the actuating signal, at point (13) in the Figure. The resulting performance of K3,4 is identical with that for K1,2 in the C+ actuation case of Fig. 3-5. Similarly, resulting performance during the charge mode for K8 and K7 is likewise identical to that of Fig. 3-5.

T time t = T, an arbitrary interval longer than about a second after C- has been depressed, C+ is depressed as shown at point (14) on the C+ wave in Fig. 3-6. The C- wave is forced to return to its high state at this time, as shown by the dotted line, since its ground actuation has been removed.

K3 and K4 drop-out 100 msec later as shown at point (15), for reasons identical with the drop-out of K1,2 at point (8) in Fig. 3-5. Similarly, K1,2 are actuated 700 msec later at point (16) as shown, again analogous to actuation of K1,2 in Fig. 3-5 (point (2)), or with K3,4 in Fig. 3-6.

Performance at this point is different for K7 and K8, however. Since the back contacts of the C+ and C- switches in this instance do not carry ground via diode D2 directly to the K7 driver, it remains actuated until the end of the K3,4, 100 msec drop-out delay. Meanwhile, even though the input signal to Q9,10 is instructing K8A/B to drop back to their normally closed state, thereby shorting the capacitor via the 200 ohm bleeder, diode D4 from the output of the K7 drivers Q16,17 and the K8 drive point at the Q9,10 output maintain K8A/B actuated, hence open. Thus, there is no change until the end of the 100 msec K3,4 drop-out delay; at which time K3 and K4 open, under zero current-flow conditions since the capacitor is fully charged. Their dropout allows K8A and K8B to simultaneously open some 50 msec later. (Due to the relays involved, K7 opens before K8, disconnecting high voltage before the capacitor is discharged.) The capacitor discharges through the K8A/B, 200 ohm bleeder. The K7 and K8A/B delay circuits then resume normal operation, generating the start-up 300 msec delay for K8A/B (point (17)) and the 700 msec delay for K7 (point (18)) as before.

### 3.3.4 Pulse

Fig. 3-7 shows timing for the conventional operational sequence, Charge followed by Pulse. C+ is shown, but an analogous situation applies to C-.

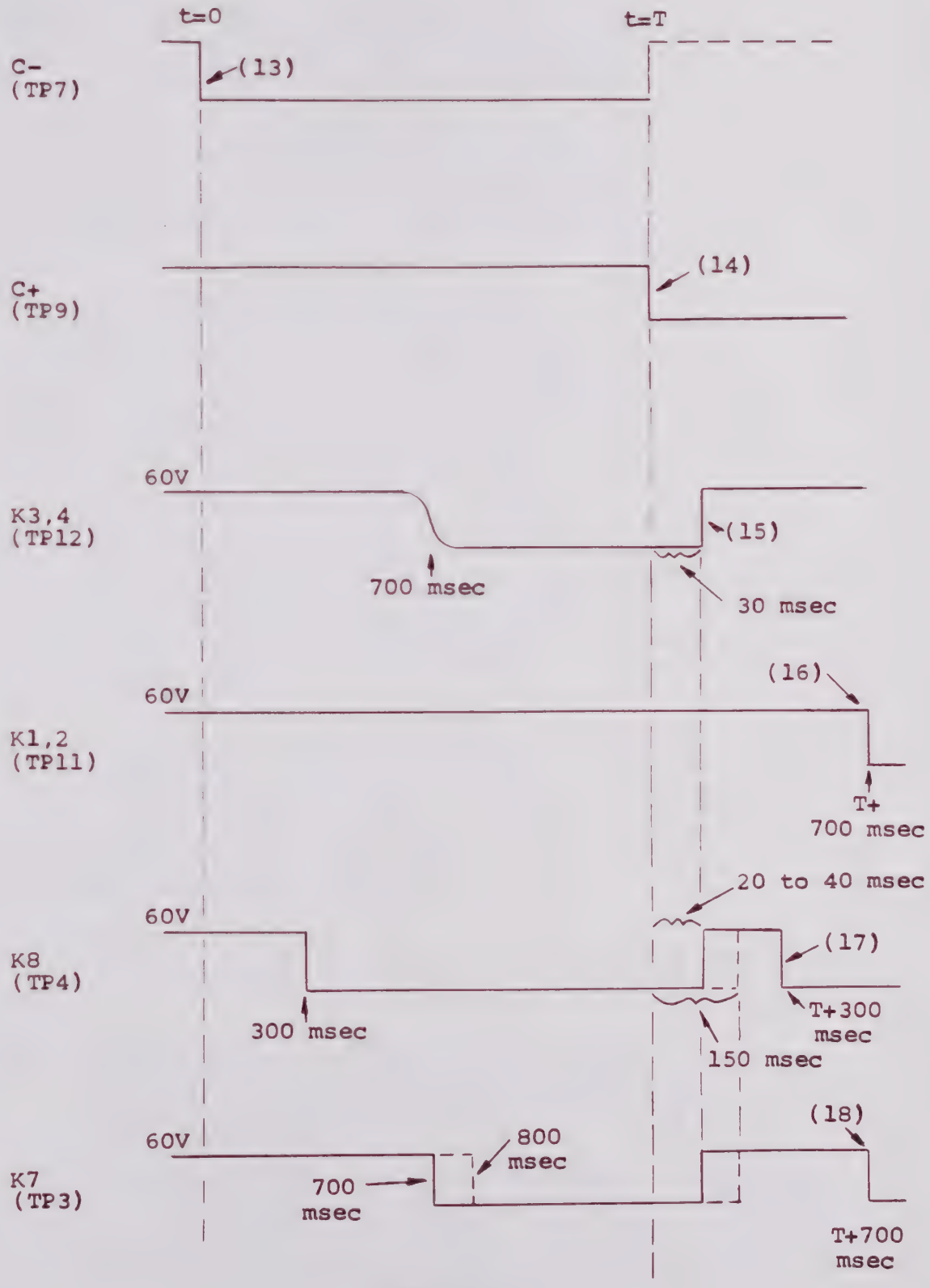


FIG. 3-6
SIMULTANEOUS CHARGE+/CHARGE-
TIMING
(All voltages standard logic levels except as noted)

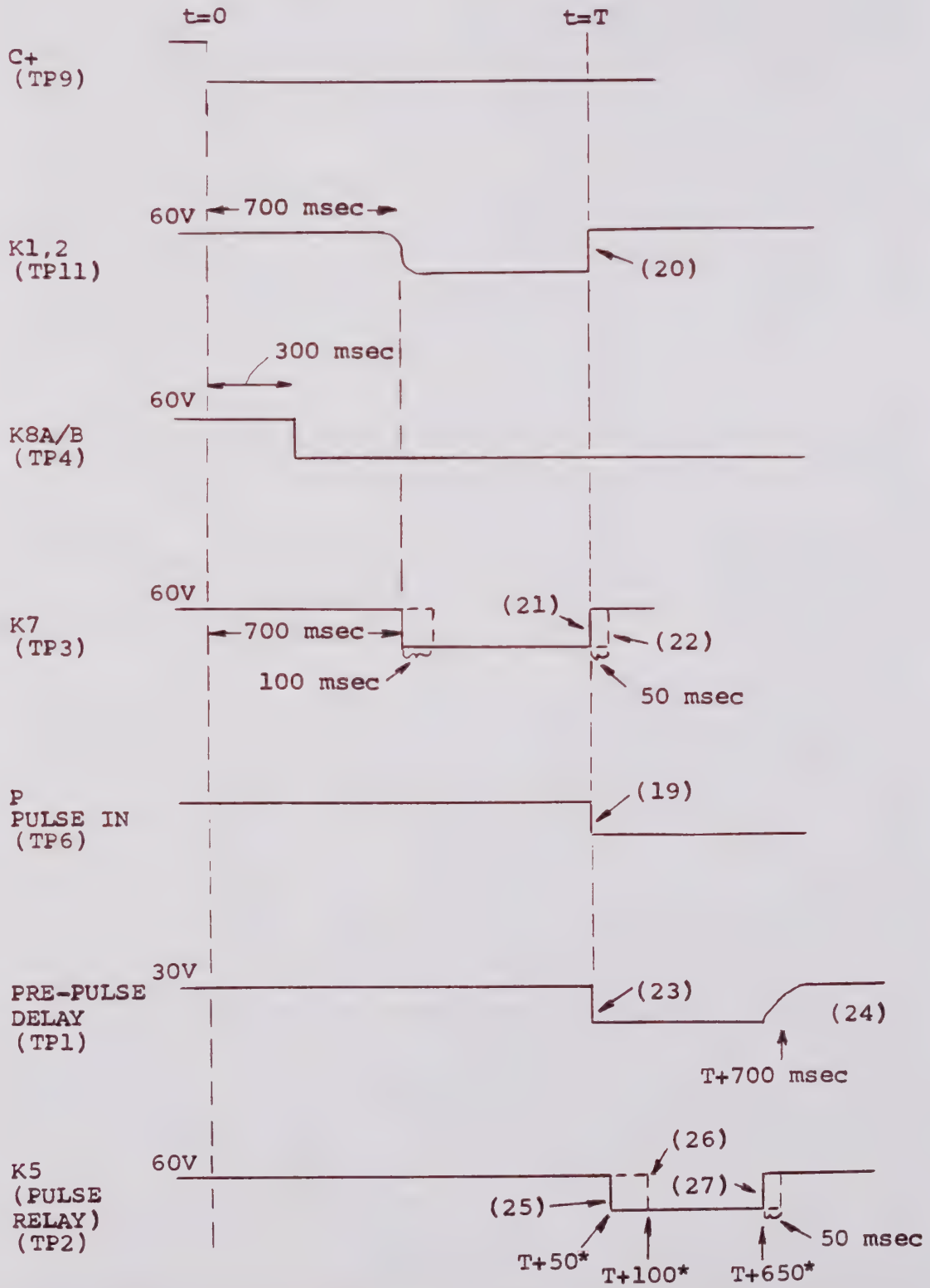


* Add approx. 50 mS serial nos. over 78XXX. Also, reduced and controlled by LS options.

FIG. 3-7

PULSE TIMING

(All voltages standard logic levels except as noted)

Initial Charge delays are as before, in Figs. 3-5 and 3-6. At time T, however, the Pulse switch is actuated, applying the presumed ground potential at its arm (see Fig. 3-4) to the Pulse In terminal, pin 9. This signal, termed P and designated (19) in Fig. 3-6, directly turns off the K7 driver by turning off K1,2 and K3,4, by means of diodes D2 and D4 directly connected to the P input line. Immediate dropout of K1,2 occurs at point (20) in Fig. 3-7, immediate removal of K7 drive at point (21). Actual opening of the K7 contacts is shown at point (22) on the K7 wave, taking place at the normal 50 msec drop-out delay later.

The Pre-Pulse Delay signal is generated via the differentiator C10, R56 in Fig. 3-4, at the input to transistor inverter Q21,22. The values involved coupled with the transistor thresholds, generate the approximately 700 msec wave shown in Fig. 3-7, with leading and trailing edges at points (23) and (24). This signal, available for use with specialized options of the Model 424, in turn actuates the Pulse relay (K5) drivers Q23 and Q24, via a delay network composed primarily of R59 and C11,12, making up about a 50 msec delay (point (25)). When the K5 turn-on delay of about 50 msec is added (point (26)), this circuit insures that K5 will not conduct the stored high voltage on the capacitor to the Programmer pulse-forming Network, until K7 (and of course K1,2) contacts have actually opened. In this way, 'floating' operation of the high voltage circuit is obtained. Only the charged capacitor is connected to the load via the pulse-forming network, not the charging circuit with its complex impedance to various system gournds.

At the end of the interval defined by the input differentiating delay (C10, R56), both the K5 drive and then Pre-Pulse Delay waves return to their normally high states as shown at points (27) and (24) respectively. While not shown on the simplified schematic of Fig. 3-4, the Pre-Pulse Delay terminates after the K5 drive because of voltage levels involved in the respective transistor drive circuits.

## 3.4 Wave Shaping

There are two basic kinds of waves generated by the Model 424:

1. Impulse waves with simultaneously-defined virtual front times and virtual durations, in which both rise and fall are essentially exponential (see section 1.3 for wave definitions), and

2. Rate-of-rise waves, with highly-linear slopes over 2/3 to 3/4 of their nominal peak values; and relatively unimportant "tails" or decay times. These waves are most useful for gas-tube and carbon block arrester tests.

The impulse wave includes such standards as the 10 x 1000 used heavily in telecommunication work. It also includes the 8 x 20, 1.2 x 50 and 10 x 50, used for simulating power-line transients and device testing. (See section 1.3, Waveform Definitions)

The second, or linear rate-of-rise wave, ranges from 100V/usec to 10kV/usec and higher, and is used primarily in testing gas-tube and carbon-block arrester breakdown.

### 3.4.1 Programmer Networks

The first or impulse wave type is generally shaped via a series inductor L and shunt resistor r, as in the simplified schematic of Fig. 3-8 (a). The energy-storage capacitor C is connected via relay contacts to the network composed of the inductor and resistor. Generally, the rC product determines decay time; the L/r time constant establishes the virtual front duration. For waves like the 8 x 20 and even the 10 x 50, with roughly comparable front and decay times, both become functions of all three circuit parameters. Series resistor $\rho$ is optional.

Actual networks used for shaping the exponential waves in the Model 424 all include resistor buffering between L-r output and the instrument output terminals, as in Fig. 3-8 (b). This network is basically the same as that of Fig. 3-8 (a), but includes five resistors of graduated values, connected to the output via a five-position selector switch. The resistors serve two functions: to buffer the network against loading that might excessively modify waveshape, and to furnish an upper limit for short-circuit current.

Fig. 3-8 (c) shows a simplified, basic rate-of-rise network. L and $C_2$ constitute a series-resonant circuit, damped by $R_1$ for open-circuit output. Thus, application of 1500V from $C_1$ via relay $K_5$ can result in a peak output much higher than the 1500V driving voltage, depending on the Q of the $R_1LC_2$ circuit; given by $2\pi fL/R_1$. In general, in the Model 424 the Q is set to achieve a "magnification" between 1.25 and 1.35. As a result, for rate-of-rise waves the output peak is on the order of 2kV for 1.5kV in. Thus, the front panel meter setting is the 'plateau' which the circuit achieves after the initial overshoot and one-to-three rings have died away.

The purpose of using the resonant circuit of Fig. 3-8 (c) is that is is exceedingly linear over the first seventy percent or so of the actual peak; or to 1000 or 1200V. (It is still useably linear even to 1500V.) r, a direct shunt across storage capacitor $C_1$ after $K_5$ closes, is the only component providing decay if the output remains open circuited. Of course, if and when a gas-tube or other breakdown (or limiting) device under

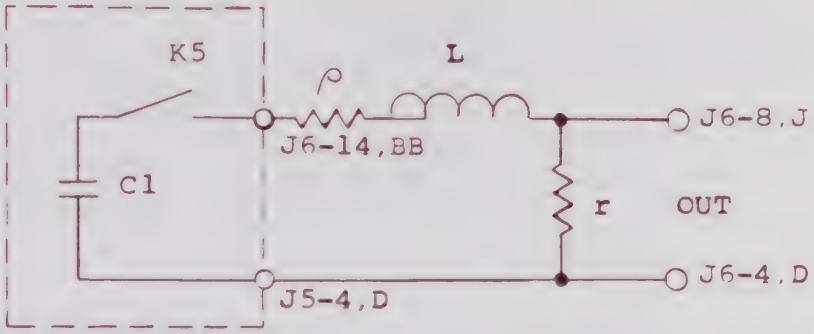


FIG. 3-8(a)
BASIC L-R NETWORK

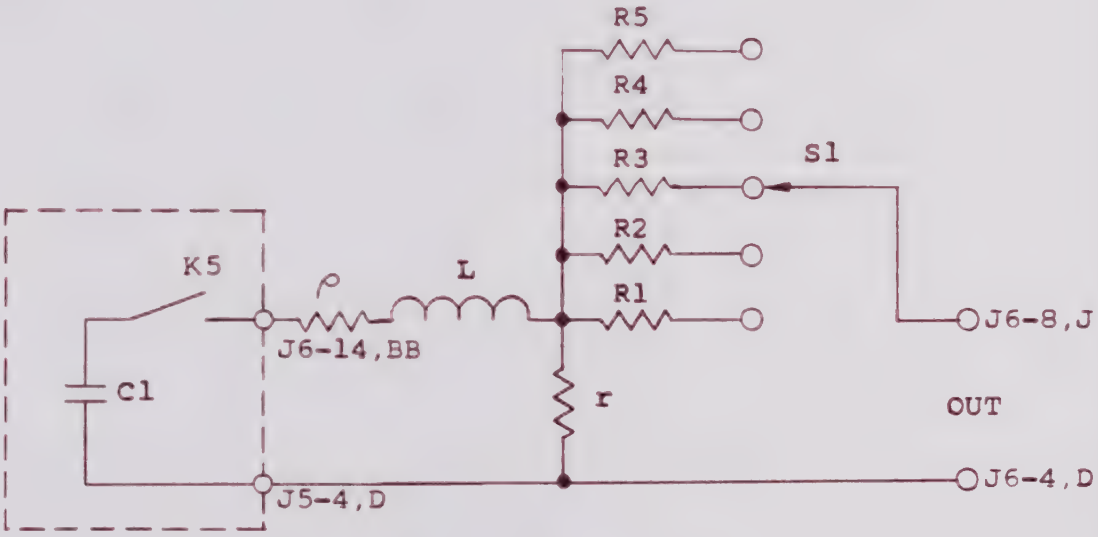


FIG. 3-8(b)
BUFFERED L-R NETWORK

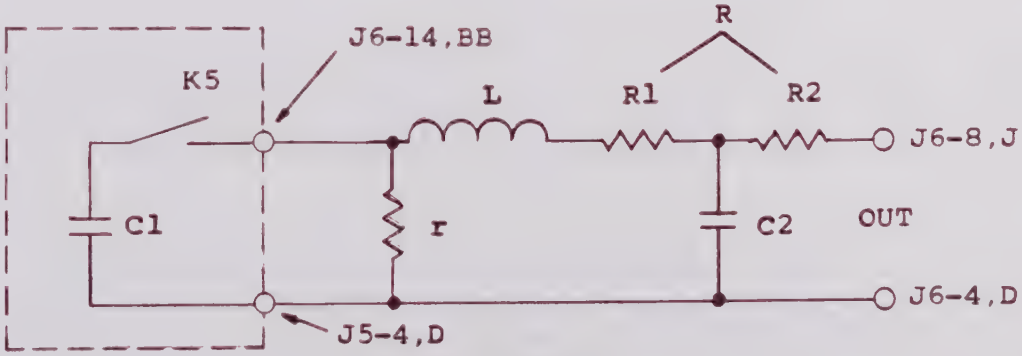


FIG. 3-8(c)
BASIC RATE-OF-RISE NETWORK

FIG. 3-8: WAVE-SHAPING NETWORKS

test conducts, then the series combination, R1 + R2 = R, also shunts C1 and decreases decay time. In addition, R2 reduces circuit Q to almost completely eliminate network ringing. The difference between open-circuit voltage and short-circuit current for this circuit, unlike those of Figs. 3-8 (a) and 3-8 (b), therefore, is great. Open-circuit voltage is a linear rate-of-rise with overshoot and ring, followed by a modest decay; short-circuit current, because of the values involved, is usually an exponential rise with little or no overshoot or ring, followed by a swifter decay. For most devices including gas tubes and most tests on carbon block arresters, waveshape after breakdown is not of real significance.

In actual rate-of-rise Programmer Networks like the PN 246, both the inductor L and the resonating capacitor C2 must be switched to obtain different rates-of-rise. In addition, the series 0.001 mfd -- 27 ohm output termination, supplied as part of the Model 424 but housed in a dual-banana jack plug-in for user-mounting at the instrument's output terminals, and discussed in Section 2.5.1, becomes a significant part of the pulse-shaping network at rates of rise exceeding about 1 kV/usec. (Below that rate, and for all other impulse waves, the termination is still mandatory to obtain specified performance by minimizing reflections.)

The network of Fig. 3-8 (c) has the advantage that none of the energy stored on capacitor $C_1$ need be shunted away, for r infinite or at least very large; hence, it is all available for the load. This is of little significance for short waves like the 8 x 20, but can be important for the 10 x 1000. It thus offers the quite traditional prospect of generating a rate-of-rise voltage wave with an exponential, classic current waveform like the 10 x 1000, to maximize energy transfer to the load for a given size energy-storage capacitor C1, and a given high-voltage. This method is used to get 10 x 1000 current waves of 60A in the PN 241, 250A in the PN 250 and 500A in the PN 251.

### 3.4.2 Scaling and Metering

With some waveforms, it is possible to deliver voltage peaks to the load that are almost equal to the dc voltage stored on the capacitor. These include waves for which the rise time is a small percentage of the decay, such as the 1.2 x 50 and the 10 x 1000. Ohter waves, most notably the 8 x 20, haven't reached their peak before they start down again; hence, only reach a fraction of the stored dc.

To make up for the discrepancies between network dc requirements for a given output, some of the Programmer Networks are rated at 1000V, while others deliver the full 1500V. In all cases, for exponential impulse waves the reading on the front-panel, peak open-circuit voltage meter is scaled by the Programmer em-

ployed. The meter therefore, reads not the stored dc, but rather the actual open-circuit peak that will be delivered for the particular wave.

For the rate-of-rise networks like those of Fig. 3-8 (c), the peak open-circuit meter reading is not the overshoot voltage. Instead, it shows the 'plateau' to be reached after the initial two or three rings, just before the start of the exponential decay.

## 3.5 Peak Measurement and Display (Fig. 3-9)

The two peak detectors that transform measured voltage and current peaks into dc levels for digitizing, are common in design to both voltage and current peak measurement channels. Also common are the basic digitizing and display techniques. The several differences between voltage and current channels are:

1. Voltage peaks are measured using a shielded resistive attenuator; current peaks are measured by means of a shielded current transformer.

2. Voltage ranges of 1 kV or 100V are manually selected by front panel switching. Current ranges of 1 kA or 100A are automatically selected by the Programmer Network being used. For this reason, over- and under-range indications are needed for voltage but not current. Voltage display resolution is 1 V on the 1 kV range, 0.1V on the 100V range; while current resolution is 1 A on both 1 kA and 100A ranges.

3. The voltage Go/No Go circuitry operates by giving a go indication for peak voltages less than the front-panel-preset limit, indicating that the protector under test has limited, or breakdown has occured, below that figure. The current Go/No Go circuitry operates by giving a go indication for peak currents greater than the front-panel-preset limit, indicating that external connections are sufficiently low in resistance to pass the full programmed test current.

Fig. 3-9 is a block diagram of the Peak Monitors in the Model 424. Dotted lines in the Figure surround separately identifiable, or portions of separately-identifiable sub-assemblies; solid lines surround functional blocks within the sub-assemblies.

The energy-storage capacitor is discharged into the Programmer Network (1) as shown in Fig. 3-8, where wave-shaping networks form the desired pulse. This pulse is applied, low-end via the Current Transducer (2) in Fig. 3-9, to the Out Hi-Out Lo terminal pair in the output terminal array located on the front panel, (3) in Fig. 3-9.

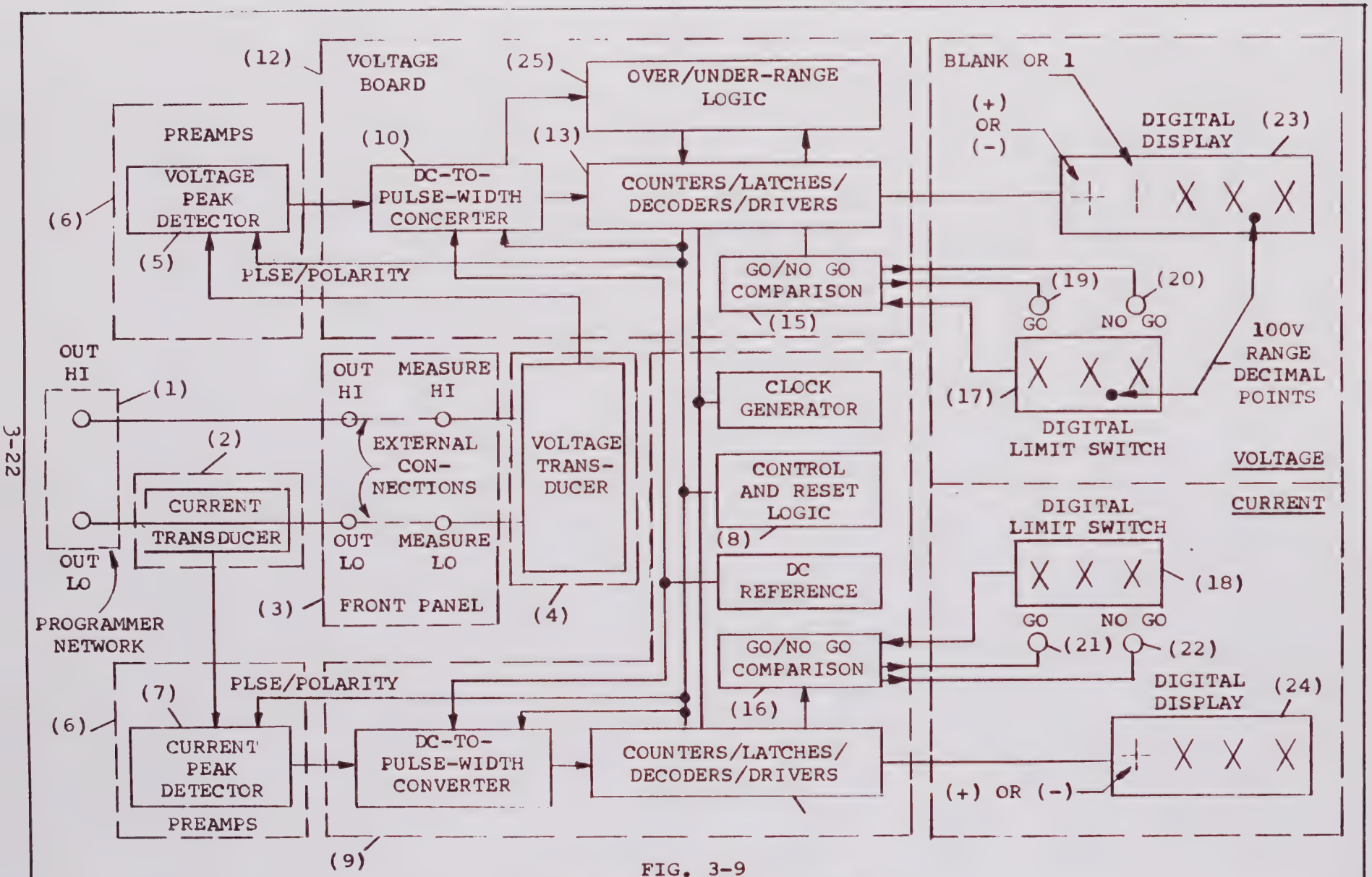


FIG. 3-9
PEAK MONITORS BLOCK DIAGRAM

External jumper connections, dotted lines in the figure, connect Cut Hi to Measure Hi and Cut Lo to Measure Lo terminals, and the Measure Hi-Measure Lo terminal pair then furnishes the Voltage Transducer (4) with the peak Cutput voltage, presumably measured at the load being surged. (Cut Hi and Measure Hi may be connected to different points in a network or circuit under test: see Section 2.9.4, Testing RLC Surge-Suppression Networks, Passive Circuits, Systems.) The Voltage Transducer reduces the peak to a full scale of 5V for application to the Voltage Peak Detector (5) located within the Preamps sub-assembly (6). Similarly the Current Transducer (2) output, also scaled to 5V full scale, is applied to the Current Peak Detector (7) located in the Preamps (6) as well. Note that voltage and current peaks may occur at different times, and the Monitor System does not require their coincidence.

Both peak detectors are 'primed' by an allow signal from Control and Reset Logic (8) located on the Current PC board (9) designated 'PLSE' in subsequent descriptions and on the detailed schematics. Similarly, both peak detectors receive polarity information -- in effect, indication of whether the Charge (+) or Charge (-) switch is depressed -- from the same Control and Reset Logic (8) The signal carrying this information is designated POLARITY in later references, and is high for a (-) ouput pulse.

Outputs from the Voltage and Current Peak Detectors are applied as dc inputs to the voltage and current DC-to-Pulse-Width Converters, (10) and (11) respectively, located on the Voltage and Current PC boards, (12) and (9) respectively. Each Converter furnishes an output gate whose duration is proportional to the respective Peak Detector dc output, in turn proportional to the value of the measured voltage or current peak. It is then sufficient to count pulses from a stable clock or pulse generator during each of the two output gates, to get digital representations for the voltage and current peaks being measured.

The counting operation is carried out by multi-purpose integrated circuits, incorporating not only counters but also latches for storage and decoder-drivers for the seven-segment LED displays. These Counters/Latches/Decoders/Drivers are designated (13) for voltage and (14) for current, and are located on their respective PC boards. They also provide BCD outputs, which are used for Go/No Go comparison with front panel digital-switch settings for allowable peak voltage and current limits. The Go/No Go comparators are shown as (15) and (16) for voltage and current, respectively. The digital limit switches are designated (17) for voltage and (18) for current. Each digital switch can be set to a maximum of 999, hence, the designations XXX in the figure. Note the 100V range decimal point location in the voltage limit switch, lit whenever that range has been selected.

Results of the Go/No Go comparisons are displayed on appropriately-colored front panel Go and No Go lights; (19) and (20) for voltage, (21) and (22) for current; with green for Go and red for No Go in each case. For voltage, Go means a peak less than the preset limit; for current, Go means a peak greater than the preset limit.

Outputs from the Counters/Latches/Decoders/Drivers also furnish drive to the front panel decimal readouts, (23) and (24) in the Figure. Both readouts present sign information, corresponding with the sign selected for the discharge or pulse polarity via selection of the (+) or (-) Charge polarity. The voltage display allows three digits plus an overrange "1" nominally allowing a maximum reading of 1999, but circuit-limited for display purposes to 1599 as a maximum usable figure. The figure shows a dotted "1" followed by XXX. A decimal point is also furnished for voltage, allowing maximum readings on the 100V range of 139.9V, again circuit-limited. For current, only three digits are furnished, therefore, the designation XXX in the figure.

The Voltage board also houses the Over-/Under-Range logic, (25), that senses that signals are over 139.9V or 1599V on the 100V or the 1 kV range respectively, or under 40V on the 1 kV range. Also included are circuits for blinking the Over-/Under-Range front panel light, plus blanking (for over-range) or blinking (for under-range) for voltage digital display and go/no go indications.

### 3.5.1 Voltage Transducer

The Voltage Transducer (5) in Fig. 3-9 is shown in greater detail in Fig. 3-10. Its purpose is to reduce the measured high-voltage peak signal -- as great as 1599V -- to a level that can be measured with a semiconductor peak detector. The Measure Hi-Measure Lo front panel terminal pair is shown, in Fig. 3-10, connected to the input to the Voltage Transducer assembly, which is a coaxial, switched resistive attenuator. In the 1 kV range relay KV is open as shown, and the attenuation ratio is very nearly the ratio of 10K to the 50-ohm coaxial termination resistance, or 200:1. Thus, a 1 kV input will yield a 5V output; or the Voltage Monitor Output and peak detector scale factors will be 200V/V.

In the 100V range, relay KV is actuated. Its contacts parallel the 1.05 K resistor with the 10 K for a parallel combination of essentially 950 ohms; yielding an attenuation ratio of about 20:1. Thus, a 100V input will yield a 5V output; or the Voltage Monitor output and peak detector input scale factors will be 20V/V.

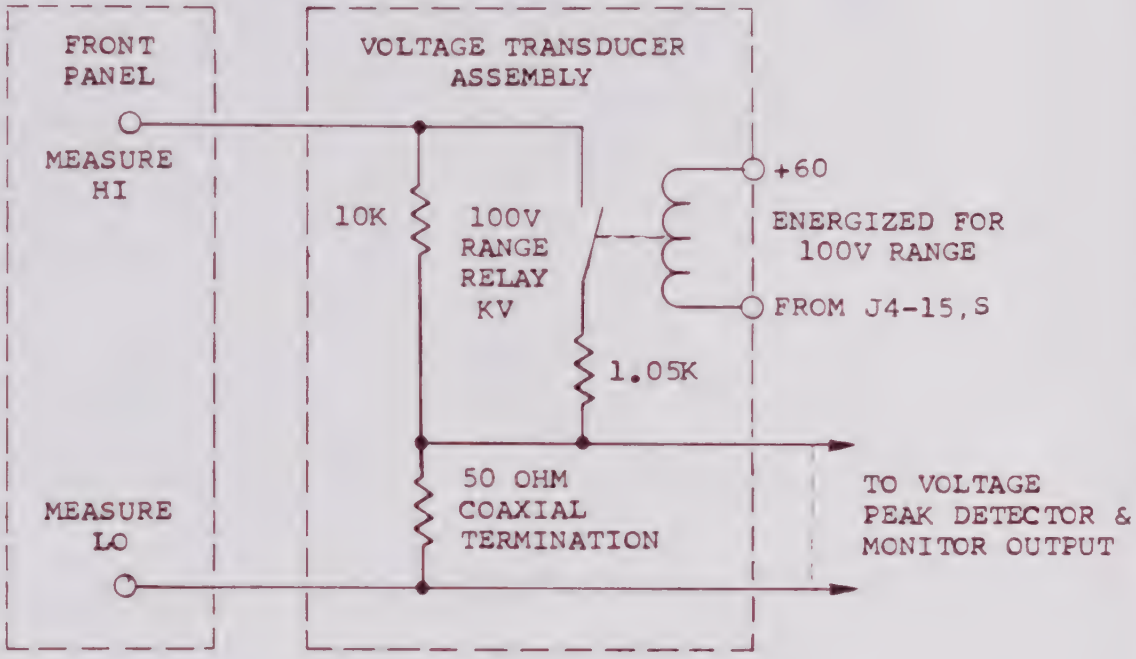


FIG. 3-10
VOLTAGE TRANSDUCER

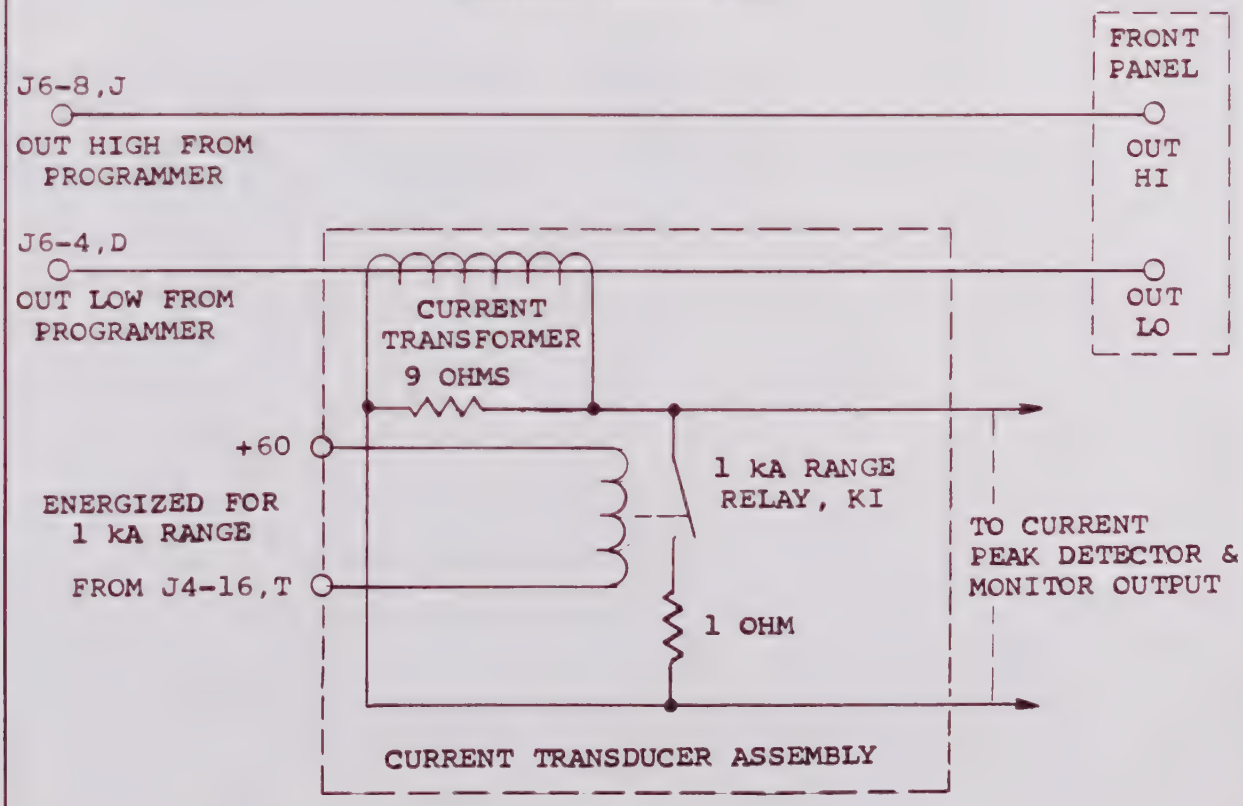


FIG. 3-11
CURRENT TRANSDUCER

### 3.5.2 Current Transducer

The purpose of the Current Transducer is to convert the current flowing in the Out Lo lead, into a proportional voltage which can be measured by the peak detector and subsequent circuitry, for eventual front panel display. The Out Lo connection between the Programmer Network and the Out Lo terminal on the front panel is routed through the center of a current transformer core, as shown in Fig. 3-11. The current transformer and its switched loading networks are located within a double-shielded enclosure because of the low signal levels involved, compared with the far higher levels in the Model 424 output pulse generating circuitry located nearby.

The current transformer's output is loaded with a 9 ohm resistor in the 100 A range. In the 1 KA range, relay K1 adds a parallel 1 ohm resistor to provide about 0.9 ohm for the combination. Since the transformer's current step-down ratio is about 180:1, these resistor loads provide 5V peak output on both 100 A and 1 kA ranges. Thus, both the Current Monitor output and the current peak detector operates at scale factors of 20 A/V and 200 A/V on the 100 A and 1 kA ranges respectively.

### 3.5.3 Peak Detector

The virtually identical Peak Detector blocks, (5) for voltage and (7) for current in Fig. 3-9, are shown in greater detail in Fig. 3-12.

The basic peak detector is a closed-loop, op amp operated design, with A1 the principal op amp. It drives a peak detecting diode D7, which charges the peak storage capacitor (C11,13). The capacitor is buffered by Fet transistor Q7, whose ouput feeds back to the A1 input. Amplifier A2 provides polarity inversion for negative input peaks. Switch Fets Q1,2,3 and 9 select either the input or the inverted input pulse from A2, so that the input to A1 is always positive, and the peak detector's output consequently always negative.

The input from either the Voltage (V) or Current (I) transducer is applied, as indicated in Fig. 3-12, to an input coupling network. This network supplies a transfer function according to the range employed. A 100V range input control signal is supplied from the Measurement Board (designated $\overline{\text{100VR}}$ in the figure.) Outputs from the Input Coupling Network include a (+) peak signal applied to resistor R2, or a (-) peak signal applied to resistor R23, depending on Model 424 output pulse polarity. The (-) peak input applied to R23 is inverted by op amp A2, with feedback resistor R24 equal to R23, providing unity gain. Zero adjust potentiometer R30 allow separate dc op amp zeroing, so that detector zero is unaffected by output pulse polarity. This is a factory adjustment and normally will not have to be readjusted unless A2 is changed.

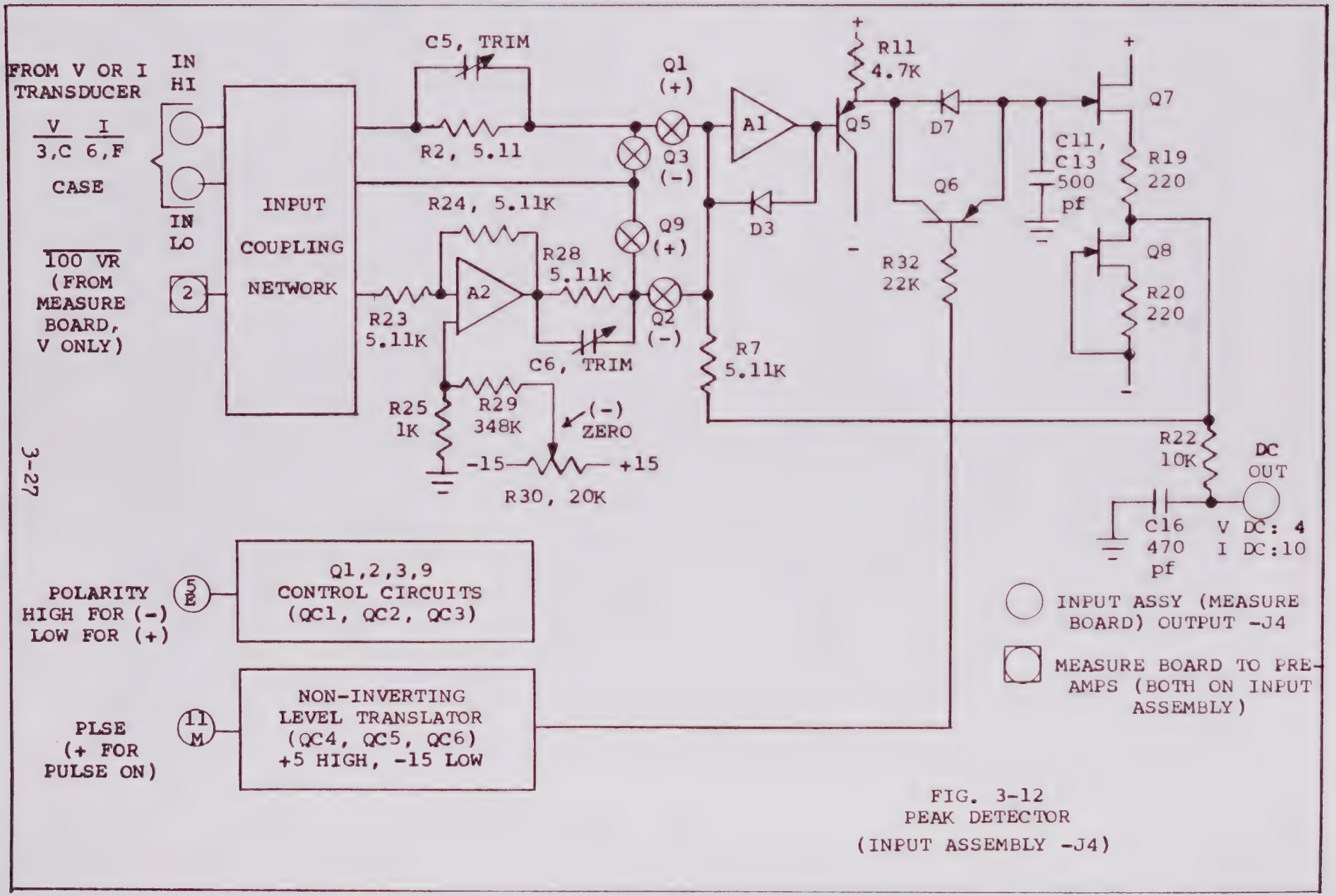


FIG. 3-12
PEAK DETECTOR
(INPUT ASSEMBLY -J4)

For a (+) Charge polarity selection, the (+) peak output from the Input Coupling Network is applied to the input resistor R2 of op amp A1. This resistor is coupled to the A1 summing junction (SJ) since the Field-effect transistor (Fet) switch Q1 is closed. At the same time, the shunt-to-ground Fet switch Q3 is open. Still presuming a (+) polarity selection, shunt Fet switch Q9 at the output of A2 will short the A2 output to ground via resistor R28, while Q2, the Fet switch that couples the A2 output to the A1 SJ via R28 when closed, is open.

For a (-) Charge polarity selection, the opposite situation occurs: the (-) peak from the Input Coupling network, after inversion by A2, is allowed to pass to the A1 SJ via Fet switch Q2, with Q9 now open. At this point Q1 is open, and Q3 shorts any residual or feedthrough term from the R2, (+) peak input path to ground..

Fet switches Q1,2,3 and 9 are controlled by the Polarity input to the Peak Detector. The Polarity input supplies a block housing control circuits made up of transistors QC1, QC2 and QC3. These circuits are common to the virtually identical voltage and current Peak Detector channels. High frequency response is adjusted via trim capacitors C5 for (+) pulse outputs, C6 for (-) pulse outputs.

Amplifier A1 is the peak-detecting op amp. Its output drives buffering emitter-follower transistor Q5, which in turn drives the peak-detecting diode D7. The op amp output, via Q5 and D7, charges the storage capacitor made up of C11 and C13 in series. The output from this composite capacitor is buffered by field-effect transistor Q7, with a current source emitter load comprised of Fet Q8 and resistor R20. Overall peak detector feedback derives from a resistor R19 connected to the terminal of output Fet Q7 as shown. Feedback is via resistor R7. The entire peak detector output is also taken from the same point.

Auxiliary feedback is supplied by diode D3, to prevent A1 output from swinging positive. Independent of the Model 424 output pulse polarity, after peak detection the A1 output polarity is always negative. Following it, so is the entire peak detector output. Inversion and polarity selection have already been accomplished via the inversion of A2, and the signal path selection by Fet switches Q1,2,3 and 9.

The dc output proportional to peak input drives the dc output terminal designated PkV, via a 10 K resistor R22. This resistor furnishes both capacitance- and noise-isolation for the high-speed output stage and the overall feedback amplifier. It also makes the peak-detector output itself unavailable outside the the shielded Preamps case in which both Peak Detectors are housed. Capacitor C16 furnishes noise filtering.

The dormant/ready mode selection for the peak detectors is made by the PLSE signal. It is high whenever the operator actuates the front panel Pulse switch, generating an output pulse. It is applied to a non-inverting level translator using three transistors, QC4,5 and 6; used for both Voltage and Current peak detectors. Level translator output controls the on/off state of transistor Q6, a bipolar pnp switch that parallels the peak-detecting diode D7. When the input to the Q6 base resistor R32 is negative, Q6 is "on". At this time, the amplifier comprising A1, Q5 and Q7 constitutes a normal feedback amplifier with input and output both essentially at zero. The peak detector is thus in a dormant state, unable to accept an input pulse or, for that matter, noise.

When the Q6 base is raised to a positive potential, however, it opens as an almost perfect switch, placing the peak detector into a 'ready' or 'primed' condition to await the input pulse. In this way the peak detector is 'primed' when the Pulse switch is depressed, and stays open until the largest pulse amplitude that occurs immediately thereafter.

### 3.5.4 DC-to-Pulse-Width Converter

The DC-to-Pulse-Width Converter blocks, (10) and (11) in Fig. 3-9, are shown in greater detail in Fig. 3-13. Since they are identical only one is shown.

The basic method used to convert peak-detector dc output to proportional gate width or time duration, is to integrate a fixed dc reference potential until the integrator output equals the dc to be converted. Opening a gate at the start, and closing it at the end of the integration, provides the required gate.

A1 is the integrator, driven by a -10V reference derived from the Current PC board (not shown). Its feedback or integrating capacitor, C1, is effectively shorted by switch transistor Q3, until an input peak is received. Since the A1 output is zero prior to an output pulse, and the peak detector likewise, the net input to the A2 comparator is zero prior to a pulse. Zero-adjust potentiometer R16 offsets the A2 comparator zero so that its output is safely (+) for zero in.

When a peak is detected by the peak detector, its output steps negatively. Since it is coupled through its 10 K output resistor and 10 K resistor R7 in Fig. 3-13 to the A2 positive summing junction (SJ), the A2 output jumps positive. This transition signals the start of a pulse period that will be proportional to the dc from the peak detector. The A2 output, presuming a count allow (CA) signal is available from control logic on the PC board, sets the flip-flop comprised of the two dual-input gates labelled "1". This flop in turn, through driver transistors Q4 and Q5, opens the Q3 short across A1 and

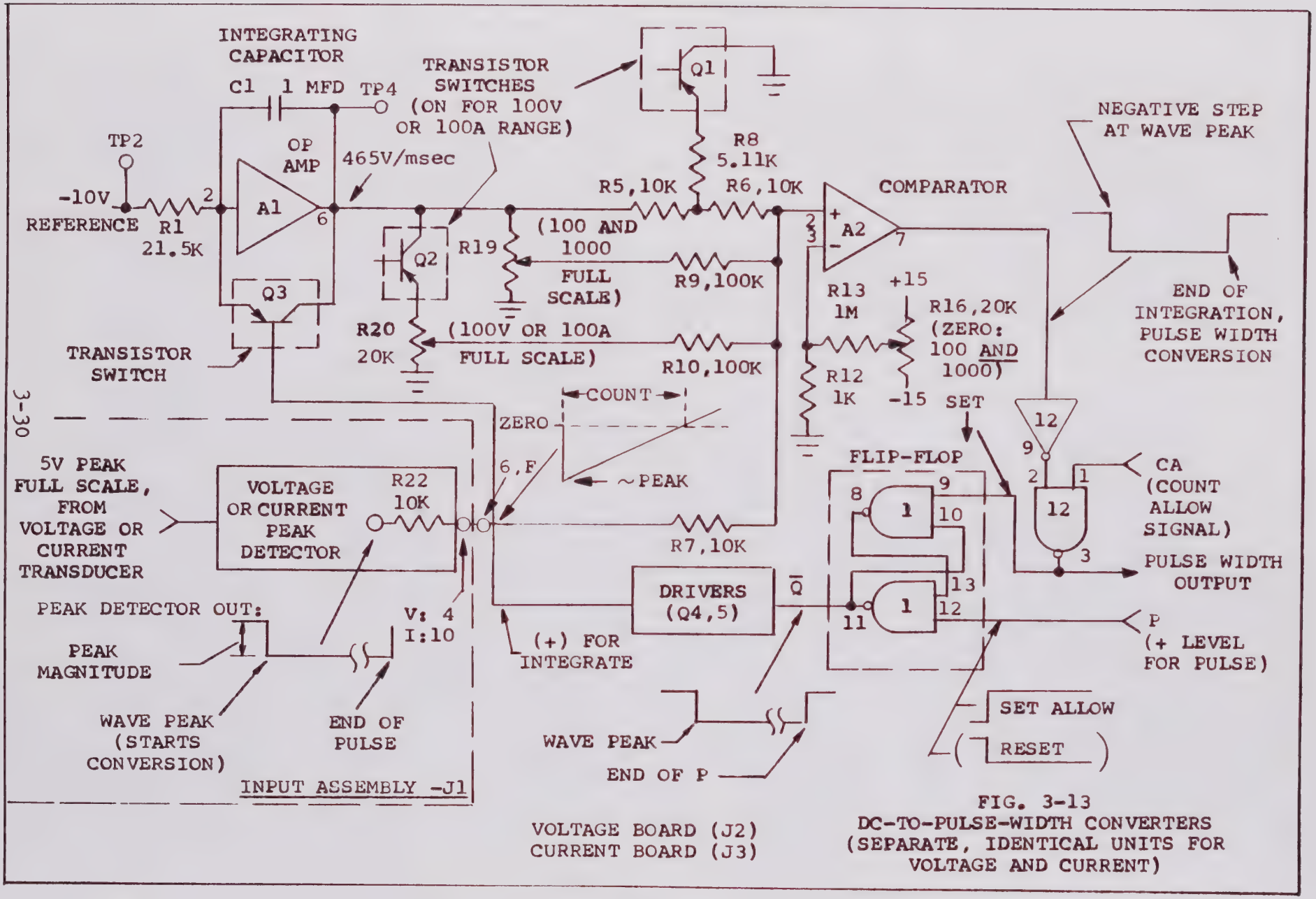


FIG. 3-13
DC-TO-PULSE-WIDTH CONVERTERS
(SEPARATE, IDENTICAL UNITS FOR VOLTAGE AND CURRENT)

allows it to start integrating.

The output of integrating amplifier A1, a ramp with positive slope of about 500 mV/msec, is added to the peak-detector output at the (+) SJ of A2. The integrator's output is positive, while the peak detector's is negative. Therefore, when the magnitude of the current the integrator contributes to the A2 junction equals the peak-detector's contribution via R7, the comparator output will again change state. It returns to its initial (+) output, signalling the end of the output gate. When gated by the count allow (CA) signal, the A2 amplifier output constitutes the desired gate or pulse width proportional to peak detector input amplitude. It is furnished to the display counter, where it gates a fixed clock to obtain a count proportional to its duration.

### 3.5.5 Counters/Latches/Decoders/Drivers

Only one integrated circuit per decimal digit is required to carry out counting and latching, as well as decoding and driving for seven-segment LED display. However, several of the IC functions are used in unusual ways. Fig. 3-14 shows the devices in block form for Voltage.

(+) and (-) indications are included with both current and voltage digital displays. They are driven for convenience by the decimal point outputs from the least-significant digit chips. (Higher-significance digit chips may be blanked.) The decimal point display for voltage is driven directly from the 100V range logic signal, via transistor Q14 on the Voltage PC Board Assembly.

### 3.5.6 DC Reference

For both voltage and current DC-to-Pulse-Width Converters, The DC reference is a -10 volt signal generated on the Current Board. Fig. 3-14 shows the circuit in simplified form. Two feedback paths around operational amplifier A3 constitute a bridge. Resistor R74 and 6.2-volt reference zener D14 drive the (+) or regenerative feedback input, and a resistive divider composed of R76, 77 and 78 supply the (-) or degenerative feedback input. Output shunt diode D5 insures that the output cannot become positive and latch the loop with a positive output polarity.

The loop stabilizes when the voltage on the (-) summing junction equals that on the (+) junction, namely the zener voltage, 6.2V. Potentiometer R77 is adjusted to obtain exactly -10.00V at the A3 output. Since the output is constant, zener current is constant; and by this feedback technique, reference voltage is made essentially independent of changes in the amplifier supply voltages.

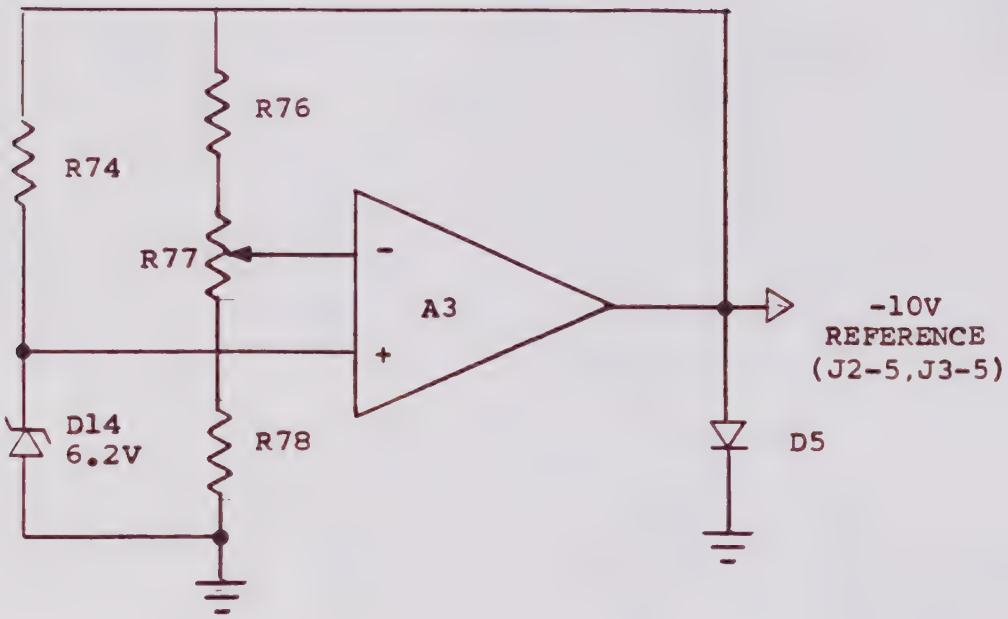


FIG. 3-14

DC REFERENCE

Operational amplifier A3 provides net positive feedback via the path through R76 and zener diode D14, until the output voltage reaches a level high enough to break down the zener; after which point the loop exhibits net negative feedback performance.

Prior to breakdown, the zener impedance is so high that there is less attenuation via the zener-controlled path to the positive summing junction than there is through the R76-R77-R78 resistive attenuator path to the negative summing junction; resulting in net positive feedback.

After the zener starts to conduct, its incremental resistance drops to around the 15 ohm level. Hence it provides more attenuation than that of the negative impedance path via the resistive attenuator; and net feedback becomes negative.

### 3.5.7 Clock

A 100 kHz pulse generator, or clock, supplies the Counters/Latches/Decoders/Drivers during the gate generated by the DC-to-Pulse-Width Converter. This stable frequency source is generated by an IC timer chip, (24) on the Current Board. Frequency is factory adjusted to 100 kHz, and is sufficiently stable with both time and temperature that it should need no readjustment over the life of the equipment.

### 3.5.8 Control and Reset Logic (Current Assembly)

While the Charge and Pulse commands are first processed on the control and High Voltage Board, they are used to generate Control and Reset Logic for the Monitor measurement process on the Current Assembly. Logic signals generated by this circuitry include:

| | |
|---|---|
| R | reset |
| $\overline{R_1}$, $\overline{R_2}$ | reset complements |
| CA | count allow |
| Polarity | determines polarity of peak detection |
| P | indication of pulse |
| (+) | signal to digital displays |
| K5A | "K5 actuated" signal, indicating that the main pulse relay K5 has been actuated, and the output pulse about to be generated |
| ZA | zero allow, to permit the least significant digit IC to actuate its display, even if the indication is zero |

1. With reference to the full schematic for the Current Assembly, the R, $\overline{R_1}$ and $\overline{R_2}$ reset signals are generated for any of the following conditons:

   A. 100V to 1 kV or 1 kV to 100V range change: via differentiation of the 100V and $\overline{100V}$ signals at one of the IC 13 quad gate inputs, followed by passage through gates in IC's 2 and 3 to the outputs R, $\overline{R_1}$ and $\overline{R_2}$.

   B. Actuation of K7, the high-voltage ON relay, which means that either the Charge (+) or the (-) switch has been depressed: via K7 Aux signal (derived from the K7 driver via

differentiation), applied to the input to another of the IC 13 dual gates via inverting transistor Q11. Further transmission through gates in IC packages 15, 2 and 3 carry this signal to the R, and reset lines.

C. Additonal guarantee that Charge (+) or Charge (-) depression clears the display is afforded by or'ing the C+ and C- signals from the Control and High Voltage Board by one of the gates in IC package 5, inverting the result in a gate in IC package 15 and then after differentiation, applying the resulting pulse to the reset circuitry of IC's 15, 2 and 3 as for other signals.

D. Power ON generates a reset via resistor R64 and capacitor C33, driving the input to a gate in IC 3. When +5 is applied to this series RC combination to ground, the capacitor is initially discharged. This initial "low" signal, via gates in IC package 3, furnishes a reset signal to the counters and other circuitry whenever power is applied.

The $\overline{R1}$ reset signal is used to reset the Voltage counters; $\overline{R2}$ is used to reset the Current counters. R is inverted to become $\overline{R}$, and is used to reset other flip-flops in the measurement circuitry.

2. The Count allow signal, CA, is generated as a positive-going gate signal at the output of one of the dual-input gates in IC 4. It results from the coincidence of depression of the Pulse switch (signified by the $\overline{P}$ signal from Control and High Voltage), and either of the Charge signals. CA is used to enable generation of the output from the DC-to-Pulse-Width Converter, described in Section 3.5.3. Dual-input IC gates associated with the $\overline{P}$, $\overline{C+}$ and $\overline{C-}$ logic to obtain the CA signal are in IC packages 4 and 5 on the Current Board. Capacitors C28 and C29 are used for differentiation, to obtain the required CA gate rather than a step. CA gate termination inhibits repeated digistization of stored peak voltage even if the Pulse switch is repeatedly depressed while a Charge switch held down.

3. The Polarity signal is generated from the $\overline{C-}$ signal furnished by the Control and High Voltage Board. It is inverted by a gate in IC package 5, and drives level-translating transistor Q12. The POLARITY output signal from Q12, low or -15 volts for (+) polarity

and high or about +1.8 volts for (-) polarity, furnishes information for switching within the peak detectors as described in Section 3.5.2.

4. The P signal is used in both Voltage and Current DC-to-Pulse-Width Converters to hold their enable flip-flops reset until the Pulse switch is actuated. P is generated by simple inversion of $\overline{P}$ from the Control and High Voltage board, by a gate in IC package 4 on the Current Assembly.

5. The (+) signal to the digital displays is generated by a flip-flop which uses all four gates in IC package 6. This flip-flop jam-transfers polarity information contained in the $\overline{C+}$ and $\overline{C-}$ signals, on command from the same signal that drives the CA differentiator capacitors, C28 and C29. Jam-transfer is essentially coincident with actuation of the Pulse switch when a Charge switch is being held down. Polarity information is then stored by the flip-flop until the count is complete.

6. The K5A signal derives from a flip-flop using three of the four gates in IC package 7. The flop is triggered when the pulse relay K5 is actuated, and is reset by the $\overline{R}$ signal described under (1) above. K5A allows display of Go and No Go indications derived from the Voltage and Current counters and Go/No Go comparators.

7. ZA, or zero allow, permits display of the least-significant digit zero and decimal point, following actuation of pulse relay K5. The flip-flop that locks up for this purpose is contained in IC package 8, and is also reset by $\overline{R}$.

### 3.5.9 Go/No Go

The Go/No Go comparisons for both Voltage and Current are made by three IC's for each. One 4-bit comparator IC is used for each decimal digit. The chips are designated 9, 10 and 11 for most, next and least significant digits respectively. Each IC accepts BCD or binary-coded-decimal data from the appropriate Counter/Latch/Decoder/Driver. The reference input is BCD data from the corresponding front-panel digital limit switch. In addition, the "1" output from the fourth or over-rage counter is applied to the Go/No Go indicator circuitry, so that if over-range occurs, an appropriate Go or No Go indication will result.

## 3.6 Voltage Transducer and Range Switching: Circuit Ground

Fig. 3-15 shows the way in which the Voltage Transducer performs range switching and the origin of the Model 424 circuit ground.

The measured pulse starts at the Measure Hi and Measure Lo front-panel terminals. Measure Lo is defined as the reference point for circuit ground for the entire unit. Both Hi and Lo travel to the adjacent Voltage Transducer, a shielded enclosure used to select 100V or 1 kV nominal range. The Hi lead is applied to a precision 10K resistor for 1 kV range operation, as shown in the Figure. It is also connected to the normally-open contacts of a high-voltage relay used to shunt a 1.065K resistor across the 10K for 100V range operation. A 50-ohm termination to case -- which is circuit ground brought over from Measure Lo -- completes either a 200:1 or a 20:1 attenuator for the 1 kV or 100V range respectively.

The 100V range relay is actuated by transistor QV1 via pins J4-15 and J4-S on the Measurement Board on the Input Assembly. (The Input Assembly is the shielded case internally housing the Preamps, and externally mounting the Measurement Board, as well as the Voltage and Current Baluns). In turn, the base of QV1 is driven via pins 4 and D on the Measurement Assembly, from the front-panel push-button voltage range switch, P-S8, terminals 1 and 2. Application of +5 via this switch to the base of QV1 pulls in the 100V range relay.

The circuit ground connection is brought along with the attenuator output from the Voltage Transducer, via a coaxial Tee and coax cable, to the Voltage Balun also on the Input Assembly; and then to the input of the Voltage Preamps and Peak Detector within the shielded enclosure. The Input Assembly case continues the circuit ground connection, which also grounds the otherwise-"floating" metal card cage in which J1, J2, J3 and J4 are mounted (Control and High Voltage, Voltage Ass'y, Current Ass'y and Input Ass'y respectively).

Circuit ground finally travels on ordinary wire via a jumper from the Input Assembly case to pins 7 and H on the Measurement Board on the Input Assembly; from where it continues to the remainder of the unit's printed circuit boards including the internal + and - 15V and +5V regulated

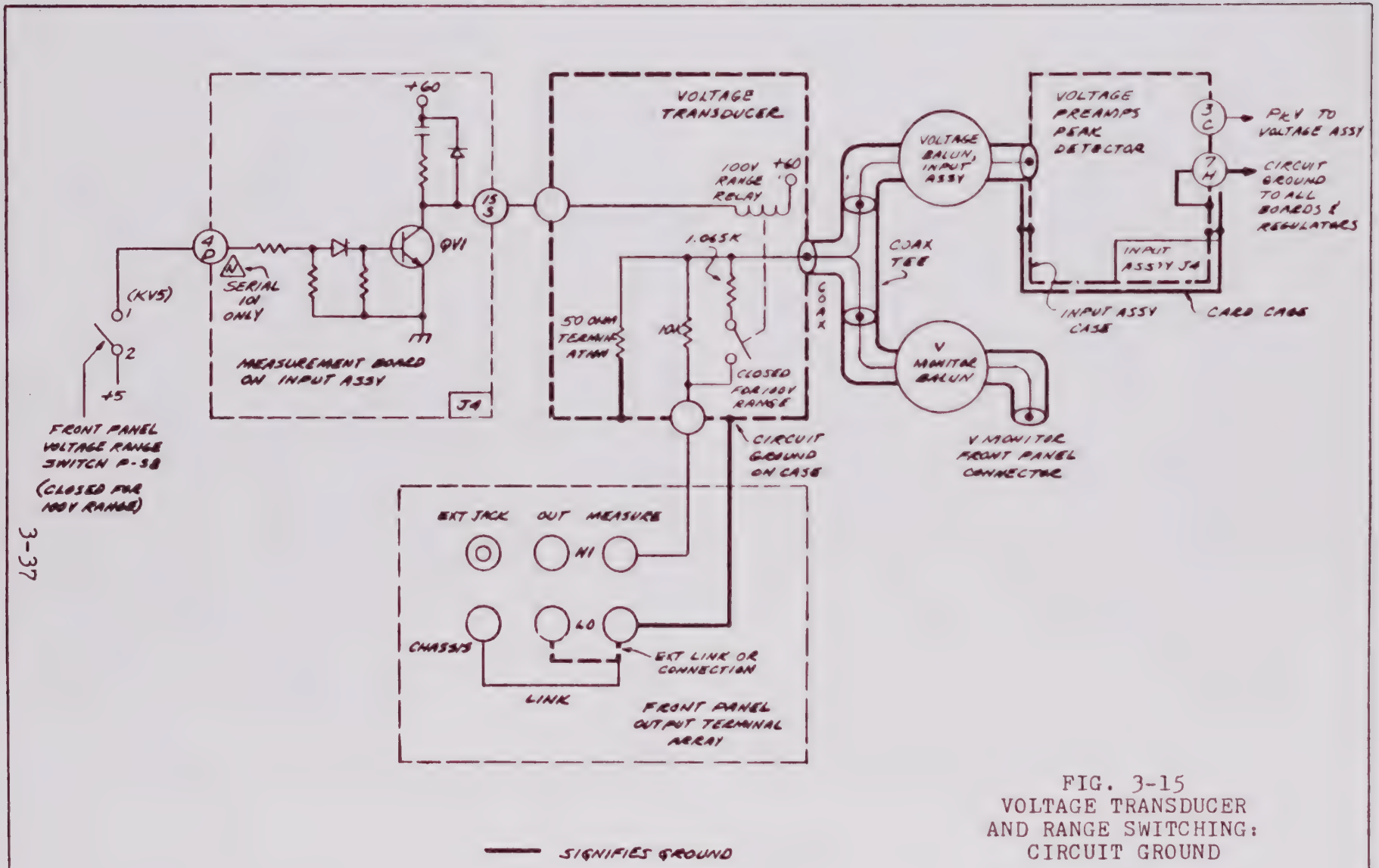


FIG. 3-15
VOLTAGE TRANSDUCER
AND RANGE SWITCHING:
CIRCUIT GROUND

supplies. Input Assembly voltage output, the result of peak detection, appears on pins 3 and C on the same Measurement Board J4, as shown.

The front panel V Monitor coax derives its signal, including the ground for its otherwise-isolated shell, from the same Tee that drives the Input Assembly Voltage Balun. Again, connection is made via a balun, designated the Voltage Monitor Balun.

## 3.7 Current Transducer and Range Switching

As shown in Fig. 3-16, the Model 424 Out Lo front panel jack is driven via a current transformer housed in the Current Transducer, mounted just at the rear of and behind the main card cage. Model 424 output current is transduced into a proportional voltage via an appropriate shunt on the current transformer secondary. R1 in parallel with R15 provide approximately 9 ohms for the purpose in 100A range. The 1 kA range relay shunts this further with eleven, 10 ohm resistors R4 through R14; for a total of about 0.9 ohms.

The 1 kA range relay within the Current Transducer is actuated by transistor QI1 via pins J4-16 and T on the Measurement Board on the Input Assembly. The base of QI1 is in turn driven from pins J3-20 and J3-X on the Current Assembly, supplied by inverter 17 on that board. Inverter 17 is supplied via J3-21 with the signal 1000A, (low for 1 kA range), from J5-20 in the Programmer Network. Programmers requiring the 1 kA range ground this pin to logic ground, J5-19, by means of internal jumper.

In the Current Transducer, resistors R2 (51.1 ohms) and R3 (470 ohms) in parallel, provide a series impedance for isolation and line matching the current transformer output. They drive a coaxial Tee, one side of which furnishes the input to the Current Preamp and Peak Detector within the Input Assembly, via the Input Assembly Current Balun as shown in the Figure. The circuit ground already on the Input Assembly case via the voltage circuits described in section 3.6, grounds the return of the coax back through the Current Balun to the otherwise-isolated case of the Current Transducer.

The other side of the coax Tee at the Current Transducer supplies the I Monitor front-panel coax, via the Cur-

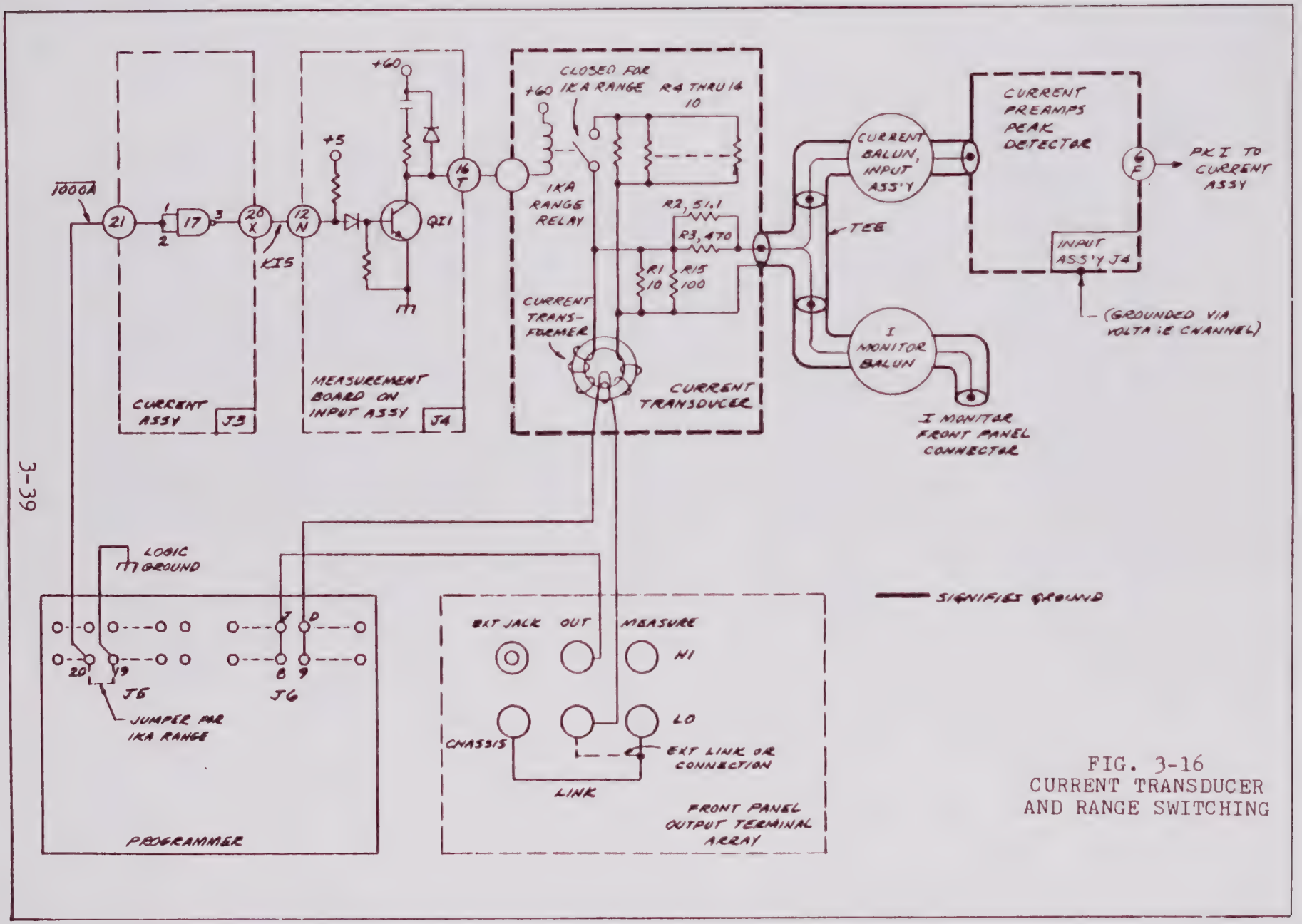


FIG. 3-16
CURRENT TRANSDUCER
AND RANGE SWITCHING

rent Monitor Balun as shown. The otherwise-isolated coax shell receives its ground from the Input Assembly case via coax cable and the Transducer Tee.

## 3.8 Programmable/Readout Option P

The Programmable/Readout Option P performs a number of tasks. Foremost full compatibility with the safety/interlock features of the Model 424; as well as enforced timing compatibility as well; even when the Surge Generator/Monitor is operating under the control of remote instrumentation.

Major built-in functions include:

### 3.8.1 Programming

1. Externally-programmable total Charge-followed-by-Pulse operation, based on application of a single actuating 1 msec to 1 sec duration pulse input (designated either PULSE (+) or PULSE (-)). This feature eliminates the need for separate Charge and Pulse input signals with appropriate timing requirements (see (2).

2. Automatic selection, via the Programmer Network in use, of an appropriate time delay between charging the internal storage and generation of the output pulse. This delay is set to be consistent with performance of the specific Programmer, in line with 6 pulses/minute for the basic unit.

   The delay is automatically increased to supply 2 pulses/minute when the Programmer in use required the Model 210 auxiliary Energy Storage Unit, and to 1 pulse per minute when the further additional storage of the Model 211 auxiliary Energy Storage Unit is employed, except 4 pulses/minute with PN 291.

3. Availability of independent Charge and Pulse operations to synchronize the Model 424 output pulse externally, by setting PULSE ALLOW high instead of low. Pulsing is inhibited until EXTERNAL PULSE is low, at which time if the internal delay has timed out (see 2 above), the Model 424 output pulse will be generated following an additional time delay of approximately 100 msec.

4. Availability of NET 1 and NET 2 auxiliary programming inputs. These can be used as configuration-control inputs for applicable Programmer Networks -- changing waveshape, peak voltage or peak current. (Note: NET 2 unavailable when the installation is furnished with the capability for auxiliary

energy storage via use of the Model 210 or 210/211 combination).

5. REMOTE CONTROL input command enables all other remote inputs, which are otherwise ineffective. It also de-activates the manual front panel Charge and Pulse switches, so that control can be exercised from only one place; and flashes the front panel High Voltage light continuously.

6. DATA VALID CONTROL allows selection of whether a voltage no go indication will inhibit a DATA VALID output flag.

7. PRINTER BUSY inhibits a new PULSE (+) or PULSE (-) signal.

3.8.2 Readouts

1. Peak clamped output voltage -- 3 BCD digits plus overrange digit: lXXX.

2. Sign of (1).

3. Decimal point for (1) -- for 100V range (XX.X), 10 kV range (X.XX).

4. DATA VALID signal -- indicating data is not over- or under-range, peak current is over pre-set limit, all interlocks are closed and so on.

5. PRINT COMMAND pulses, of both polarities, starting with the leading edge of DATA VALID.

6. CYCLE COMPLETE pulse, approximately 3 seconds after the Model 424 output surge. Can be used to enable the start of next pulse cycle by directly or'ing with PULSE (+) or PULSE (-) input for automatic, repetitive operation at maximum rate (externally). Maximum rate is about 6 ppm for standard-energy Programmer Networks, 2 ppm or 1 ppm for high-energy Programmer Networks as described under 3.8.1, (2).

3.8.3 Special Unit Checkout

If it is desired to perform the open-circuit resistance checks of section 4.3.1-2.B (as for Table 4-3), and >10M is desired even with Option P, for maintenance purposes only (not for routine checking) open connectors J15 and J16 (the latter very carefully). (See location drawing on page 8-9.)

SECTION 4

# 4. Maintenance

## 4.1 Purpose

This section describes performance tests, calibration Procedures and trouble shooting techniques for the KeyTek Model 424 Surge Generator/Monitor.

## 4.2 Test Equipment

Test equipment required to maintain the Model 424 is listed in Table 4-1. Equipment may be substituted based on the equivalence of performance specifications. Table 4-2 lists optional additional equipment that is extremely helpful but not absolutely required, in maintenance and use of the Model 424. If possible, these items should also be made available.

## 4.3 Performance Tests

Performance Tests may be used to verify instrument adherence to specifications either for periodic maintenance or for incoming inspection. The performance tests are conducted with a nominal line voltage of 115/230 volts ±10%, 50-60 Hz and at a temperature between 20° and 30°C, at a relative humidity not greater than 50%. Except for specific tilt tests, the unit should be level; except that the front may be elevated as much as an inch above the rear of the unit. A performance check list is provided at the end of this section. This check list may be copied and entries made on it to maintain a record of periodic inspection.

WARNING

The Model 424 is designed to test devices and circuits for protection against high-voltage, high-energy electrical surges. Such surges occur in field use of equipment, and result from natural phenomena such as lightning discharges and power-line disturbances. The only sure way to test for withstand and susceptibility protection against these phenomena is to simulate surge waveforms known to result from them.

The pulses involved necessarily include voltage peaks of over 6000 volts, current peaks to 2000 amperes and peak power levels to 750 kW. Stored energy in the basic Model 424 is 80 joules; with Models 210 and 211 auxiliary Energy Storage Units, 630 joules.

Surges at the above levels are potentially dangerous and even lethal. Hence, even though all reasonable design precautions have been taken via interlocks, dual-switch operation and so on, the instrument should be used only by or under direct supervision of qualified

TABLE 4-1

List of Equipment to Inspect and Calibrate
KeyTek Model 424 Surge Generator/Monitor

| Instrument Nomenclature | Specifications | Use | Manufacturer and Model Number |
|---|---|---|---|
| High-speed oscilloscope Storage type preferred, or surge scope if storage not available | Risetimes better than 5 nsec preferable, 10 nsec maximum. Writing speed 400 cm/usec minimum. | Measure waveshapes, peak amplitudes, rise and fall times | PREFERRED: Tektronix 7834, 7633 or 466 (all storage), WITH EMI OPTION. (7A18 vertical amplifier plug-in and 7B53 Time Base; offset plug-in Type 7A13 also highly desirable.) OR Tektronix Model 507 (surge scope): acceptable for the higher voltage work, but requires extensive photography. |
| High-voltage scope probe | 50:1 or 100:1 10 M input, minimum of 1000V peak | Measure high-voltage pulses | PREFERRED: HP 10002B, 50:1, 10 M, 1000V peak (10 ft) OR Tek P6009 Opt 4, 100:1, 10 M, 1500V peak (9 ft) |
| X1 scope probe | 1:1, 15-20 nsec risetime into 20 pf | Measure low voltage pulses and general trouble-shooting | PREFERRED: HP 10008B, 1:1, 600V peak (6 ft) OR Tek P6011, 1:1, 500V peak (6 ft) |
| Frequency counter | Accuracy of 0.1% at 125 kHz | Measure internal clock frequency | Fluke Model 1900A |

TABLE 4-1 (con't)

List of Equipment to Inspect and Calibrate
KeyTek Model 424 Surge Generator/Monitor

| Instrument Nomenclature | Specifications | Use | Manufacturer and Model Number |
|---|---|---|---|
| Multimeter | AC and DC Voltage, Current and Resistance; with AC and DC voltage ranges preferably to 5 kV. | Measure Voltage, Current, Resistance; particularly at higher voltages | Simpson Electric Co., Model 261-2 or equal. (Note that newer Simpson Model 260 only ranges to 1000V). |
| Digital Voltmeter/Ammeter | DC voltage, accuracy to 0.1% | Measure 10 volt reference voltage | Fluke Model 8000A or equal |
| Precision, 0-1000V dialable DC source | Absolute accuracy ±0.25% of reading or better | DC-calibrate oscilloscope probes, vertical amplifiers and oscilloscopes | Fluke Model 332<br>OR<br>Rotek Model 320 |
| Current Transformer | 1% absolute accuracy, 20 nsec max. rise-time, droop less than 0.5%/msec. IT ≥ 0.24 amp-sec | Measure and calibrate pulse currents | Pearson Model 110. Note: auxiliary resistive termination required for 10 x 1000 over 100A, and other long waves. Suggest use of 5.55 ohm auxiliary parallel termination, yielding 5 ohms for the total including the Pearson internal 50 ohms -- also changing the scale factor to 10 mV/A from 0.1 V/A.* |

* Without the auxiliary termination, peaks will be essentially correct, but the transformer will be unable to support the long pulse and waveshape distortion will result after a few hundred microseconds.

TABLE 4-1 (con't)

List of Equipment to Inspect and Calibrate
KeyTek Model 424 Surge Generator/Monitor

| Instrument Nomenclature | Specifications | Use | Manufacturer and Model Number |
|---|---|---|---|
| Output Termination* | Series 0.0011 mfd, 6 kV Ceramic capacitor in series with 27 ohm, 2w 5% carbon resistor* | Plugs into Model 424 output terminals to terminate internal coax. Must be used at all times, or equivalent, to obtain rated Model 424 performance.* | KeyTek Model 485 (no rear takeoff jacks) or Model 486 (includes rear takeoff jacks). NOTE: One of each is supplied with original equipment.* |
| Output Termination for use with Programmer Network PN 249* | Series .055 mfd capacitor (.022 in parallel with .033) Sprague type 715P; in series with 2.7 ohm, 2W 10% carbon resistor.* | Same as above, for PN 249. | KeyTek Model 487, with rear take-off jacks. NOTE: Supplied with PN 249. |

* Other Programmer Networks use still different Terminations. See Section 2.4.5 for complete listing by Programmer. Appropriate Terminations are supplied when each Programmer Network is shipped.

TABLE 4-1 (con't)

List of Equipment to Inspect and Calibrate
KeyTek Model 424 Surge Generator/Monitor

ADDITIONAL EQUIPMENT THAT IS HIGHLY
DESIRABLE BUT NOT MANDATORY

| Instrument Nomenclature | Specifications | Use | Manufacturer and Model Number |
|---|---|---|---|
| 7-Volt Surge Standard | 6.8V silicon avalanche device; rated at 140A for 10x1000. | Check Model 424 Monitor Surge calibration directly. (See section 4.4.2) | General Semiconductor Industries type 1.5KE6.8, surge-calibrated by user, independent lab or KeyTek Instrument Corp. (See section 4.4.8.) |
| 100-Volt Surge Standard | String of 5, 20-volt silicon avalanche devices; rated at 50A for 10x1000. | " | Same, except five, type 1.5KE20, surge-calibrated. |
| 800-Volt Surge Standard | String of 8, 100-volt silicon avalanche devices; rated at 10A for 10x1000. | " | Same, except eight, type 1.5KE100, surge-calibrated. |

TABLE 4-1 (con't)

List of Equipment to Inspect and Calibrate
KeyTek Model 424 Surge Generator/Monitor

ADDITIONAL EQUIPMENT THAT IS HIGHLY
DESIRABLE BUT NOT MANDATORY

| Instrument Nomenclature | Specifications | Use | Manufacturer and Model Number |
|---|---|---|---|
| Gas-Tube Surge Standard | Repeatability, with standard deviation less than 50V over long periods of time at 10 kV/usec. Hierarchy of units preferred (see section 4.4.6) Make sure there is negligible "first-time effect" or else disregard the first few readings each time they are used. Check for light sensitivity. | Check Model 424 Monitor high-speed surge calibration directly. (See section 4.4.2.) | Any tubes that meet the requirements of the "Specifications" column. |

TABLE 4-2

List of Optional Additional Equipment to Use, Inspect and Calibrate KeyTek Model 424 Surge Generator/Monitor

| Instrument Nomenclature | Specifications | Use | Manufacturer and Model Number |
|---|---|---|---|
| X1, RG55B/U cable, with built-in coaxer | High-loss ferrite toroid, on about ten turns of double-braid coax; BNC connectors (plugs) both ends | Voltage or Current Monitor output examination from the Model 424, to secure minimum RFI or "splash" | KeyTek Model 482 cable assembly; OR RG55B/U wound, ten to twelve turns, around a Ferroxcube Type 400T750/3C8 core at the end of the cable; with approx. 5 feet of free cable on the other end, and both ends terminated with a BNC cable plug |
| Coaxer cores for scope probes | High-loss ferrite, and/or 1- or 2- mil tape permalloy or supermalloy; toroids | Suggest several, one for each of the scope probes commonly used to examine high-speed RF pulses. Reduces RFI, or "splash", on display. | Ferroxcube 400T750/3C8 ferrite toroid AND/OR Magnetics, Inc. toroid 52001-2F (supermalloy) or 52001-2R (permalloy) |
| Power resistors | 50w, 0.01 ohm, 2% tolerance | Verify ratio of Model 424 voltage-to-current digital readouts | Dale RH-50, 2%, 50w, 0.01 ohm |

TABLE 4-2 (con't)

List of Optional Additional Equipment to Use, Inspect and Calibrate KeyTek Model 424 Surge Generator/Monitor

| Instrument Nomenclature | Specifications | Use | Manufacturer and Model Number |
|---|---|---|---|
| Power resistors | Non-inductive, 250w; values of 0.1, 1, 10 ohms, all ±1% | Verify ratio of Model 424 voltage-to-current digital read-outs | Dale NH250, 1%, 250w: 0.1 ohm, 1 ohm, 10 ohm values (other values optional) |
| Dual banana plugs | Color-coding can be a convenience | For short-circuit tests, tests with 'reference' protectors | Pomona type MDP: mix of 4 to 6 each in several colors. (Available in standard 10 color code). |
| Telephone jack | Three-connection, with dead-circuit ring ahead of actual ring connection. Gold-flashed. | For external interlock connection to Model 424 External Jack, and/or interlock test | Switchcraft Type 482. Do not use Switchcraft Type 267. |

personnel, and only after thorough understanding, via this manual, of the recommended connection and methods of operation. Specific emphasis should be placed on Section 2, Operating Instructions.

In isolated situations, components being surged may fragment if they are improperly manufactured, or are mis-applied for the surge energies involved. For this reason, components and circuits being surge-tested should be covered to prevent personnel hazard.

4.3.1 Front Panel Controls, Displays, Terminals

Note

The resistance and indicator tests in the following items (1) through (9), apply to a complete Model 424: i.e., all of the printed circuit and other Model 424 sub-assemblies are in place. During trouble-shooting it is sometimes desirable to make similar measurements with one or more of the sub-assemblies removed. Under such changed conditions, resistance results and indicator conditions may be quite different from those that apply to the complete unit. Consult Section 4.5, Trouble-Shooting, for correct resistance values and indicator conditions for these alternate situations.

1. Prior to turning power on:

   A. Remove the termination, if any, on the Output or Measure terminals; and remove all external connections to those terminals including the KeyTek Model 480 Adapter and the KeyTek Model 450 Test Fixture, if either is in use.

   B. Remove the links, if any, connecting any of the five front panel terminals: Out Hi, Out Lo, Measure Hi, Measure Lo, Chassis Ground.

   C. If a telephone plug has been inserted into the front panel External Jack, remove it as well.

   D. Remove any external connections to the Voltage Monitor and Current Monitor output coax connectors.

   E. Disconnect the ac line cord from the power receptacle, but leave it connected to the Model 424.

   F. Plug in a Programmer Network.

2. Using an ohmmeter, make the following measurements:

   A. Verify that the resistance between the front panel Chassis Ground terminal and the third or ground wire on the male or plug end of the ac line cord is less than 0.1 ohm. Use both polarities for the ohmmeter.

   B. Measure the resistance with each available Programmer, between the Chassis Ground terminal and each of the following: Out Hi, Out Lo, Measure Hi, Measure Lo, and the shells of the Voltage and Current Monitor coax connectors. All readings should be taken with both polarities of the ohmmeter, and all readings should be in excess of 10 Megohms. (For a unit with Option P, readings will be less than 0.2 ohm.+)

3. Deleted

4. Connect a shorting link between Chassis Ground and Measure Lo. This link should be left in place for all future tests, and for all usage of the Model 424, unless this connection is proveded elsewhere. Tightness of both terminal posts should be checked periodically.

5. Connect shorting links or connections between the terminal pair Out Hi and Measure Hi, and between the terminal pair Out Lo and Measure Lo.

6. Plug the ac line cord into a three-wire receptacle so that the third wire is connected to house or water-pipe ground. If such a receptacle is not available, then run a separate ground wire to the Model 424

*Essentially one diode drop
+See Section 3.8.3

case or to the third wire on the ac input plug.

7. Select a Programmer Network and plug it in.

8. Rotate the Set Voltage knob fully counter clockwise. Turn power on. Do not depress either Charge switch or the Pulse switch. The following lights should light, regardless of the position of any control:

   A. Power on light (behind the power switch itself) -- red

   B. Charge Ready light -- green

   The following lights should not be lit, regardless of the position of any control:

   C. Tilt/Power Interlock

   D. Circuit Interlock

   E. Pulse Ready (on Programmer Network)

   F. Voltage Go and No Go

   G. Current Go and No Go

   H. High Voltage

9. Voltage Monitor, Current Monitor, Voltage Limit switch decimal point and Over/Under Range lights should be on or off as follows:

   A. If the 100V range push-button is depressed, the amber 20V/V light should be illuminated and the 200V/V light should be off. The Voltage Limit switch decimal point light should be on. Push the 1 kV range push-button; the two range lights should reverse conditons -- the 20V/V light should go out, and the amber 200V/V light should become lit. The Voltage Limit switch decimal point light should go out. The Over/Under Range light should be out in both 100V and 1 kV range positions.

   B. Push either the 100V or the 1 kV range button only part way in, so that when released, both of the range push-buttons are in the released, or out position. The Over/Under Range light should be lit (red), and neither of the two range lights (20V/V or 200V/V) nor the decimal point light should be on.

C. Depending on which Programmer Network is in use, and in some cases which position on the Programmer Network push-button switch has been selected, either the amber 20A/V or 200A/V Current Monitor scale factor light will be lit. For all full-range short-circuit currents up to 150A, the 20A/V range light should be on. For full-range currents greater than 150A, the 200A/V light should be on. Use all available Programmers and current selections to verify Current Monitor range light performance.

4.3.2 Interlock Tests

1. Tilt/Power Interlock

Elevate the front of the Model 424 until the Tilt/Power Interlock light turns on. This should occur when the front is about three inches above the rear of the unit. Lower the unit slowly; the Tilt/Power Interlock light should extinguish before the front of the unit reaches a point at about 1-1/2 inches above the rear of the unit.

Repeat the Tilt test, except raise the rear of the unit with respect to the front. Then repeat twice more, once for the left side elevated and once for the right side.

Whenever the Tilt/Power Interlock is on, verify that all other lights on the front panel are off except for the light in the Power On-Off switch.

Return the unit to its normal, level position; except that the unit may be operated with the front elevated up to an inch higher than the rear of the unit. Remove a Programmer Network plug-in. The Tilt-Power Interlock light should come on, and once again, all other front panel lights extinguish except for the light in the Power On-Off switch.

2. Circuit Interlocks

Remove the link between Out Lo and Measure Lo, and the link between Out Hi and Measure Hi. The Circuit Interlock light should go on, and the Charge Ready light should go off. Re-install the links just removed.

If a rear high-voltage connector is provided for use with an auxiliary, Model 210 Energy Storage Unit, (item 2 in Fig. 2-3), remove the cable or the "keeper" plug connected to it. The Circuit Interlock light should go on. Replace the cable or the "keeper" plug.

Insert a telephone plug, preferably Switchcraft Type 482 (or Type 267), into the External Jack provided for the purpose. (For actual interlock purposes, only the 482 is acceptable.) With no connections to any

of the terminals on the plug, the Circuit Interlock indicator should light and the Charge Ready light should go out. Connect the ring (center) terminal on the telephone plug to Out Lo. The two lights should reverse condition. Remove the telephone plug following this test, unless it (or another) is to be used in conjunction with an interlock switch in an external test fixture or chamber.

4.3.3 Charge (+) and Charge (-) Operation

Note

In tests that follow, voltages as high as 2000 volts may be stored internally in the Model 424, even though the analog meter may read only up to 1500. In any event, high-voltage incipient or actual breakdown is often preceded or accompanied by snapping or crackling sounds. These are always present, for example, in the event of a poor high voltage connection. A loose terminal, for instance, connecting Out Hi and Measure Hi, will result in a 'snap' when the ouput pulse is generated. Thus, in sections that follow, when high voltages are being charged or pulsed, attention should be paid to sounds that may indicate connection or breakdown problems. HOWEVER, these should NOT be confused with the rather heavy and duller sounds of the high-power, high-voltage Model 424 internal relays that are actuated during Charge and Pulse operations.

For the Charge and Pulse operational tests, it is slightly preferable to use a 1500V plug-in, not of the rate-of-rise type. Preferred types include the PN 241, 243, 247 and 248. If they are not available, the next choice is a 1000V, non rate-of-rise plug-in such as the PN 242 or the PN 244. Of course, rate-of-rise plug-ins are perfectly satisfactory for the tests, but they allow somewhat less precision in obtaining initial peak voltage data correspondence between the open-circuit volts analog meter and the digital voltage readout. If they are the only available Programmers, they should by all means be used without hesitation, and will provide quite satisfactory albeit less numeric results for this particular test.

Verify that the Set Voltage knob is still in the full counter-clockwise position, as set in Section 4.3.1, step (8).

Turn Power on. The Charge Ready light should light. Use the left hand to depress and hold down the Charge (+) switch. The Charge Ready light should extinguish, and the High Voltage light becomes lit as a warning that an output pulse may follow. In two to three seconds the Pulse Ready light, previously out, should light. Continuing to hold down the Charge (+) switch

with the left hand, use the right hand to slowly rotate the Set Voltage knob in a clockwise direction. The Peak Open Circuit Voltage meter should indicate a rising stored potential. Continue to elevate the stored potential until it reaches 500 volts. Then release the Charge (+) switch, and the meter indication should drop to zero in one to two tenths of a second. Return the Set Voltage knob to its full counter-clockwise position.

Repeat the above test using the Charge (-) switch.

Repeat both tests, using first the Charge (+) and then the Charge (-) but taking the voltage to the full 1500V (or 1000V if no 1500V plug-in is available.) Return the Set Voltage Knob to full counter-clockwise position before the start of each test.

Repeat the Charge (+) test, again raising the voltage only to about 500V. Then with the Charge (+) switch continuing to be held down, depress the Charge (-) switch as well. There should be no change whatever in any light indications, the meter indication or any other instrument characteristics. There should be no internal sounds of relays being actuated, since the Charge (-) switch is totally dead, electrically, for this sequence of operations. Presuming this test successful, repeat but this time raise the voltage as read on the meter to over 1500V -- in effect as far as the Set Voltage knob will rotate even if the meter goes off scale -- before also depressing the Charge (-) switch. Then set the voltage to 1500V. Next, while continuing to depress the Charge (+) switch, rapidly reduce the Set Voltage knob to zero (full counter-clockwise). The meter should require not more than about eight seconds to reach 200V on its way down, and of course should finally reach zero.

Repeat the Charge (-) switch test, again reaching only 500V. Now with the Charge (-) switch continuing to be held down, simultaneously depress the Charge (+) switch. The Meter indication should drop immediately to zero, and then charge up again as the dominating Charge (+) switch commands the internal relays, in proper sequence, to discharge and then recharge the energy-storage capacitors with the correct polarity voltage. Presuming this test successful, repeat but this time raise the voltage as read on the meter to over 1500V -- in effect as far as the Set Voltage knob will rotate even if the meter goes off scale -- before then depressing the Charge (+) switch. Continuing to hold down the Charge (-) switch, repeat the actuation and release of the Charge (+) switch several times, leaving the Set Voltage knob set at full clockwise. The meter should return to zero and then re-charge with each actuation of the Charge (+) switch, with the Charge (-) switch continuing to be held down. Now release the Charge (+) switch and allow the meter reading to build up to beyond full scale; then set the voltage to 1500V. Rapidly reduce the Set Voltage knob to zero (fully counter-clockwise). The meter should require not more than about eight seconds to

reach 200V on its way down, and of course, should finally reach zero.

4.3.4 Pulse Operation

Select the 1 kV range, and push both Voltage and Current digital display push-buttons. Install a termination (KeyTek Model 485 or Model 486) across the Out Hi-Out Lo terminal pair.

Depress and hold down the Charge (+) switch with the left hand; set open-circuit voltage to 500V. The High Voltage light should be on. The Pulse Ready light should become lit about three seconds after actuation of the Charge switch. Not less than several seconds after the last Set Voltage adjustment, and while continuing to hold down the Charge (+) switch, simultaneously depress the Pulse switch. The Pulse Ready and High Voltage lights should extinguish, and along with the Charge Ready light, remain out as long as both switches remain depressed. Approximately a second after depression of the Pulse switch, both switches may be released. Approximately two seconds after their release, the Charge Ready light should become relit. Both High Voltage and Pulse Ready lights should remain off.

4.3.5 Open-Circuit Voltage Tests

At this time the digital peak voltmeter should read the peak volts delivered to the (open-circuit) load. This should correspond very nearly with the 500V set on the peak open circuit voltmeter during the Charge operation, except for rate-of-rise waves -- as with the PN 241 in 1 kV/usec mode or the PN 245 or PN 246 in any mode. (Results with these waves will be 15 to 30% higher than the analog setting.) Thus, for non rate-of-rise waves the peak meter should read +500V, $\pm$ 5%. The tolerance is due primarily to the inaccuracy of the analog meter used to set the open circuit voltage for the test. If the reading outside the 475-525 volt range, repeat the Charge (+) and Pulse operations, but this time don't change the position of the Set Voltage knob; simply note the analog meter reading prior to actuating the Pulse switch. Sometimes the Pulse switch has been actuated too soon after completion of a Set Voltage knob adjustment. The built-in time delay from Charge to Pulse guarantees full charge of the internal capacitor only if the Set Voltage knob is not moved in a direction to decrease voltage. If it is, enough time must be given the capacitor to fully settle to its final value. This can be accomplished either by 1) waiting a few seconds if the change in Set Voltage has been small, or 2) by releasing the Charge Switch and reactuating it. Releasing it will fully and rapidly discharge the storage capacitor, reactuating will set in motion the accurate, guaranteed internal delay if Set Voltage isn't then readjusted. The "touching up" of the "Set Voltage" knob can be repeated several times in this way, to reach the desired open-circuit voltage.

For this particular test, what is important is correspondence between open-circuit meter reading on the analog meter, and digital meter reading after the pulse, for non rate-of-rise waves. If the two readings agree within 25V at about the 500V level, the test has been passed successfully.

If a Programmer with rate-of-rise wave was used for the Pulse operation test, than the voltage read on the digital peak readout should be between from 15 and 30% higher than the setting on the open-circuit analog meter, due to the built-in overshoot necessary with these waves. (See section 3.4.1, Programmer Networks.)

Repeat the above test for Charge (-) and Pulse, obtaining the same result except for the sign preceding the digital voltage display.

Now set the open-circuit voltage to full nominal value for all but rate-of-rise Programmers and Programmer switch positions. For these, set to 2/3 of full nominal value. Actuate Charge and Pulse for both polarities, and for the non rate-of-rise waves the digital readings should correspond. For rate-of-rise waves, the actual peak output voltage will be 15 to 40% greater than nominal setting.

### 4.3.6 Open-Circuit Current Tests

For both (+) and (-) tests above, whether at 500 or 1500V, the current digital display should be essentially zero -- different from zero only if a high rate-of-rise setting like 10 kV/usec is used, in view of the capacitive termination. At most, a few tens of amperes should be the reading even under these extreme conditions.

### 4.3.7 Over/Under Range Tests

Over-range on the 100V range

Set the Voltage Range push-button switch to the 100V range, and perform a Charge and Pulse test for both Charge (+) and Charge (-), with the open-circuit voltage equal to about 200V. The resulting digital voltage display should be blank, and the Over/Under Range light should be blinking at about a one-second rate.

Repeat the Charge and Pulse operation, reducing the Set Voltage gradually with each pulse, to determine the level below which the display will once again occur and the Over/Under Range indicator not light. This is de-

signed to change over at 139.9V. Experimental verification to ± 5 volts or so is adequate, since it is consistent with design of setting resolution of the Set Voltage knob. Thus, if a digital display occurs below 135 and blanks somewhat above, the unit meets the requirement satisfactorily.

2. Over-Range on the 1 kV Range
If a 1500V maximum wave of any type is being used, repeat the Charge (+) and Charge (-) followed by Pulse tests, except position the Set Voltage knob fully clockwise, so that the analog meter reads off scale. This should establish an open circuit voltage greater than 1599V, so that display blanking coupled with Over/Under Range light blinking can be checked in this way.

If no rate-of-rise waves are available, and no 1500V peak waves either -- that is, only a PN 242 or a PN 244 is available -- then the over-1599 volt operation cannot be checked, but then neither is it of significance in unit operation.

3. Under-Range on the 1 kV Range
Position the Set Voltage knob fully counter-clockwise, or essentially to zero. With the Model 424 in 1 kV range, generate an output Pulse in the same way as before, once for (+) and once for (-). The digital voltage display should read at or close to zero, limited by the end-turns or zero-setting resolution on the Set Voltage control. Actual reading is of no importance, so long as it is below 40V which is the Under-Range crossover point on the 1 kV range. The display should be blinking alternately with the Over/Under Range light. Raise the voltage slowly for successive Pulses, until a distinction at around the 40V level can be observed ± 5V is adequate discrimination for this test.

### 4.3.8 Short-Circuit Voltage and Current Tests

Short-circuit tests allow checking two features of Model 424 performance: First, it is important that the voltage display read zero for a true short-circuit across the Measure terminals, even when currents to 500A are flowing into a load. Second, short-circuit current tests provide means for verifying short-circuit current performance versus ratings for the Programmer Networks.

In view of the high peak currents involved, even a one or two-inch length of wire can cause a significant voltage drop as described in Section 2.4.3, Output Connections. For this reason, to establish true short-circuit conditions the connection set-up of Fig. 4-1 should be used. It is convenient for the purpose to take advantage of auxiliary dual banana plugs if they are avail-

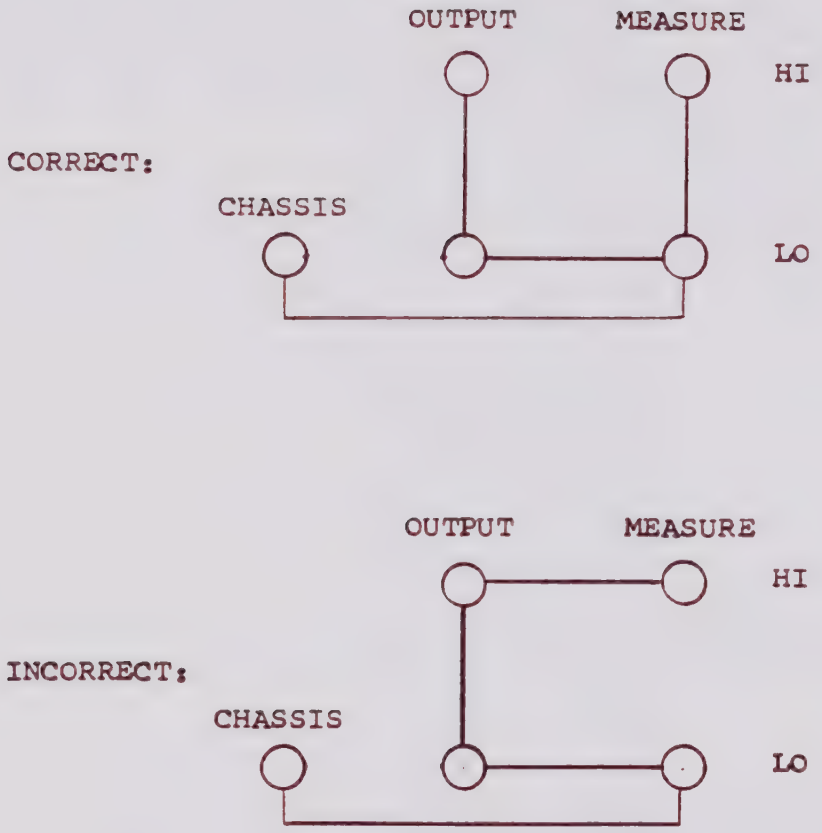


FIG. 4-1
OUTPUT SHORT-CIRCUIT CONNECTIONS

The connection method labelled "Incorrect" allows the Model 424 Measure input to "see" the drop across the lead connecting Out Hi and Out Lo. At 500A, even 2" of #20 wire can represent on the order of a volt.

The voltage drop implied by the "Incorrect" connection method would have negligible effect on the measured current so long as open circuit voltage is set to some hundreds of volts or more, which it of course will be for maximum short-circuit current testing.

However, use of the so-called "Correct" connections is required if the Model 424 peak voltage measuring circuitry is to read zero for short-circuit output conditions.

able, so that the 'short' may be applied and removed without difficulty. If such dual banana plugs aren't available, the connections may be made directly to the Model 424 Output and Measure terminals.

First, remove the link between Out Hi and Measure Hi. Be sure to leave connected the link between Measure Lo and Chassis Ground, and also leave the link between Out Lo and Measure Lo.

Then as in Fig. 4-1, connect a shorting link or wire from Out Hi to Out Lo. Then do not bridge between Out Hi and Measure Hi as shown in the portion of the figure labelled "Incorrect". This would allow the Measure input circuitry to measure the voltage drop across the wire connecting Out Hi to Out Lo, and that may be many volts at a peak current of 500A. Instead, as in the portion of the figures labelled "Correct", connect a shorting link between Measure Hi and Measure Lo.

Using maximum rated voltage for every Programmer available, and using the maximum current settings, generate output pulses into the shorting configuration just described. On the 1 kV range, the peak digital voltmeter reading will be close to zero and the Over/Under Range light blinks, alternate with the display. In 100V Range the reading should be close to .0, verifying correct performance of the low-level measuring circuitry within the Model 424. (See Table 4-3.)

Current readings on the peak digital current display should correspond with rated short-circuit currents for each Programmer and Programmer selector-switch setting, within ±7% to ±10% ±1 digit. The tolerance stems from uncertainty in the analog voltage meter setting which must be set to full rated voltage for these tests, plus resistor uncertainties and uncertainties in the basic peak current calibration equipment that is generally available. Agreement between rated and measured currents is typically two to three times better than the 10% outside figure, ranging from 3 to 5%.

Note that the 10% specification is only on the correspondence between Programmer rated short-circuit current and peak measured current. Accuracy of the peak measured current itself is unaffected by the nominal short-circuit current pulsed by the Programmer Networks, and is typically twice as accurate as the correspondence itself -- See Specifications in Section 1.4.2.

4.3.9 Peak Voltage Accuracy

First, adjust the high-frequency performance of the high-voltage scope probe to be used, following the scope manufacturer's recommended procedure. It typically involves using the probe to examine a square wave made available at the scope front panel as shown in Fig. 4-2. Adjustment is then made of the compensating

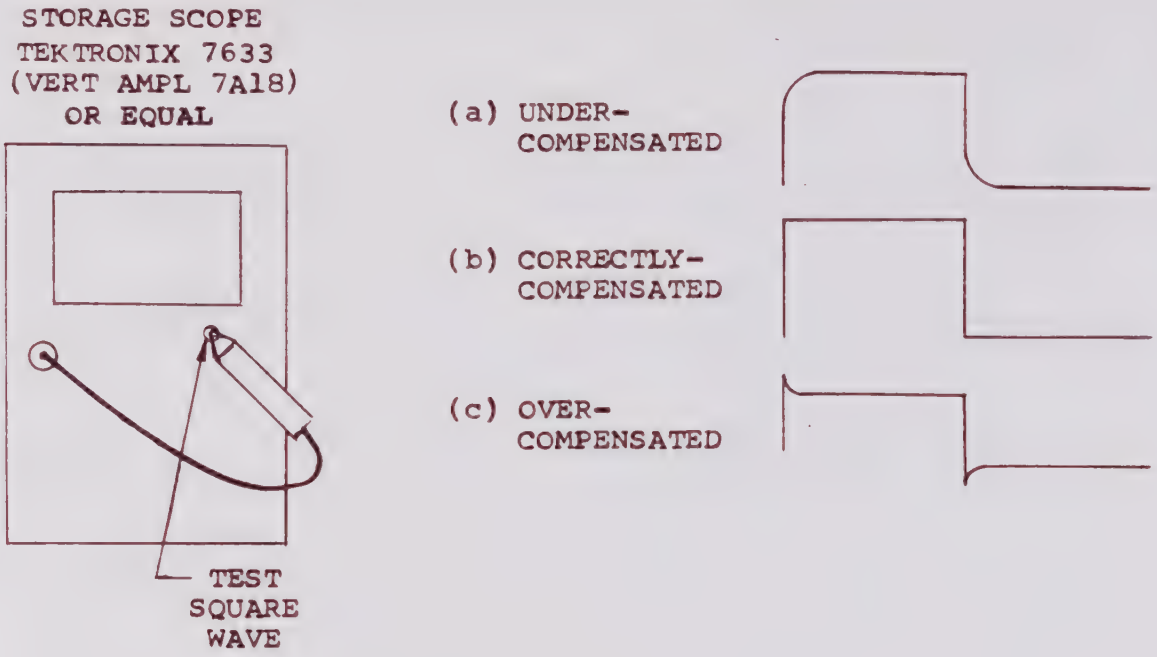


FIG. 4-2
COMPENSATING THE OSCILLOSCOPE PROBE

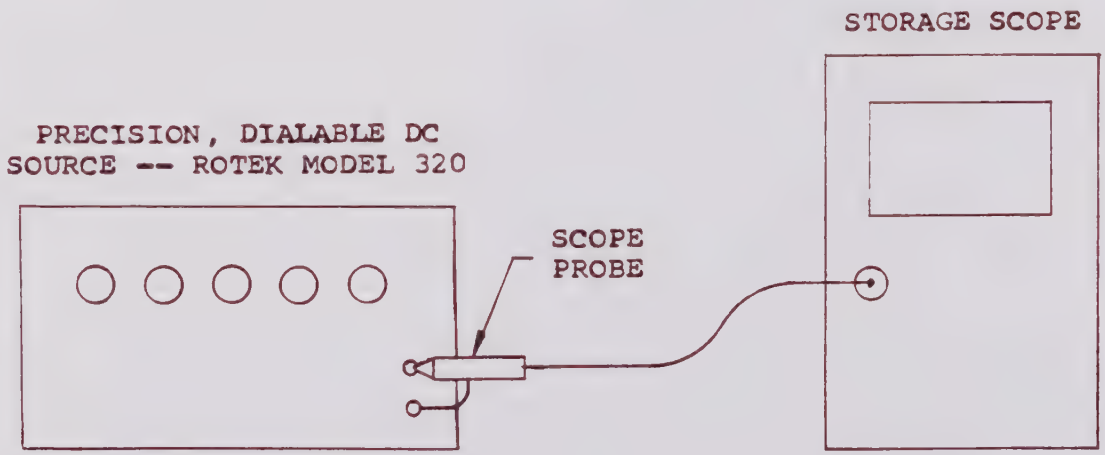


FIG. 4-3
DC-CALIBRATING THE SCOPE/INPUT
AMPLIFIER/PROBE COMBINATION

capacitor in the probe. The object is to obtain the optimum waveshape -- square, as in Fig. 4-2 (b), with no overshoot as in Fig. 4-2 (c), and without a delayed rise as in Fig. 4-2 (a). For accurate pulse measurements using an oscilloscope, careful adjustment of this probe compensation is critically important. Equally important is locking the adjustment once it has been made. With some probes, this locking and adjusting is done at the probe barrel, and often locking tends to move the adjustment. It is worth while to make the adjustment as many times as necessary to master getting it correct and locked simultaneously. (This pulse adjustment isn't necessary or even available with the 1:1 lower voltage probes, of course, which are also used in measuring Model 424 peak voltage accuracy.)

Next, it is important to calibrate the probe, the scope vertical amplifier and the scope itself in combination at DC, to eliminate errors in probe/imput impedance match, vertical attenuator resistors and finally, vertical amplifier-to-screen calibration factor. In effect, by DC-calibrating the entire scope from probe input to measured screen displacement, major sources of uncertainty can be eliminated. Remaining uncertainties will be scope readability and/or resolution, and high frequency versus DC-calibrated performance. These effects can be kept small enough and/or compensating calculations made, to allow fast pulse amplitude measurements with an accuracy of several percent using the right scope, probe, and techniques.

As shown in Fig. 4-3, scope DC-calibration is carried out by connecting the probe to be calibrated to the output from a dialable, precision DC voltage source with absolute voltage accuracy preferably better than $\pm$ 0.25% of reading from about 10V through 1000V. Both the attenuating probe and the 1:1 probe will have to be calibrated, since their performance will of necessity be different. After careful scope zeroing on each range being used, oscilloscope full- and half-screen displacements should be displayed by dialing the DC on every scope range and with every probe to be used, after a several-hour warm-up of both DC source and scope. The DC voltages that generate the half- and full-screen displacements should be recorded. They can then be used to determine corrections throughout the calibration procedure for voltage accuracy.

Peak voltage accuracy tests can be conducted in one of two basic ways: open circuit, or with a protector load on the Model 424. When open-circuit tests are conducted as in Fig. 4-4, since no significant currents are flowing, Out Hi-Measure Hi and Out Lo-Measure Lo links can be installed locally at the Model 424 as shown. The measuring oscilloscope probe is then connected to either Measure Hi and Lo, or Out Hi and Lo, for scope measurement of the peak voltage simultaneous with measurement by the peak detector within the Model 424. While it

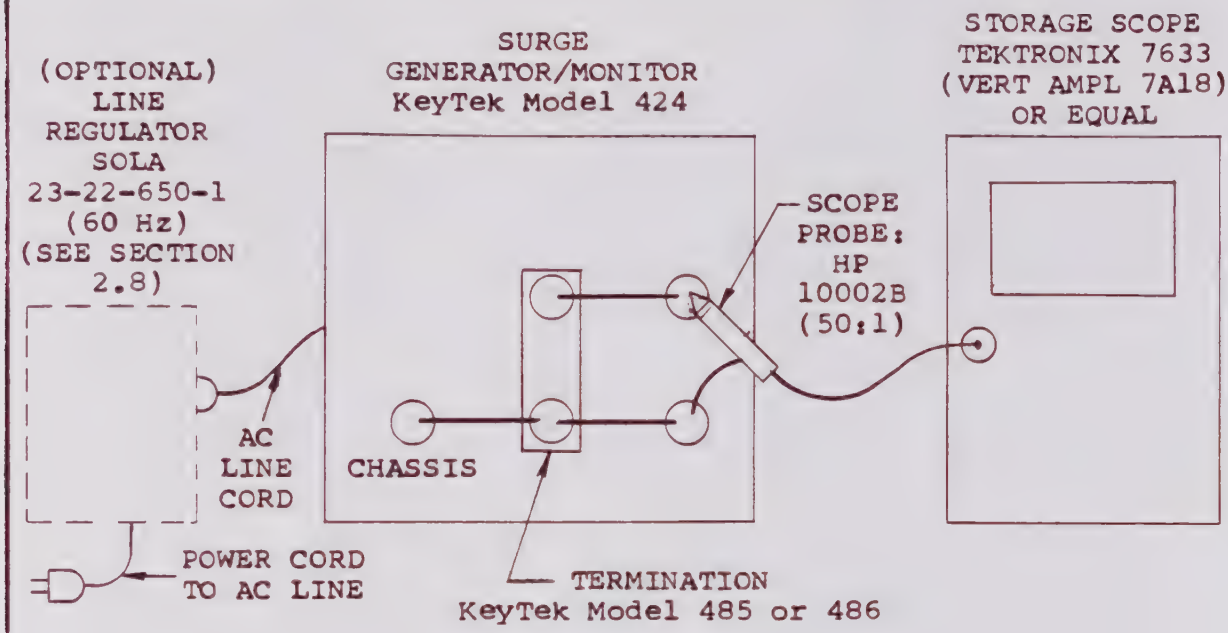


FIG. 4-4
PEAK VOLTAGE ACCURACY TEST,
OPEN CIRCUIT

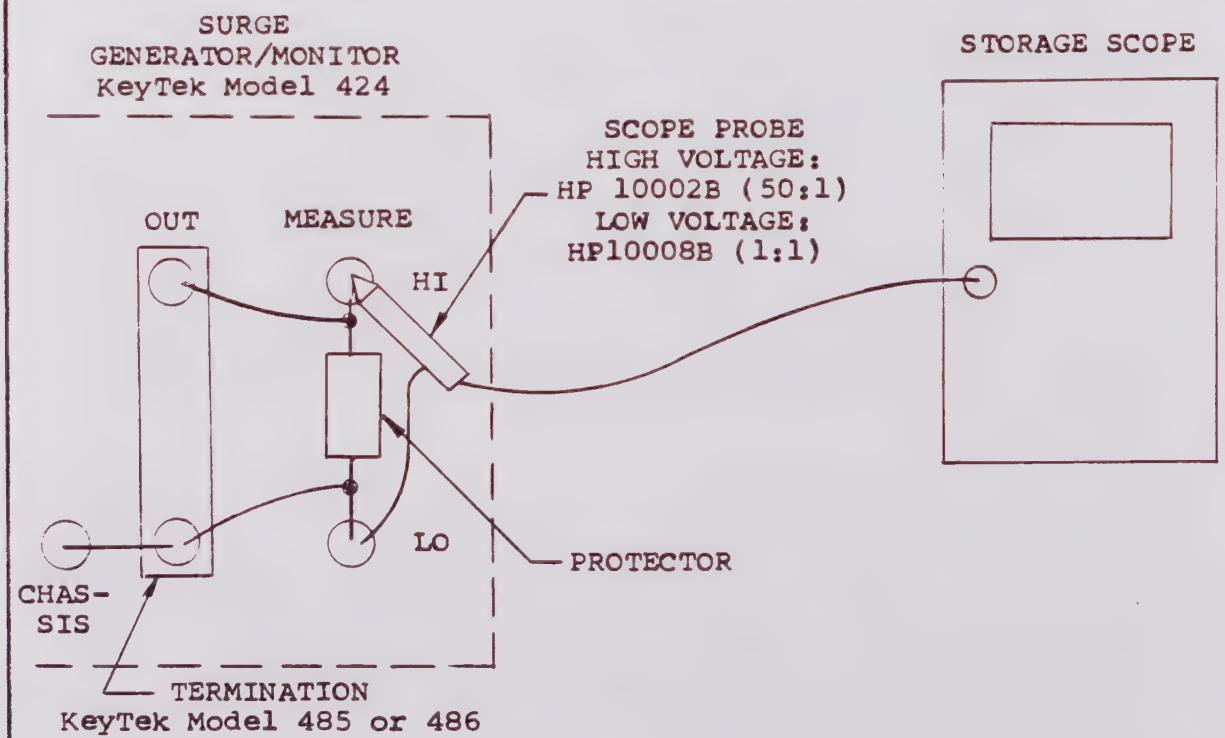


FIG. 4-5
PEAK VOLTAGE ACCURACY TEST,
PROTECTOR LOAD

is not necessary to employ a line regulator with the Model 424, if exactly repeatable open-circuit pulse heights are desired for repeat readings, it may be desirable to employ one for this type of test, as shown in the Figure. See Section 2.8 for further details.

Another, preferable peak voltage test is shown in the setup of Fig. 4-5. A protector is wired directly across the Measure terminals. An auxiliary, dual banana plug can be convenient for the purpose. The Model 424 Output terminals are connected directly to the protector leads as shown, and the scope probe high and low connected to Measure Hi and Measure Lo respectively. In this way, current drawn by the protector isn't included in the measurement circuit of either the Model 424 or the scope, and most important, both the Model 424 Measure terminals and the scope are measuring the same potential.

In the case of the Peak Voltage test method of Fig. 4-5, as in most applications for the Model 424, no line regulator need be used since the protector essentially 'regulates' the peak voltage to be measured well enough to provide repeatability. The method of Fig. 4-5 is much to be preferred over that of Fig. 4-4 particularly for voltages from five to several hundred volts. The Set Voltage control on the Model 424 is not designed to provide high resolution in the low voltage range, since it is unnecessary in actual operation.

Whichever test circuit is used, tests should generally be conducted near 7 and 100V on the 100V range; and similarly, at or near 100 and 1000V on the 1 kV range. It is particularly important that gas tubes be used in the circuit of Fig. 4-5, since measurement of the peak of a chopped impulse wave is one of the more difficult accomplishments for both peak detectors and oscilloscopes. Oscilloscope corrections are necessary as a function of rise time for chopped impulses at faster rate-of-rise. At 10kV/usec, a scope like the Tektronix 7633 with 7A18 plug-in, having a 5 nsec risetime, will read low by 21V. The traditional Tektronix 507 surge scope with its 10 nsec risetime, will read 45V low on the same wave, as the error is directly proportional to scope risetime for chopped impulse waves. For waves of lower rates-of-rise, errors are proportionately lower: thus only 10V for the Tek 7633 and 22V for the Tek 507 at 5 kV/usec, etc.

Test fixtures like the KeyTek Model 450 or others are often used for Production or QC work. Fixed corrections for any errors inherent in their wiring configurations can be readily determined. First, make the measurements on a protector of the type to be tested in accordance with Fig. 4-5, and then in the Fixture. Even if the protector's performance is statistical -- that is, different for each firing -- the difference between Model 424 reading and scope reading for the two test methods will indicate the required correction.

### 4.3.10 Peak Current Accuracy

The method recommended for checking peak current measurement for the Model 424 is to employ an external shielded pulse transformer, for cross-calibration. The Pearson Type 110 is an excellent choice. It provides 0.1V per ampere. *

Current-viewing resistors, or resistors specifically designed for pulse-current use, can also be used; but since they don't isolate the ground of the drive and measuring circuitry they require extensive application of pulse measurement techniques that may not be available in many laboratories. In no event should a simple resistor be employed in the ground return line, and voltage drop across it monitored.

In the measuring circuit setup of Fig. 4-6, a twisted pair is used to carry the Out Hi and Out Lo terminals from the Model 424 to the load, where the Pearson precision current transformer Model 110 is in series with the low return lead; that is, the low return is threaded once through the opening in the Pearson's toroidal core. Location of the single return wire within the Pearson transformer core is of no practical significance in the accuracy of the measurement.

The Model 424 Measure Hi and Measure Lo terminals are connected to Out Hi and Out Lo, at the load; which includes the Pearson in series with the actual surge load as shown, so that Out Lo and Measure Lo are at the same circuit point. In view of the relatively low input resistance of the Measure Lo input circuitry -- 10K on 1 kV range and 1 K on 100V range, errors up to 0.1A may result from inclusion of the Measure inputs. This represents only 10% of the 1A resolution available on the digital current meter, hance can be neglected.

The surge load can be a short circuit, a protector or a resistor. For a short-circuit, the current obtainable using the particular Programmer Network may be calibrated by comparing scope reading using the Pearson's scale factor of 0.1V/A, with the Model 424 digital output reading. Long leads to the load will naturally reduce the current, but the Pearson and the Model 424 should still agree. For a protector such as a varistor, surge-rated zener or gas tube, realistic current calibration at levels and under conditions of actual use may be obtained. Last, power resistors can be used. Good ones for the purpose are Dale, 250W non-inductive units in 0.1, 1 and 10 ohm values, and a Dale 0.01 ohm, 50W unit.

### 4.3.11 Voltage/Current Cross-Checks

After voltage and current accuracy tests have been separately carried out using the techniques of Sections 4.3.9 and 4.3.10, it is useful to run a cross check to determine whether resistive

* except when used for 10 x 1000 waves over 100A, when an auxiliary termination as recommended in Table 4-1 is used -- 0.01 V/A. (Also applicable to other long waves like 4 x 200, 1500A.)

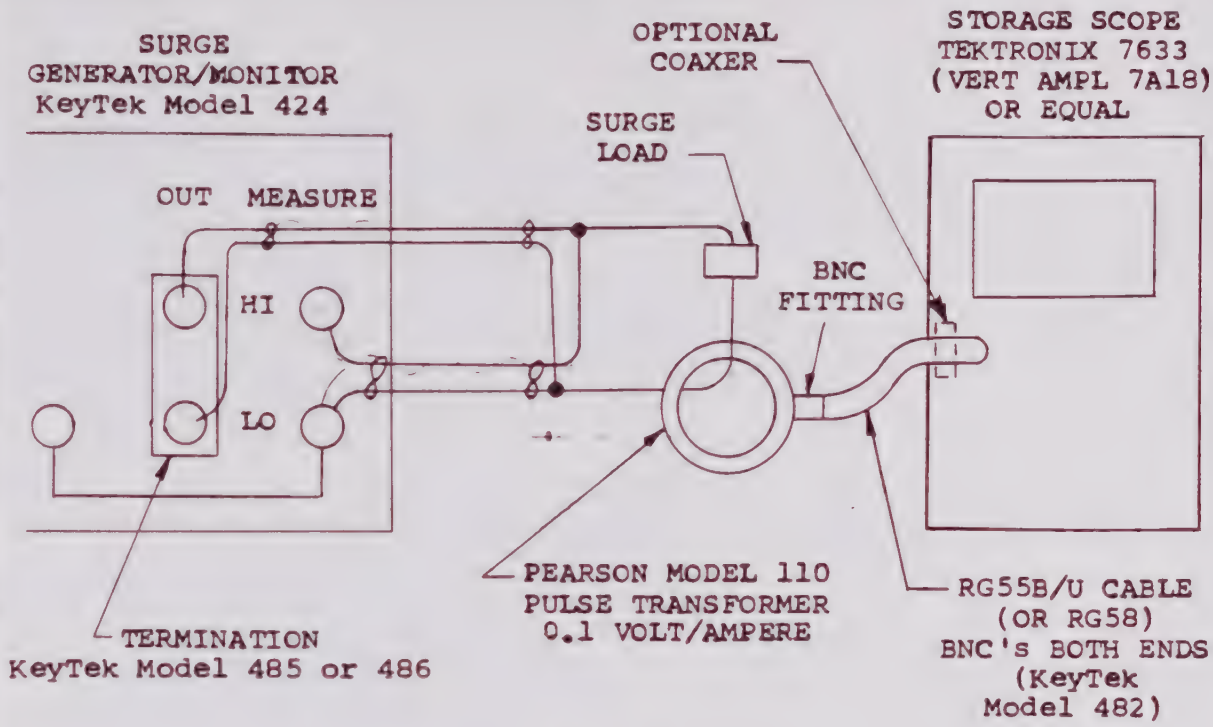


FIG. 4-6
PEAK CURRENT ACCURACY TEST

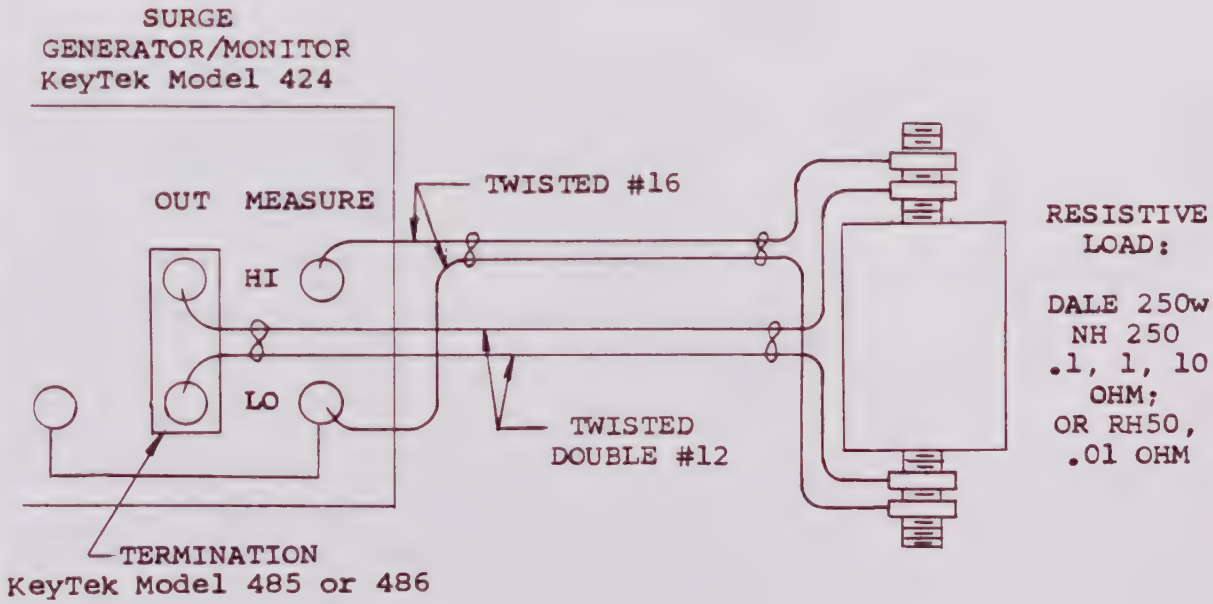


FIG. 4-7
VOLTAGE/CURRENT CROSS-CHECK TEST

loads yield voltage-to-current ratios, measured by the Model 424, that equal the known resistance values. Use of precision resistive loads allows independent cross-checks between Model 424 voltage and current measurements. The ratio of digital voltage to current indications should equal the value of the resistor being surged. A Kelvin, four-wire measurement is necessary in view of the high currents involved; and in addition, in order to get the measured current to equal the measured voltage divided by the resistive load, the drive leads to the load must be very low in resistance compared with the load resistor being used.

Fig. 4-7 shows the test setup for three resistance values: 0.1, 1 and 10 ohms. Naturally the 0.1 ohm resistor presents the largest problem. Twisted double #12 leads, not longer than eight inches, are run from the Out Hi and Out Lo terminals to the ends of the rather large NH-250 Dale resistor. Connections must be as tight as possible at these end terminations. A twisted pair of #16 wires is connected outside the drive leads at the resistor studs. The total drop in 16 inches of double #12 wire is about a milliohm, or one per cent of the 0.1 ohm load. Longer leads can be used, or single #12 and a correction made for the effect, of course. At the 1% level no correction is necessary, which has its advantages as a test procedure. However, with a .01 ohm resistor load, a 10 % correction will be required.

### 4.3.12 Voltage Monitor

Voltage Monitor output from the KeyTek Model 424 is measured using the setup of Fig. 4-8. Again, the oscilloscope is used as reference, and either open-circuit tests can be run as shown, or protector loads, not shown, can be added to the output terminals as in Fig. 4-5. In any case, the scope examines the output from the V Monitor coax output, and compares it with the reading on the digital voltage display, which has already been calibrated against the scope with the latter as the cross-check 'standard'. (Use with rate-of-rise waves is not recommended.)

### 4.3.13 Current Monitor

In a similar way, using the setup of Fig. 4-9, the output from the I Monitor coax on the Model 424 can be checked against the digital Model 424 reading for short-circuit current, as shown. Again, the digital display has already been calibrated against the scope and Pearson current transformer combination to provide reference readings.

### 4.3.14 Virtual Front Time (Not For Rate-of-Rise Waves)

Virtual front times for open-circuit voltage waves can be measured using the test setups of Fig. 4-4. Since it is a voltage

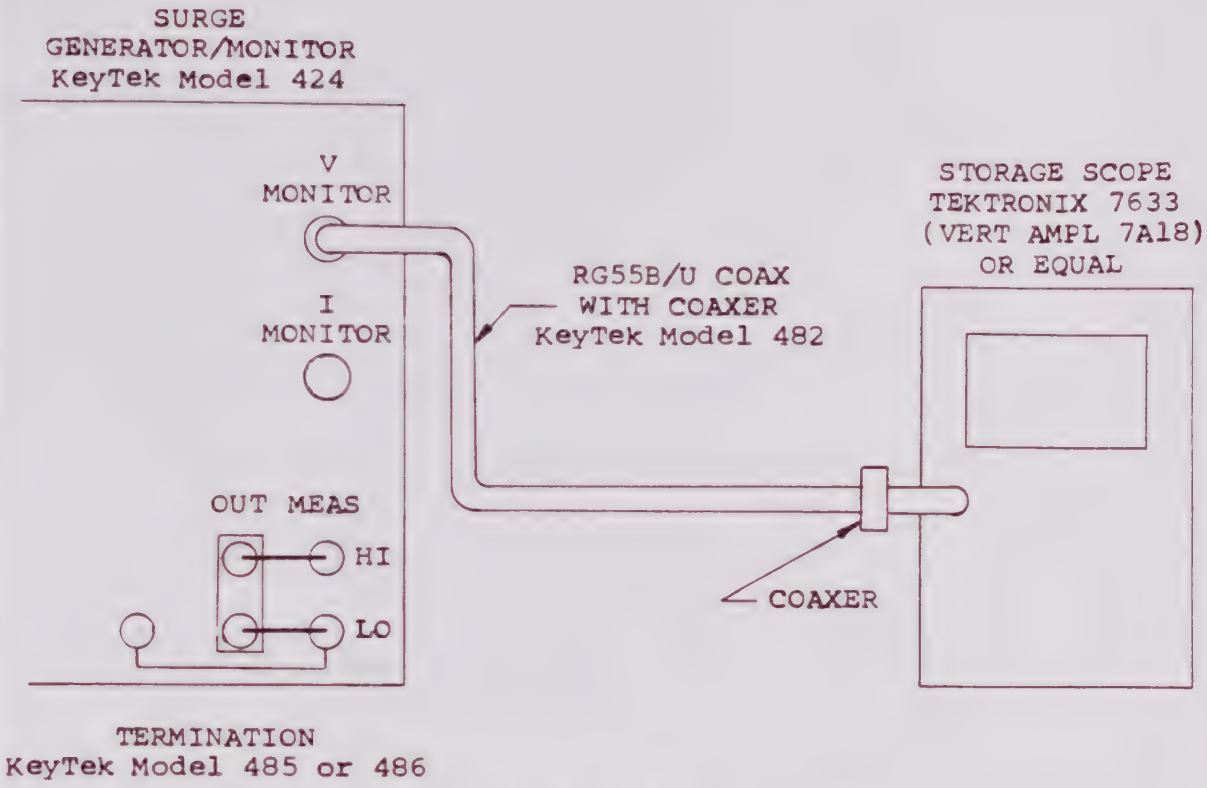


FIG. 4-8
VOLTAGE MONITOR MEASUREMENT

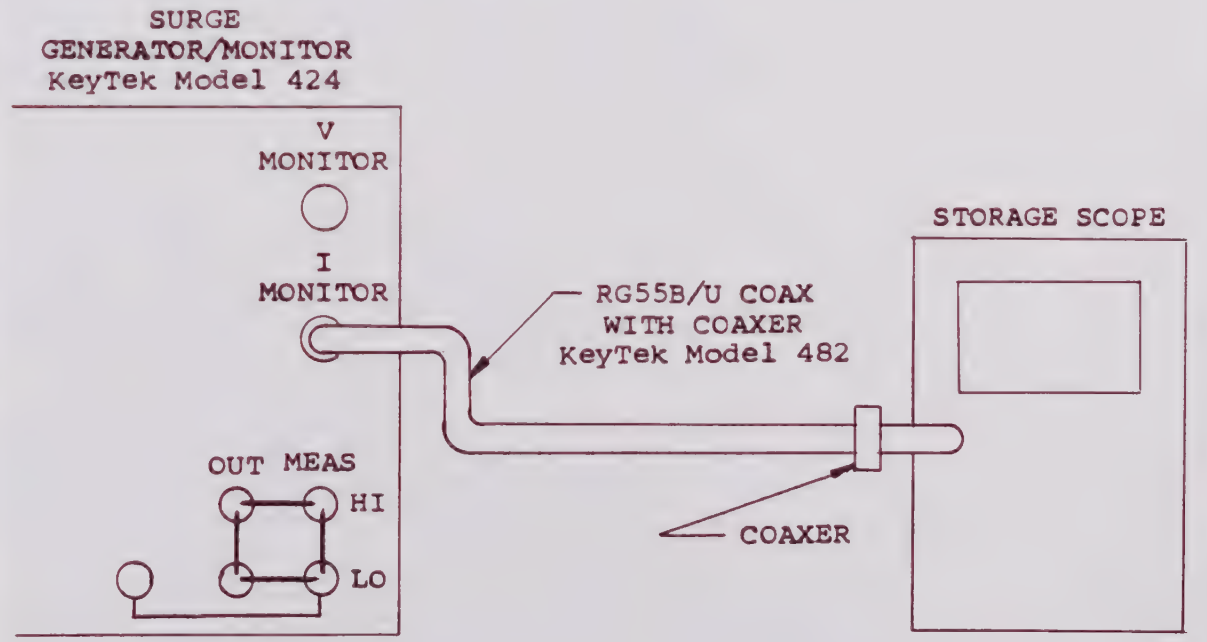


FIG. 4-9
CURRENT MONITOR MEASUREMENT

measurement, the time from 30 to 90 % of wave peak should be measured and then multiplied by 1.67 to obtain the desired virtual front time. Scope time base should first be carefully calibrated using the manufacturer's recommended procedures.

As a cross-check, virtual front time can be measured for current, under the short-circuit conditions shown in Fig. 4-6 using an external current transformer, or Fig. 4-9 using the Model 424's own Current Monitor output. Since current is involved, time between 10 and 90 % of peak value should be measured and multiplied by 1.25 to obtain virtual front time.

4.3.15 Virtual Duration (Not For Rate-of-Rise Waves)

Using the virtual front time measured under Section 4.3.14 above, extend the wave backwards to find the intersection of the 30-to-90 percent line for voltage, or the 10-to-90 percent line for current, to the zero axis. Then measure the time between that 'constructed' axis crossing and the time the wave required to reach 1/2 of peak on its way back down. The difference is virtual duration.

4.3.16 Rate-of-Rise

Measure the time from 300 or 400V to 1000V, and calculate rate of rise as the voltage difference divided by the measured time interval. Note that the errors already mentioned for chopped impulse waves measured by oscilloscopes do not apply to the rate-of-rise itself, since the slope of the wave is unchanged; it is merely delayed. Hence, no correction is required for scopes with less than 10 nsec risetime used for rates-of-rise up to at least 10 kV/usec.

4.3.17 Performance Check List

The Performance Check List in Table 4-3 includes data points for all of the Programmer Networks; while any given Model 424 may be equipped with only some of those that are available. Tests for Programmers unavailable to the installation should simply be omitted. Extra sheets may be required for different Programmers and Programmer switch selections.

Note that the Check List starts with safety and then moves to operational and broad performance checks. Calibration checks are then listed, and refer specifically to the calibration procedure of Tables 4-4 and 4-4A in the following section. 4.4.

TABLE 4-3

PERFORMANCE CHECK LIST

| Function | Programmer | Settings | Manual Reference | Observed Reading | Allowable Limits |
|---|---|---|---|---|---|
| Front Panel Resistance Checks: | | | | | |
| Chassis Ground to: | | | | | |
| 424 rear plug | Any | Both polarities | 4.3.1-2.A. | _____ | < 0.1 ohm |
| Out Hi | All | " | 4.3.1-2.B. | _____ | > 10 M |
| Out Lo | " | " | " | _____ | " |
| Measure Hi | " | " | " | _____ | " |
| Measure Lo | " | " | " | _____ | " |
| V Monitor shell | " | " | " | _____ | " |
| I Monitor shell | " | " | " | _____ | " |
| | | | | _____ | |
| Measure Lo to: | | | | | |
| V Monitor shell | Any | Both polarities | 4.3.1-3 | _____ | < 0.1 ohm |
| I Monitor shell | " | " | " | _____ | " |
| | | | | _____ | |
| Out Lo to: | | | | | |
| V Monitor | " | (+) on Out Lo | " | _____ | > 1 K |
| I Monitor | " | " | " | _____ | " |
| Measure Lo | " | " | " | _____ | " |
| V Monitor | " | (-) on Out Lo | " | _____ | 10 to 20 ohms* |
| I Monitor | " | " | " | _____ | " |
| Measure Lo | " | " | " | _____ | " |
| | | | | _____ | |
| Out Hi to: | Any with push-button switch; but no button in. | | | | |
| Measure Hi | | (+) on Out Hi | " | _____ | > 250 K |
| Measure Lo | " | (-) on Out Hi | " | _____ | " |



* Essentially one diode drop; 10-20 ohms on Simpson 260, May read up to several hundred ohms on other ohmmeters.

** If no push-button equipped Programmer is available, then simply remove Programmer altogether.

+ See section 3.8.3.

TABLE 4-3 (con't)

PERFORMANCE CHECK LIST

| Function | Programmer | Settings | Manual Reference | Observed Reading | Allowable Limits |
|---|---|---|---|---|---|
| Front Panel Indicators: | | | | | |
| Power On | Any | | 4.3.1-8A | _____ | on |
| Charge Ready | " | | -8B | _____ | " |
| Tilt/Power Interlock | " | | -8C | _____ | off |
| Circuit Interlock | " | | -8D | _____ | " |
| Pulse Ready | " | | -8E | _____ | " |
| V Go, No/Go | " | | -8F | _____ | both off |
| I Go, No/Go | " | | -8G | _____ | " |
| High Voltage | " | | -8H | _____ | off |
| 20V/V | " | 100V Range | -9A | _____ | on |
| " | " | 1kV Range | " | _____ | off |
| 200V/V | " | 100V Range | " | _____ | " |
| " | " | 1kV Range | " | _____ | on |
| V Limit Switch Decimal Point | " | 100V Range | " | _____ | " |
| " | " | 1kV Range | " | _____ | off |
| 20V/V | " | Neither 100V nor 1kV Range (both buttons up) | 4.3.1-9B | _____ | " |
| 200V/V | " | " | " | _____ | " |
| V Limit Switch Decimal Point | " | " | " | _____ | " |
| Over/Under Range | " | " | " | _____ | on |
| 20A/V | Any with a range $\leq$150A | $\leq$150A Range | 4.3.1-9C | _____ | " |
| 200A/V | " | " | " | _____ | off |
| 20A/V | Any with a range $\geq$200A | $\geq$200A Range | " | _____ | " |
| 200A/V | " | " | " | _____ | on |

TABLE 4-3 (con't)

PERFORMANCE CHECK LIST

| Function | Programmer | Setting | Manual Reference | Observed Reading | Allowable Limits |
|---|---|---|---|---|---|
| Interlocks | | | | | |
| Tilt/Power | Any | Tilt forward | 4.3.2-1 | _____ | on for < 4"* |
| | | Return | " | _____ | off for > 1" |
| | | Tilt backward | " | _____ | on for < 4"* |
| | | Return | " | _____ | off for > 1" |
| | | Tilt to right | " | _____ | on for < 4"* |
| | | Return | " | _____ | off for > 1" |
| | | Tilt to left | " | _____ | on for < 4"* |
| | | Return | " | _____ | off for > 1" |
| | None | Level | " | _____ | on * |
| Circuit | Any, with a button de-pressed | Out Lo - Measure Lo link open | 4.3.2-1 | _____ | on + |
| | | Re-closed | " | _____ | off + |
| | | Telephone jack plugged in | " | _____ | on + |
| | | Ring (center) connected to Out Lo | " | _____ | off + |
| Charge/Pulse Operation: | All, and set to nominal full peak (except set rate-of-rise Programmers to 1kV) | Charge (+) | 4.3.3 | _____ | Charges (+) |
| | | Charge (-) | " | _____ | Charges (-) |
| | | Pulse (+) | 4.3.4 | _____ | Set V ±5% (except rate-of-rise, Set V $^{+40}_{+20}$%) |
| | | Pulse (-) | " | _____ | " |

*and all other front panel lights off except light in the Power Switch
+and Charge Ready in the opposite state

TABLE 4-3 (con't)

PERFORMANCE CHECK LIST

| Function | Programmer | Setting | Manual Reference | Observed Reading | Allowable Limits |
|---|---|---|---|---|---|
| Open-Circuit Voltage | All | Full nominal peak voltage, except 2/3 for rate-of-rise | 4.3.5 | _____ | ±5% non rate-of-rise, $^{+40}_{+15}$% for rate-of-rise. |
| Open-Circuit Current | All | Full nominal peak voltage | 4.3.6 | _____ | < 5A |
| Over/Under Range Light: | | | | | |
| 100V Range | Any | 200V peak open-circuit, decrease each pulse, past 140V | 4.3.7 | _____ | Blinks and display off to 140, then normal; +0/-5V. |
| 1kV Range | Any rate-of-rise | 1500V; decrease each pulse, till display just appears | " | _____ | Blinks and display blank, for >1599V display; +0/-50V. |
| | Any | Decrease each pulse, to below 40V | " | _____ | Blinks alternately with display for < 40V ±5V. |
| Short-Circuit Current | | | | | |
| Current Display | All, in all selections | Full nominal peak voltage; short on output, as per Fig. 4-1 | 4.3.8 | _____ | Nominal Programmer short-circuit current ±7% non rate-of-rise ±10% for rate-of-rise both ±1 digit. |

TABLE 4-3 (con't)

PERFORMANCE CHECK LIST

| Function | Programmer | Setting | Manual Reference | Observed Reading | Allowable Limits |
|---|---|---|---|---|---|
| Voltage Display | All, in all selections | Full nominal peak voltage; short on output, as per Fig. 4-1 | 4.3.8 | _____ | <I/500, for >5usec virtual front time <I/50, for <5usec virtual front time and for ≤10usec time to crest (see section 1.3) |
| Peak Voltage Accuracy: | See sections 4.4.3-4.4.11, 4.3.9 | | Table 4 or 4A: Step #: | | |
| Plus "zero" | | | 4/4A | _____ | + 0V, - 1V |
| Minus "zero" | | | 5/5A | _____ | " |
| Span, 1kV/100V (+) | | | 6/6A | _____ | ± 40V |
| (-) | | | " | _____ | " |
| Span, 100V (+) | | | 7/7A | _____ | ± 4V |
| (-) | | | " | _____ | " |
| High Frequency (+) | | | 9/9A | _____ | ±100V |
| (-) | | | 10/10A | _____ | " |
| Peak Current Accuracy: | | | | | |
| Plus "zero" | | | 12/12A | _____ | ± 2A |
| Minus "zero" | | | 13/13A | _____ | " |
| Span, 1kA/100A (+) | | | 14/14A | _____ | ± 25A |
| (-) | | | " | _____ | " |
| Span, 100A (+) | | | 15/15A | _____ | ± 7A |
| (-) | | | " | _____ | " |

This page left blank intentionally.


(pages 4-35 and 4-36, following, omitted intentionally)

This page left blank intentionally.

## 4.4 Calibration Procedure

Table 4-4 gives step-by-step calibration procedure in chart form. NOTE: Routine, six-month or less-frequent calibration checks can be run using only the items followed by asterisks. The full calibration procedure need be used only after replacement of a failed component, or if some difficulty shows up during the abbreviated check.

HOWEVER, the electronic circuits in the Model 424 are designed to be comparable with long-term stabilities of better than 0.25%, far better than required circuit performance. And, components, including those involved directly in the surges themselves, are designed to fully withstand rough usage over a period of years without significant change in value. HENCE, RE-CALIBRATION SHOULD BE UNDERTAKEN ONLY IF THE PERFORMANCE TESTS OF SECTION 4.3 CLEARLY INDICATE A PROBLEM EXISTS INTERNAL TO THE MACHINE. When possible, double check via one of the alternate performance check methods already described in Section 4.3, and recheck all external equipment and calibrations, especially scope probes and tightness of all connections.

In effect, all of the adjustments in the Model 424 are factory adjustments, and should not have to be reset during the entire life of the equipment, except in the event of failure of some component. If there is a discrepancy in the Performance Check List of Section 4.3.17 from previous data, it is far more likely that a component has failed or a piece of external test equipment has changed -- like a scope probe compensation -- than that a Model 424 adjustment must be reset. Replacement of the failed or marginal component, or fixing the problem in the external test equipment, will probably make unnecessary any readjustment of the Model 424 calibration potentiometer settings, although this should be verified by running through the calibration check -- or the full procedure -- of Table 4-4.

NOTE: It is advisable to make calibration adjustments only at ambient temperatures between 20 and 25°C. Calibration checks can, of course, be made at any temperature within the Model 424's operating range.

### 4.4.1 Access to Adjustments

All adjustments may be reached by removal of the top cover of the Model 424. Remove the two phillips-head screws at the top rear that secure the cover, and slide the cover to the rear and off the unit. See Fig. 4-10 for location of all calibration adjustments.

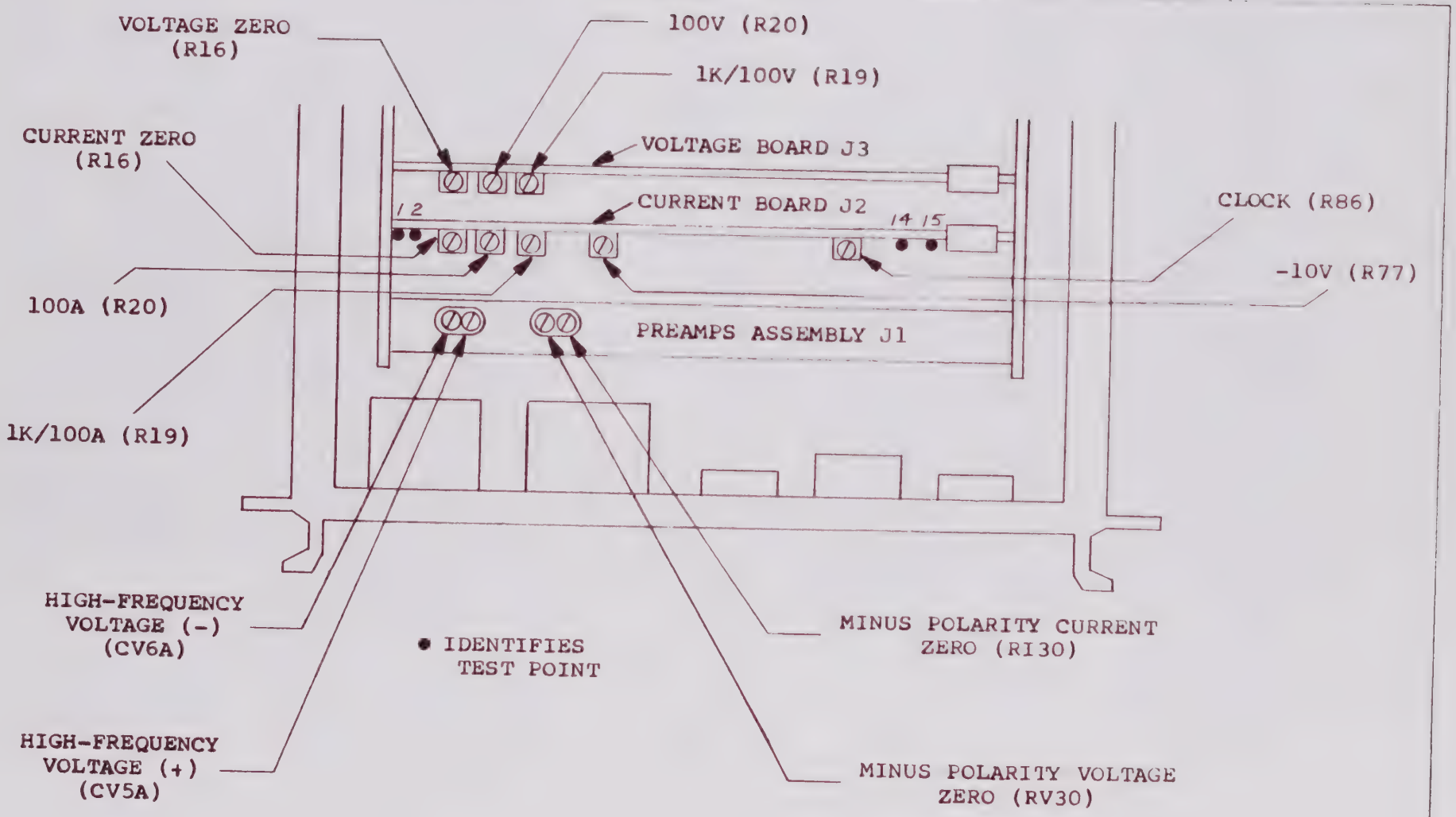


FIG. 4-10
CALIBRATION ADJUSTMENT LOCATIONS

### 4.4.2 Surge Standards

Some of the most useful devices listed in Table 4-1, List of Equipment to Inspect and Calibrate KeyTek Model 424 Surge Generator/Monitor, are the Surge Standards indicated as optional at the end of the table. They are in Table 4-1 and not Table 4-2, Optional Additional Equipment, since they make both routine checks and full calibration so very easy compared to other methods. However since they can be done without if not available, they are also indicated as optional.

The concept behind the Surge Standards is that only four devices are required to permit complete checking and calibration of voltage surge measurement performance:

1. one at about 7 volts;
2. another at about 100 volts;
3. a third at about 800 volts, and
4. for applications in which gas tubes will be driven with rates of rise to 10 kV/usec, a gas tube standard preferably traceable to a National Standardizing Laboratory such as the National Bureau of Standards.

It must be emphasized that none of these is necessary if a good scope of one of the kinds recommended is available; however, calibration time is significantly reduced compared to that required with an oscilloscope, if Surge Standards like those listed can be used.

### 4.4.3 6.8V Surge Standard

In practice, the 7-volt requirement is most readily met using a 6.8V avalanche device as indicated in Table 4.1. HOWEVER, to protect oscilloscope and/or probe inputs from the full Model 424 1.000 or 1.500V output in the event that the device should fail, it should be shunted by a 12V device to set a reasonable upper limit. (Obtaining readings of 12 or 13V then indicates the 6.8V device has failed).

The 6.8V Surge Standard should be surged at a relatively low rate of rise, and at a standardized peak current, in order to obtain repeatable results. Use the 1.00V Model 424 Digital Monitor range. The following Programmer Networks and current selections are acceptable alternates:*

| Programmer | Mode | Set peak open-circuit voltage to | Approximate Resulting Peak Current |
|---|---|---|---|
| PN 241 | 15A | 1500 | 15A |
| PN 242 | 20A | 1000 | 20A |
| PN 244 | 20A | 1000 | 20A |
| PN 246 | 500V/usec | Note: 600V | 20A |

*For other Programmers, consult factory.

### 4.4.4 100V Surge Standard

The 100V device is best made up of five, 20V avalanche devices in series, to provide sufficient current-carrying capacity to insure against failure even if misapplied -- that is, inadvertantly driven with too great a surge. The string should be shunted by a somewhat higher-voltage protector to guard the scope probe and input amplifier again, such as a 130V (ac rated) metal-oxide varistor.

The 100V Surge Standard should also be surged at a relatively low rate of rise, and at a standardized peak current, again chosen as 15 to 20A. Use 100V Model 424 Digital Monitor range to calibrate or check the high end of this range; use the 1000V range when checking the low end of that range. Note that ordinarily the Model 424 Voltage Monitor zero is adjusted at the low end of the 100 V range, i.e. at about 7 volts, and then merely checked at the low end of the 1000V range -- there is no separate adjustment for the low end of the 1000V range. The following Programmer Networks and current selections are acceptable alternates:*

| Programmer | Mode | Set peak open-circuit volts to | Approximate Resulting Peak Current |
|---|---|---|---|
| PN 241 | 15A | 1500 | 15A |
| PN 242 | 20A | 1000 | 20A |
| PN 244 | 20A | 1000 | 20A |
| PN 246 | 500V/usec | Note: 700V | 20A |

### 4.4.5 800V Surge Standard

The 800V device can either be a string of several varistors, or eight, 100V avalanche devices. (Use of four, 200V devices is not recommended since their current ratings make them too vulnerable to even slight mistakes in application). No higher-voltage protector is necessary or possible, in view of the fact that a high-voltage scope probe must be used anyway. (Care should be taken, however, in use of 1000V probes; application of open-circuit output from a rate-of-rise wave such as the 100V/usec, for example, will apply up to 2 kV peak if the 800V protector isn't in the circuit. Fire the Model 424 several times first, to insure that the 800V limiter is functioning, before connecting the scope when a scope is used.)

The 800V Surge Standard should also be surged at a relatively low rate of rise, and at a standardized peak current. In this case, standardized current is chosen as 4 to 5A, and great care must be taken to see that it is not exceeded since the best 800V Surge Standards are made from a string of 100V avalanche protectors, whose current ratings

*For other Programmers, consult factory.

are far less than the available current from Model 424 Programmer Networks in their higher current modes. In particular, for a 10x1000 current pulse, a 100V avalanche protector can handle 10 to 11A; with higher figures implied by narrower waves. It is clear that a PN 241 even in 15A Mode, with peak open circuit voltage set to 1500V (so that peak current may be the rated 15A), will be sufficient to destroy a 100V protector if surged alone. Fortunately it is in a string of eight, so that the 15A Mode will result in only about 7 to 8A for the 800V string. HOWEVER, the 60A Mode will destroy the 800V string as may full currents from most of the other Programmers.

The following Programmer Networks and current selections are acceptable alternates:*

| Programmer | Mode | Set peak open-circuit voltage to** | Approximate Resulting Peak Current |
|---|---|---|---|
| PN 241 | 15A | 1300 | 5A |
| PN 242 | 20A | 1000 | 4A |
| PN 244 | 20A | 1000 | 4A |
| PN 246 | 500V/usec | Note: 950 | 5A |

**Minor adjustments may be required as tolerances on the 100V avalanche devices may be 5 to 10%. Set voltage to obtain 4 to 5A peak currents.

4.4.6 Gas-Tube Surge Standard

The gas tube standard should be a tube or hierarchy of tubes, whose average breakdown voltages for both + and - 10 kV/usec rates-or-rise are known. Further, the standard deviations in a series of ten or twenty shots making up the average should preferably be 15 to 20 volts, and not more than 35 to 40 volts. Last, multiple series of shots should be taken repeatedly over a period of time, to make sure the gas tube selected as a standard is not changing its readings.

Finally, since the gas tubes must almost inevitably change striking potential with large numbers of firings, it is useful to keep a hierarchy of tubes, perhaps in three tiers. The first set is the working standards, the second the secondary standards and then finally, primary standards. Secondary standards should be infrequently compared with primaries, to insure minimum usage for the primaries; and the working standards compared more frequently with secondaries. There will usually be more secondaries than primaries, and likewise more working standards than secondaries.

Every six to twelve months, depending on usage, it may be desirable to have the primaries rechecked by a

* For other Programmers, consult factory.

reputable laboratory including the possibility of the National Bureau of Standards. This service is also available from KeyTek Instrument Corp.; contact factory for further details.

For these calibrations, use only the 10 kV/usec Mode, via either the PN 245 or the PN 246 Programmer Network.

4.4.7 Connections for Surge Standards

It is important that Surge Standards be connected to the Model 424 Output and Measure terminals in a repeatable manner, not only to insure consistency of results, but also to permit interchangeability of Standards from unit to unit and from laboratory to laboratory.

Specifically, the connection method of Fig. 2-7 on page 2-16 is recommended: with the Surge Standard connected as closely as possible to the Measure terminals. It can conveniently be mounted on a dual banana plug such as the Pomona type MDP (as recommended in Table 4-2 for Optional Additional Equipment), or perhaps preferably enclosed within an adapter such as the Pomona type 2259.

The connections from Out Hi to Measure Hi and Out Lo to Measure Lo should then be made on top of the Surge Standard at the Measure terminals. The connections are again most conveniently made via two dual banana plugs, with a piece of short, twisted high-voltage (1 kV or better) wire between. (Type EE teflon is a readily-available type; also Type D PVC, with or without the nylon jacket. #16 wire guage, stranded, is recommended).

Finally, mount the termination on top of the dual banana connection at the Measure terminals -- either Model 485 or 486, supplied as part of the Model 424 at initial shipment (see Table 4-1, also page 2-12 item 1, Fig. 2-7 on page 2-16, and/or page 2-18 item 8, OUTPUT TERMINATION.)

Summarizing, the Output terminals have merely a dual banana plug connecting on a few inches of twisted wire to the Measure terminals. The Measure terminals have, in this order:

1. Surge Standard, mounted on either a dual banana or else, for both safety and convenience, within an enclosure such as the Pomona 2259

2. Dual banana at the other end of the few inches of twisted wire connected to the Output terminals, and finally

3. Termination, KeyTek Model 485 or 486. (For some Programmers, Model 487).

### 4.4.8 Surge Standard Calibration

Surge Standards may, in general, be calibrated using suitable oscilloscopes with some limitations. Alternately, calibrations on the 6.8V, 100V and 800V Standards may be obtained from KeyTek Instrument Corp. (consult factory for further information). Calibrations can be obtained on 10 kV/usec gas tube performance from either KeyTek or the National Bureau of Standards if and when the latter institution establishes a calibration service for the devices. Calibrations for gas tube performance can also be obtained using oscilloscopes, but the need for a central standardization -- preferably traceable to the NBS, is far greater in view of the difficulty involved in obtaining accurate measurements in this area.

When oscilloscopes are used to perform calibration of the Surge Standards, the following limitations should be observed:

1. So-called "surge oscilloscopes" like the 507 don't have sufficient sensitivity to permit accurate measurements on the 6.8V and even of the 100V standards (sensitivity is 50V/cm, maximum).

2. Any oscilloscope, including the Tektronix 7633 as recommended (with EMI option only -- see Table 4-1), will require a high-voltage probe for use typically above 600V peak.

3. Any scope will require careful dc calibration for y-axis sensitivity, preferably at the points to be measured, to eliminate the effects of CRT non-linearity as much as possible. The scope should be calibrated with the probe to be used, since several per cent error may result from tolerances of both probe impedance and scope input impedance -- 1M for storage scopes and 72 ohms for surge scopes are typical figures, with several per cent tolerance.

4. Any scope probe other than 1:1 will require careful ac setup, via the built-in square wave provided with modern storage scopes; to insure against erroneous peak readings particularly on the 10 kV/usec rates.

These calibration problems are the main reasons for favoring use of inter-laboratory comparisons, with either KeyTek or the NBS, at the very least for gas tube work at 10 kV/usec rates of rise. Errors of only a few nanoseconds can result in discrepancies of tens of volts, and on top of that the tubes are statistical in performance -- firing at somewhat different potentials on successive shots, so

that averages of ten or twenty shots must be taken to give numbers suitable for comparison with other runs and with other laboratories.

4.4.9 Calibration Using an Oscilloscope

An oscilloscope is invaluable even when Surge Standards are available, to keep them in calibration, as indicated in the preceeding paragraph. When such Standards aren't available, the oscilloscope may be used by itself, presuming it meets both sensitivity and speed requirements. See Table 4-1 for scope suggestions, and/or consult factory in the event of question.

When using an oscilloscope to perform direct calibration without Surge Standards as intermediary, Measure and Out terminals should be directly connected, and no load applied. The Termination (KeyTek Model 485 or 486) should be connected directly to the Measure terminals. The Peak Open Circuit Voltage should be set to the (approximate) desired level at which calibration is being carried out. Preferably, it can be set so that the peak occurs at a scope graticule marker which has been previously dc-calibrated; this makes for more accurate scope measurements, as well as greater resolution in readability.

NOTE: Setting the Model 424 output to specific peak voltages as read on a scope can be tedious, especially at the 6-12V and 100V levels. This is one of the principal reasons for using Surge Standards. Another reason is that Peak Open Circuit output is a function of ac line voltage, unless a regulator is in use. (See Section 2.8). If the line varies, calibration without Surge Standards can be still more time-consuming, even though effect of line variations on Model 424 actual surge performance -- and measurement -- is unimportant.

A further note should be made of the fact that since rate-of-rise waves overshoot 25 to 35%, fine settings should be made with reference to the scope (as they should anyway), and significant differences should be expected between the Model 424 analog meter and the scope readings for these waves. (See section 3.4.1).

4.4.10 Calibration Results Required

The "Results Required" column in Calibration Table 4-4 calls for performance that represents a compromise between desired performance and realistic assessment of test equipment likely to be available. The figures are within Model 424 specifications; indeed the unit can be calibrated much more closely than the indicated figures,

but there might be a far greater rate of recalibration due merely to lack of high-enough repeatability in the external measuring equipment.

In short, on initial calibration the figures listed may not be stringent enough -- it may be desired to set the unit right at its calibration points. However, on rechecks, it may well be reasonable, depending on repeatability of the measurements, to allow 1.5 to 2x higher deviations than those listed before opening the Model 424 to readjust.

4.4.11 Corrections at 10 kV/usec

As already indicated, a peak reading at 10 kV/usec is a difficult measurement to make, whether by scope or by peak detector, when a gas tube chops the ramp. Scopes have errors, probes are hard to calibrate and so on. For this reason, Surge Standard gas tubes are very much to be preferred for calibrations when they are available.

If closer performance figures are desired that the Model 424 specifications and/or performance will permit, the Model 424's high stability permits use of corrections, a concept well-established in other fields of measurement.

Briefly, if via use of a Surge Standard gas tube, or via careful scope calibration, the Model 424 Voltage Monitor reading at 10 kV/usec on a gas tube is found to differ at a given voltage level -- say, 700V for example -- it is reasonable to apply the difference as a correction for all Model 424 readings around that level -- within ± 100V, say.

Thus if the Model 424 reads 725V for a Standard known to be 775V, Model 424 readings can be corrected in this vicinity by increasing them by 50V. (If the Model 424 go/no go displays are in use, the correction can be introduced merely by offsetting the digiswitch settings accordingly.)

Use of the correction concept is particularly applicable if Surge Standard gas tubes give different differences for several voltage levels -- at 600V, say, versus 1000V. Calibration can be reset for one of the figures, but not for both. Thus if the unit is calibrated at 1000V, a correction can be developed, via a suitable Standard or scope calibration, at the 600V level; and vice versa. Naturally, these techniques are useful only when accuracy of the Surge Standards is trusted to be within 30 or 40V, or the scope calibration techniques are believed valid within comparable uncertainties. And it goes without saying that measurements to these low uncertainties must be made with extreme attention to repeatability in regard to gas tube polarities, wiring, termination locations and the like.

4.4.12 Use of Test Fixtures, Other Lead Arrangements

Use of Test Fixtures such as the KeyTek Model 450 can greatly facilitate test throughput, in addition to providing extra safety for operators. In addition, existing test setups of other kinds may well require longer leads to the devices under test than the few inches recommended in Section 4.4.7 for Calibration purposes with the Surge Standards.

In any event, care should be taken to use coaxial connections for both Out and Measure connections, as indicated in Fig. 2-4(b) on page 2-11.

The Model 424 can be "off-calibrated" to some extent for fixture and/or wiring errors; but far preferable is use of corrections derived by insertion of a Surge Standard into the fixture, or wiring configuration actually to be used, and comparing results with those obtained with the Standard connected as per recommendations of paragraph 4.4.7. This implies Surge Standards with leads to fit into the fixture (as will be the case with the Model 450 Test Fixture), but once the corrections are determined for the fixture for the waves, currents and voltage levels involved -- different corrections may be required as these conditions are changed -- they should be quite stable so long as the fixturing remains unchanged.

Again it should be emphasized that these considerations only influence performance at the very limits of state-of-art accuracy, and are included here only to provide a complete picture of the kinds of things that the Model 424 can accomplish in view of the high degree of stability inherent in its performance and calibration.

TABLE 4-4

PREFERRED CALIBRATION PROCEDURE
(For routine checks, use starred items only)

| Step No. | Purpose | Method | Measure Results | Results Required (see 4.4.10) | Adjust (If Necessary) |
|---|---|---|---|---|---|
| 1 | Provide access to adjustments | Open top cover (see section 4.4.1). | NOTE: ONLY NECESSARY IF ADJUSTMENTS NEED TO BE MADE. DO NOT REMOVE COVER FOR ROUTINE CHECKS. | | |
| 2 | Check internal clock frequency | Use counter to measure. | Counter input to TP 14, return to TP 15 on Current board. (TTL voltage levels.) | 100 kHz ± 0.5% | "Clock" (R86), on Current board. |
| 3 | Check internal voltage reference | Use digital voltmeter with accuracy of at least 0.25% at 10 volts. | DVM input to TP 2, return to TP 1, on Current board. | -9.98V to -10.02V | "-10V" (R77), on Current board. |
| 4* | Check plus voltage "zero" (low end of 100V range) | Use 6.8V Surge Standard (see sections 4.4.2, 4.4.3, 4.4.7, 4.4.8) (Cathode high). | Model 424 digital output, on 100V range. (Use charge (+).) | Nominal calibrated Surge Standard voltage, + 0V, - 0.4V. | "Voltage Zero" (R16), left-most on Voltage board. |
| 5* | Check minus voltage "zero" | Same as Step 4, except anode high. | Same as Step 4, except use Charge (-). | Same as Step 4: tolerances on magnitude of reading (that is, ignoring minus sign). | "Minus Polarity Voltage Zero" (RV30), Preamps Assembly. |

TABLE 4-4 (con't)

| Step No. | Purpose | Method | Measure Results | Results Required (see 4.4.10) | Adjust (If Necessary) |
|---|---|---|---|---|---|
| 6* | Check 1 kV (and 100V) range span | Use 800V Surge Standard (see sections 4.4.2, 4.4.5, 4.4.7, 4.4.8). | Model 424 digital output, on 1 kV range only. Use Charge (+) with cathode high, Charge (-) with anode high; then average the two readings. | Nominal calibrated Surge Standard voltage for the average of the two readings, ± 10V. (+) versus (-) readings, less than 15V. | "1K/100V" (R19), right-most on Voltage board. |
| 7* | Check 100V span | Use 100V Surge Standard (see sections 4.4.2, 4.4.4, 4.4.7, 4.4.8). | Same as 6, except 100V range. | Same as 6, except 1V and 1.5V instead of 10V and 15V. | "100V" (R20), middle on Voltage board. |
| | | NOTE: If the difference between (+) and (-) magnitude exceeds limits, then high-frequency adjustments may be off. Proceed to steps 8 and 9 before checking further; then repeat steps 4-7 if (9) has required adjustment changes. | | | |
| 8 | Repeat steps 4 through 7 until no further changes are necessary. | | | | |
| 9* | Check high-frequency voltage performance, (+) 10 kV/usec ramp (if not available, use fastest risetime Programmer on hand, with current preferably less than 50A). | Use gas-tube Surge Standard (see sections 4.4.2, 4.4.6, 4.4.7, 4.4.8). | Model 424 digital output, on 1 kV range (use Charge (+)). Take 10 readings if Check; 20 if re-calibration. | Nominal calibrated Surge Standard voltage, ± 100V if Check, ± 50V if re-calibration (see section 4.4.11). | "High-Frequency Voltage (+)" (CV5A), on Preamps Assembly. (Adjust about 10 to 15 degrees at a time.) |

TABLE 4-4 (con't)

| Step No. | Purpose | Method | Measure Results | Results Required (see 4.4.10) | Adjust (If Necessary) |
|---|---|---|---|---|---|
| 10* | Same as (9) except (-) polarity. | Same as (9) | Same as (9) except use Charge (-). | Same as (9) | "High-Frequency Voltage (-)" (CV6A), on Pre-amps Assembly. (Adjust about 10 to 15 degrees at a time.) |
| 11 | Repeat steps 4 through 10 until no further changes are necessary. | | | | |
| 12* | Check plus current "zero" | Use Pearson current transformer and scope. Use 20A nominal selection on Programmer (except PN 243), if available. If not, use lowest available current selection (it must be below 100A), and use "Set Voltage" dial to get digital peak current display to read about 20A. | Scope peak versus Model 424 reading, using circuit of Fig. 4-6 (p. 4-22), short-circuit for load, and short leads (only several inches). (Note: direction of arrow on Pearson is defined as opposite to normal direction of current flow.) | Agreement within ± 2A. | "Current Zero" (R16), on Current board. |

TABLE 4-4 (con't)

| Step No. | Purpose | Method | Measure Results | Results Required (see 4.4.10) | Adjust (If Necessary) |
|---|---|---|---|---|---|
| 13* | Check minus current "zero" | Same as (12) | Same as (12) | Agreement within ± 2A. | "Minus Polarity Current Zero" (RI30), on Preamps Assembly. |
| 14* | Check 1 kA (and 100A) range span. Perform only if a Programmer is available with nominal current over 100A. | Use Pearson current transformer (see Table 4-1) and scope. NOTE: use highest current available.* | Same as (12) | Agreement within ± 3% rdg ± 5A for both polarities. | "1K/100A" (R19), on Current board. |
| 15* | Check 100A range span. Use both polarities. | Use Pearson current transformer and scope. Note: use 100A position on any Programmer except PN 243, or use highest current position available below 100A, if 100A is unavailable. | Same as (12) | Agreement within ± 3% rdg ± 1A for both polarities. | "100A" (R20), on Current board. |

16 Repeat steps 12 through 16 until no further changes are necessary.

* except for 10 x 1000, when currents over 100A should not be exceeded unless an auxiliary termination is used as recommended in Table 4-1, for the Pearson. (Higher current waves can be used without the auxiliary termination if only peak and not total waveshape is required.) Also true for 4 x 200 at 1500A.

This page left blank intentionally.

This page left blank intentionally.

TABLE 4-4A

ALTERNATE STEPS FOR CALIBRATION PROCEDURE
(For routine checks, use starred items only)

| Step No. | Purpose | Method | Measure Results | Results Required (see 4.4.10) | Adjust (If Necessary) |
|---|---|---|---|---|---|
| 4A* | Check plus voltage "zero" (low end of 100V range) | Use scope per section 4.4.9. Set between 6 and 12V. | Model 424 digital output, on 100V range, versus scope reading. (Use Charge (+)). | 424 reading minus scope reading to be + 0V, - 0.4V. | "Voltage Zero" (R16), left-most on Voltage board. |
| 5A* | Check minus voltage "zero" | Same as (4A). | Same as (4A), except use Charge (-). | Same as (4A): tolerances on magnitude of reading (that is, ignoring minus sign). | "Minus Polarity Voltage Zero" (RV30), Preamps Assembly. |
| 6A* | Check 1 kV (and 100V) range span | Use scope per section 4.4.9. Set between 800V and 1000V. | Model 424 digital output, on 1 kV range only, versus scope reading. Use Charge (+) and Charge (-) to obtain both polarities. | 424 average readings minus scope average readings (magnitudes only) to be ±15V. (+) versus (-) readings, less than 15V. | "1K/100V" (R19), right-most on Voltage board. |
| 7A* | Check 100V span | Use scope per section 4.4.9. Set between 80 and 120V. | Same as (6A), except 100V range. | Same as (6A), except 1.5V instead of 15V. | "100V" (R20), middle on Voltage board. |

NOTE: If the difference between (+) and (-) magnitude exceeds limits, then high-frequency adjustments may be off. Proceed to steps (8) and (9A) before checking further; then repeat steps (4) through (7) if (9A) has required adjustment changes.

TABLE 4-4A (con't)

| Step No. | Purpose | Method | Measure Results | Results Required (see 4.4.10) | Adjust (If Necessary) |
|---|---|---|---|---|---|
| 9A* | Check high-frequency voltage performance, (+) 10 kV/usec ramp (if not available, use fastest risetime Programmer on hand, with current preferably less than 50A). | Use scope per section 4.4.9, with gas tube at 10 kV/usec. | Model 424 digital output, on 1 kV range, versus scope reading. (Use Charge (+).) If waveform irregular, see sections 2.9.1, 2.9.2. Best to average several readings. | 424 reading minus scope reading to be ±100V if Check, ± 50V if Re-calibration (see section 4.4.11). | "High-Frequency Voltage (+)" (CV5A), on Preamps Assembly. (Adjust about 10 to 15 degrees at a time.) |
| 12A* | Check plus current "zero" | Use Power resistors as recommended in Table 4-2, pages 4-5 and 4-6; drive as per Fig. 4-7 (p. 4-22) as described in 4.3.11. Use 10 ohm resistor, using 20A. Do not use PN 243, its leading edge is too fast for this test at high enough accuracy for calibration.) | Model 424 voltage reading (as already calibrated) versus current reading. NOTE: full scale current will not result, in view of the divider ratio between Programmer output resistor R (Table 2-1, p.2-40) and the load. What is important is the voltage/current ratio, which should be one ohm. | Indicated Model 424 voltage/current ratio should be between 0.95 and 1.05. | "Current Zero" (R16), on Current board. |

TABLE 4-4A (con't)

| Step No. | Purpose | Method | Measure Results | Results Required (see 4.4.10) | Adjust (If Necessary) |
|---|---|---|---|---|---|
| 13A* | Check minus current "zero" | Same as (12A) | Same as (12A) | Same as (12A) | "Minus Polarity Current Zero" (R130), on Pre-amps Assembly. |
| 14A* | Check 1 kA (and 100A) range span. Use both polarities. Perform only if a Programmer is available with nominal current over 100A. | Same as (12A); use 1 ohm if 500A is available. NOTE: use highest current available. * | Same as (12A) | Same as (12A), for both polarities. | "1K/100A" (R19), on Current board. |
| 15A* | Check 100A range span. Use both polarities. | Same as (12A); use 10 ohm resistor. | Same as (12A) | Same as (12A), for both polarities. | "100A" (R20), on Current board. |

* See note page 4-51.



(pages 4-57 and 4-58, following, omitted intentionally)

## 4.5 Trouble Shooting

The modular elements of the Model 424 are removable. From front to back these include the following boards or sub-assemblies (see Figs. 4-10 and 4-11):

| | |
|---|---|
| Preamps Assembly | (J4) |
| Current Board | (J3A,J3B) |
| Voltage Board | (J2A,J2B,J2C for Option |
| Program Readout Board (Option P only) | (J2D) |
| Control and High-Voltage Board | (J1) |
| Regulators | (J7,J8) |

The following paragraphs provide a logical procedure for isolating faults.

If it is determined that faulty operation is occurring, remove the top cover by removing the two screws at the top rear that secure the cover, and slide the cover to the rear and off the unit. Examine the interior of the unit for obvious malfunction, a loose connection, missing component, foreign matter, or other suspicious or obvious defect.

Table 4-5 lists a number of malfunctions, one or more of which may be used as a starting point to locate the cause of trouble. The table refers further to detailed trouble-shooting procedures covering each section of the Model 424. In using the table and the trouble-shooting procedures, reference should be made to the appropriate schematics and location drawings.

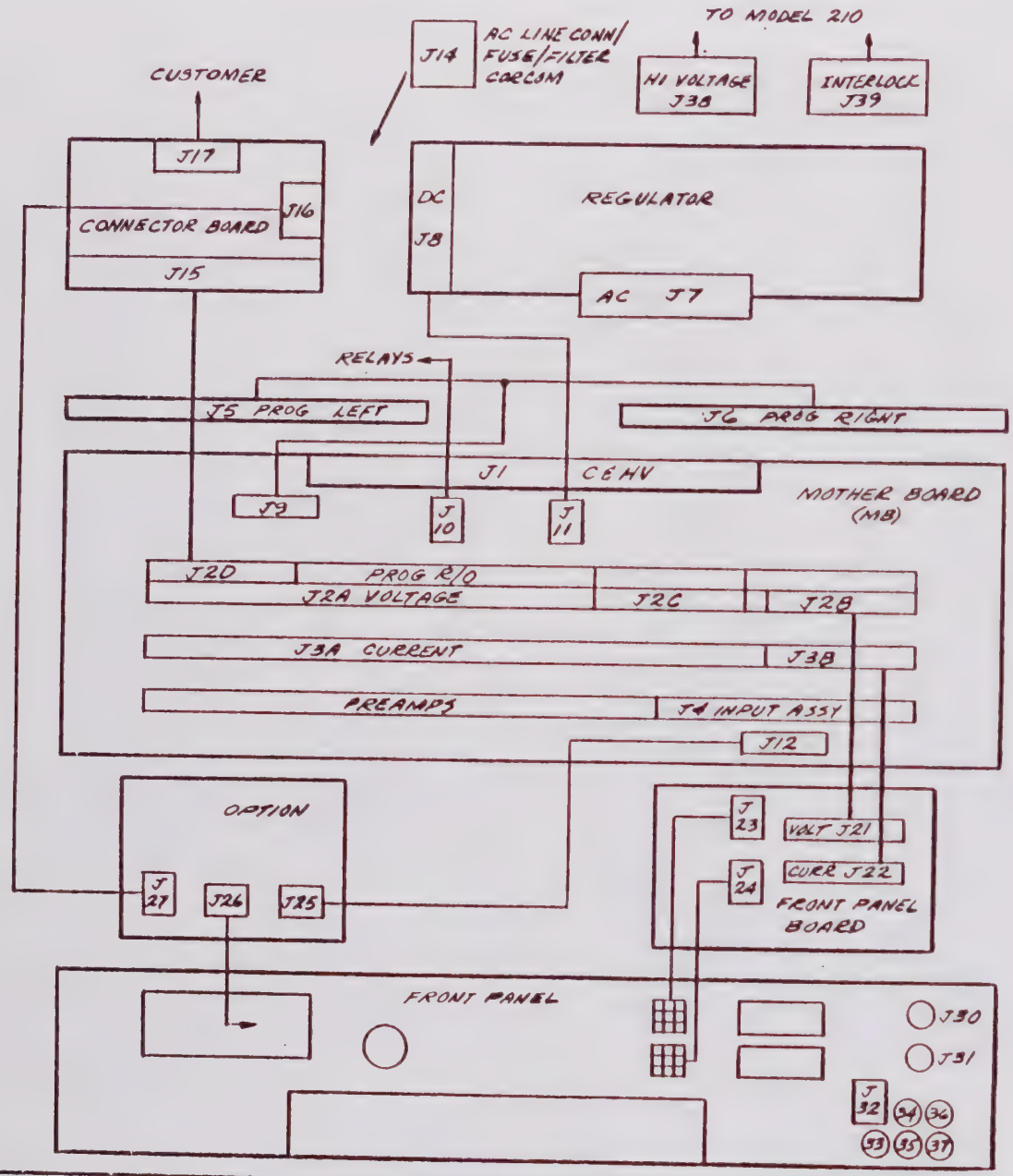


J1 C&HV
J2A VOLTAGE MAIN
J2B TO FP
J2C TO PROG R/O
J2D PROG/R.O. TO CONN BD
J3A CURRENT MAIN
J3B TO FP
J4 INPUT ASSY
J5 PROGRAMMER LEFT
J6 PROGRAMMER RIGHT
J7 REGULATOR AC
J8 REGULATOR DC
J9 MB TO PROG
J10 MB TO BOX
J11 MB TO REG
J12 MB TO FP (FUTURE OPTION TO J25)
J13
J14 AC LINE CONN
J15 CONN BD TO PROG/READOUT BOARD J2D
J16 CONN BD TO FP (FUTURE OPTION TO J27)
J17 CONN BD TO CUSTOMER
J18
J19
J20
J21 FP BOARD TO J2B VOLTAGE BOARD
J22 FP BOARD TO J3B CURRENT BOARD
J23 FP BOARD TO VOLTAGE DIGISWITCHES
J24 FP BOARD TO CURRENT DIGISWITCHES
J25
J26
J27
J28
J29
J30 V MONITOR
J31 I MONITOR
J32 EXTERNAL ADAPTER
J33 CHASSIS, FP TERMINAL
J34 OUT HI
J35 OUT LO
J36 MEASURE HI
J37 MEASURE LO
J38 HI VOLTAGE TO MODEL 210
J39 INTERLOCK TO MODEL 210

FIG. 4-11
GENERAL LOCATION DRAWING

TABLE 4-5

TROUBLE-SHOOTING CHART

| Symptom | Possible Cause or Procedure |
|---|---|
| 1. No display, decimals, or other panel lights with power switch on. | Check main power fuse F1, on rear panel. (Make sure it is 2A slo-blo for 115V operation, 1A slo-blo for 230V operation.) |
| 2. All indicators normal, unit Charges, analog meter reads, Pulse seems to operate, but no pulse output and no indications on digital meters. | Check internal, 5A (30A in high-energy units) type FNM fuse F3. (Place unit on side and remove bottom cover to gain access.) |
| 3. All indicators normal, but unit will not Charge. Analog meter reads essentially zero, no pulse appears when Pulsed. | Check internal Variac 2A slo-blo input fuse F2. |
| 4. Illogical Charge, Pulse or digital readout operation. | Check all five, internal Regulator fuses. |
| 5. All functions normal, including Charge, Pulse and digital readouts; but peak open-circuit analog meter doesn't read, or reads erratically. | Possible failure of the meter itself. |
| 6. Circuit Interlock light won't go out; as a result, Charge/Pulse operations are inhibited. | A. Check all interlock requirements; with specific attention to the required Out Lo-Measure Lo connection, either at the front panel or at the circuit/device under test. (See section 1.4.4.)<br>B. If the Ext Adapter jack is in use to an external fixture or interlock, make sure the plug is fully inserted and that all connections are tight. Also make sure that the telephone plug itself is a Switchcraft Type 482 or equal. |

TABLE 4-5 (con't)

TROUBLE-SHOOTING CHART

| Symptom | Possible Cause or Procedure |
|---|---|
| | C. If a Model 210 auxiliary Energy Storage Unit is supposed to be used but has been disconnected, a "keeper" cable is required at the rear Model 424 connection before Charge and Pulse can take place with <u>any</u> Programmer (even if that Programmer doesn't require the Model 210). |
| | D. Same for Model 211 - Keeper required at rear of Model 210 if Model 211 disconnected. |
| | E. Keeper is in place as per (C) or (D) above, but the Programmer in use <u>requires</u> the missing Energy Storage Unit(s). |
| 7. Interlock light doesn't go on when <u>Out Lo</u> - <u>Measure Lo</u> connection is removed. | Check for ground loop via third wire on ac line. Remove auxiliary measuring instrumentation from Model 424 output and recheck -- see section 2.4.4. |
| 8. On 100V range, digital peak voltage display is much too low. (Current display is apparently all right.) | Follow Trouble-Shooting Procedure 1 using Fig. 3-10 and Input Ass'y Schematic 42-417-001. |
| 9. Failure of digital voltage display on both ranges, on 1kV range, or on 100V range but not by exactly 10:1. (Current display apparently all right.) | Follow Procedure 2, using Figs. 3-12 and 3-13. |

TABLE 4-5 (con't)

TROUBLE-SHOOTING CHART

| Symptom | Possible Cause or Procedure |
|---|---|
| 10. Failure of digital current display -- reading low by about 10:1 for Programmer Network current selections of 200A and up. (Voltage display apparently all right.) | Follow Procedure 3. |
| 11. Failure of digital current display on both ranges, or on 1kA range but not by exactly 10:1. (Voltage display apparently all right.) | Follow Procedure 2, substituting "Current" for "Voltage" Boards, inputs, etc. throughout the procedure. |

This page left blank intentionally.



(pages 4-65 through 4-68, following, omitted intentionally)

4.5.1 Procedure 1 - Digital voltage display reads low on 100V range:

The procedure is to see whether there has been a failure in the 10:1 range switching operation. If there has, the digital display will read low by a factor of almost exactly ten.

Step 1 - Set the peak open-circuit analog voltage meter to 1000V. Use 100V range: Measure Hi/Out Hi should be connected, as should Measure Lo/Out Lo. Using either polarity, operate Charge and Pulse Switches to generate an output. Check the 424 digital voltage output reading. If it is within a few volts of 100, there is an excellent chance that the x10 range relay in the Voltage Transducer Assembly is not being operated to obtain the 100V range.

Step 2 - Check for activation of the 100V range relay, located in the Voltage Transducer, by measuring the resistance between Measure Hi and Measure Lo, with Measure Hi and Out Hi disconnected; but with the Model 424 power switch ON.

CAUTION

Do NOT operate Charge or Pulse switches with an ohmmeter connected to the Measure terminals.

In 1kV range, the resistance should be 10K; in 100V range, approximately 1K.

Step 3 - If the reading is 10K on the 100V range, verify that the correct excitation voltage is reaching the relay coil. Put the Input Assembly on its extender cable, and measure the voltage at its output connector, J4-15,S; it should be 0V in 100V range, 60V in 1kV range.

Alternately, remove the Model 424 bottom cover. Then return the unit returned to its normal operating position. Slide it forward so that it overhangs the bench by 5-6 inches, exposing the Voltage Transducer coil terminals, bypassed via ceramic capacitors to the Transducer case. (The Transducer case is directly behind the unit's Output/Measure terminals.)

CAUTION

Do NOT operate Charge or Pulse at this time, as high-voltage connections are exposed.

Verify that +60 is applied to one terminal, and that the other switches between 0 and +60 as range is changed from 100V to 1kV.

Step 4 - If the coil voltages are correct, either the 1K resistor in the Transducer is open -- highly unlikely -- or else the Transducer relay has failed.

If the coil voltages are not correct, turn to the Input Assembly PC board (the small one outside the shield), and trace actuation of the circuitry on that board from its pin J4-N, to the front panel Voltage range switch that should actuate it -- +5 for 100V range.

4.4.2. Procedure 2 - Failure of peak voltage display:

This procedure is designed to determine whether the failure has occurred before, in or following the Preamps/ Peak Detector in the Input Assembly (J1).

Step 1 - Make sure Measure Hi/Out Hi, and Measure Lo/ Out Lo, connections are in place. Examine the V Monitor output on a scope during the pulse. If the voltage isn't correct, the trouble must lie before the Input Assembly. Trace the circuit back to the Measure Hi terminal (with the power off).

Step 2 - If the V Monitor output voltage in Step 1 is correct, determine whether the Input Assembly is the source of failure by measuring its output. This is most easily accomplished by examining the input to the Voltage Board, J2, at pin 6 or F. Place J2 on an extender to gain access to this point.

The peak detector holds its output after the pulse, and since the gain is 1, output scale factor is the same as input scale factor, as indicated by the front panel lights (200V/V or 20V/V for 1 kV and 100V ranges, respectively). In effect, 5V is full range for any range, including the 10 kV range supplied with Programmer Networks PN 261, 282 and so on.

However, the peak detector output at the Q8 drain (Fig. 3-12) is isolated by a resistor (R22, 10K) from the output terminal. (Without this isolation the peak detector may oscillate at rf -- beyone even a wideband scope's ability to see it -- as it usually also will if a scope probe is connected to it). Therefore the voltage at pin 4 will not be dc, since resistor R22 is really one half the total input resistance to comparator A2 (Fig. 3-13). The second half is R7 on Fig. 3-13, also 10K. The high-speec comparator is not an op amp, hence its (+) junction isn't a virtual ground. Therefore as the output ramp from integrator A1 rises, a portion of it will appear at the input on pins 6 and F. The wave at this point should therefore be as shown in Fig. 3-13, a negative step proportional to the peak detector output; with a scale factor of about 2/3 for the 1kV range, slightly over 1/2 for the 100V range. Ramp rate of rise measured at this

point should be about 100 mV/msec on the 1kV range, 50 mV/msec on the 100V range. (Integrator output is independent of range -- as measured on TP 4, it should be 465 mV/msec.)

Step 3 - If the V Monitor output voltage is correct (Step 1), but the Input Assembly output isn't (Step 2), then re-measure the Input Assembly input at the Input Assembly Voltage input Coax center terminal -- on the upper coaxial input connector to the shielded enclosure. (Put the Input Assembly on an extender. Operate it with the top or front shield cover open, by removing the four screws that secure it, and place it horizontally on an insulating board, directly above the rest of the cards. Do not disconnect the input coaxes or baluns.)

This page left blank intentionally.

## 5. Programmer Networks

Specific individual characteristics of the various Programmer Networks are given in this section, particularly when they are different from those described in section 3.4.1, and/or require terminations different from those listed in 2.4.5.

One characteristic is common for all Programmers: in order to obtain rated characteristics, the open-circuit voltage on the Model 424 must be set to the rated Programmer maximum peak voltage -- usually 1000 or 1500V; or to the fraction of that rated voltage dictated by the scaling ratio given on the Programmer front panel -- 2:1 for the PN 282, for example, with its 2500V maximum output voltage.

### 5.1 PN 241

Standard unit; use termination Model 485 or 486. May be used without termination if necessary, since the primary effect of the termination is to improve the early wave-start shape for voltage. Should obviously be used when testing lower-voltage devices which will be exposed to this wave-start area at an important portion of their characteristics.

### 5.2 PN 242

See PN 241, Section 5.1.

### 5.3 PN 243

Standard unit; use termination Model 485 or 486. Should not be used without termination since the 1.2 x 50 wave edge is so fast that it will be materially affected in terms of "cleanliness" of the wave, as well as risetime at the lower current (i.e., higher output resistance) settings.

At the higher current settings it is crucially important that the driven load be as close to the Model 424 terminals as possible, to insure getting a current waveshape with fast leading edge. At 500A, for example, the output resistance is 3 ohms; so that an inductance of only one uH will begin to dominate the current risetime. (L/R will be 1 uH/3 ohms or 0.33 usec. A 1.2 usec virtual front time implies a rise time of about 0.4 usec.)

If current risetime is considered important for the tests involved, either keep connections to an inch or two, or else use coax -- with high on the center conductor,

low on the braid, for both drive and measure pairs; and avoid drive/measure loop couplings at the load.

5.4 PN 244

See PN 241, Section 5.1.

5.5 PN 245

Obsolete -- replaced by PN 246, which carries the lowest rate-of-rise for the linear ramp down to 100 V/usec from the PN 245's low limit of 500 V/usec.

All information about termination etc. same as PN 246.

5.6 PN 246

Standard unit; use termination Model 485 or 486. Termination crucial to proper operation; both as to wave startup cleanliness, and regarding the actual rate-of-rise obtained for the linear ramp portion of the wave.

Specifically, the 485 and 486 terminations contain 0.0011 ufd capacitors; a change of 100 pf in capacitance gives an 8% change in the slope of the 10 kV/usec wave. Complete elimination of the termination yields waves with 25 to 30 kV/usec rates-of-rise. This characteristic can be useful in circumstances in which large-capacitance loads must be driven; omitting the termination with a 130V ac metal-oxide varistor provides essentially specified rates-of-rise, in view of the unit's approximately 0.001 mfd capacitance. Leaving the termination in place results in inability to reach the 10 kV/usec rate, and significant slope errors on 5 and 1 kV/usec. Clearly this kind of modification in application should only be undertaken with good oscilloscopic data to back it up. Consult factory for assistance when required.

Like the PN 243 (and really all of the Programmers for optimum performance), loads should be kept close and for even a six-inch run, coaxial.

Note that the actual wave generated is an underdamped step with exponential decay, shown in Figs. 2-13 (c) and (d); the 100 or 200 - to 1200 or 1400 volt portion of which is extremely linear, as shown in Figs. 2-13 (a) and (b). However, the peak will be higher than the so-called "plateau", reached after the ringing stops; hence for a 1500V open-circuit setting, the peak will be on the order of 1900 to 2000V, and will register off

scale -- actually over-range -- on the digital readout, if not clamped by a protector. Similarly, for a setting of 1000V, say, the peak open circuit will read on the order or 1300V, and so on.

As mentioned previously, settings less than those representing maximum -- as indicated on the front panel -- will result in erroneous results. In case of rate-of-rise Programmers, the error will not only lie in the open-circuit voltage peak and short-circuit current, but also in the slope of the wave, which will be proportionally lower than specifications.

## 5.7 PN 247

Same as PN 241; except since this Programmer supplies up to 2000A short-circuit current and the Model 424 can only read out to about 1600A with linearity on the digital display, a 2:1 attenuation for the current reading is provided.

Thus, PN 247 panel legend instructs to connect the coax connector mounted on it, via the cable supplied, to the Model 424 I Monitor coax. By this means the Model 424 readings are reduced by half for digital current readings. Thus all readings should be doubled to obtain true output current, as indicated on the PN 247 front panel adjacent to the coax connector provided there.

The 2:1 attenuation to guarantee operation within the linear range is obtained by simply shunting the I Monitor terminal with an approximately 50 ohm resistor, mounted within the PN 247 plug-in. This is preferable to mounting the shunt at the I Monitor connector itself, since in that event, it could be left in place erroneously for operation with other plug-in Programmer Networks, yielding incorrect current readings for them.

## 5.7A PN 247A

The PN 247A Programmer Network provides an extended version of PN 247 performance; specifically, 2500A instead of 2000A short-circuit current. The 8 x 20 short-circuit waveform is still furnished, with an undershoot on the order of 20% of peak. The open-circuit voltage wave is ‹4 x 40.

### 5.7A.1 Termination Model 489

Special operating instructions for the PN 247A include use of a termination network at the load different from the Model 485 or Model 486 used with most of the other Model 424 plug-in Programmers. The PN 247A requires use of special termination, Model 489, to obtain specified wave performance. It is supplied along with the PN 247A as standard equipment. (See Manual, section 2.4.5, for additional general information on terminations.)

### 5.7A.2 Current Monitoring

Since the Model 424 can only read out to about 1600A on the digital display, a 2:1 attentuation for the current readings is provided.

Thus, PN 247A panel legend instructs to connect the coax connector mounted on it, via the cable supplied, to the Model 424 I Monitor coax. By this means the Model 424 readings are reduced by half for digital current readings. Thus all readings should be doubled to obtain true output current, as indicated on the PN 247A front panel adjacent to the coax connector provided there. (The same 2:1 factor applies to go/no go settings; i.e., when set to 500A, for example, the go/no go crossover is actually at 1000 peak amperes.)

The 2:1 attenuation to guarantee operation within the linear monitoring range is obtained by simply shunting the I Monitor terminal with an approximately 50 ohm resistor, mounted within the PN 247A plug-in. This is preferable to mounting the shunt at the I Monitor connector itself, since in that event, it could be left in place erroneously for operation with other plug-in Programmer Networks, yielding incorrect current readings for them.

### 5.7A.3 Trimming for 2500A Full Scale (Schematic 42-430-120)

When the PN 247A is shipped after the Model 424 unit with which it will be used, in view of its extremely high current, there is a possibility that some additional trimming may be necessary to obtain a short-circuit current (at 1500V open-circuit) within a few per cent of 2500A. (But only execute this procedure if deemed absolutely necessary.)

NOTE

Even a few inches of wire can cause a significant reduction in short-circuit current. For trimming purposes, be sure to follow the output terminal wiring instructions of section 4.3.8. Be sure measurements are made in accordance with that section, before clipping or soldering as described in this section.

If the full-scale short-circuit current (with analog open-circuit voltage meter set to 1500V) is greater than 2500A, cut out the #16 UPPER jumper wire (NOT the lower one) in section A of "Rtrim" in the Programmer Network. (Remove the Programmer Network outer case via the two screws at the rear of the unit to gain access to the "Rtrim" jumpers.) Use the upper #16 wires in sections E, F and J successively, to reduce the short-circuit current as may be necessary. (The Programmer case MUST be restored and the two screws re-instated after each "trim", BEFORE plugging the Programmer back into the Model 424 EACH time a new trim is tried.)

Table I below lists approximate short-circuit current (SCI) changes (at 1500V open circuit) to be expected due to each jumper removal.

Table I

| Jumper | Approx SCI Change (Amperes) |
|---|---|
| A | -16 |
| E | -12 |
| F | -12 |
| J | -16 |

If the short-circuit current is less than 2500A, add a short jumper paralleling section C with B, and then successively H with G, D with C and I with H as may be required.

Table II below lists approximate short-circuit current (SCI) changes (at 1500V open circuit) to be expected due to each jumper addition.

Table II

| Jumper | Approx SCI Change (Amperes) |
|---|---|
| C with B | 12 |
| H with G | 12 |
| D with C | 12 |
| I with H | 12 |

After this final trim procedure, it should be unnecessary to make any future adjustments.

## 5.8 PN 248

Use Termination Model 485 or 486. May be used without termination under same circumstances as PN 241.

Waves specified differently from all other plug-ins except the PN 282. The first figure is the time to crest instead of virtual front duration -- see section 1.3. Waves are further different in that limit figures are used; i.e., less than 10 usec x greater than 160 usec, etc.

The PN 248, like all of the Programmers numbered between 241 and 251 (and some beyond), operates with grounded output and sensing for voltage. If it is desired to operate into active circuits, see section 2.9.5 and consult factory for suggestions regarding coupling and filter networks for specific applications.

## 5.9 PN 249

The PN 249 is quite different from any of the other Programmers: it combines high energy, using the Model 210 auxiliary Energy Storage Unit (for a total of 315 joules stored); it has a rather fast rise -- 4 usec -- and an extremely high current under short-circuit conditions, namely 1500A maximum. Other Programmers have these characteristics but singly; the PN 249 is the only one to combine them all.

As a result, for one thing the 249 utilizes a different termination -- the Model 487; and it is absolutely necessary for the specified PN 249 waveform. It incorporates a series 0.055 mfd capacitor (instead of the 0.0011 for the Models 485 and 486), with a 2.7 ohm rather than a 27 ohm series resistor.

In addition, as well as the reasonably short leads required to achieve the short-circuit current due to resistance limitations as with the PN 247, say, for 2 kA with an 8 x 20 wave, the PN 249 requires short leads or preferably coax as with the PN 243 because of the steeper front involved, for inductive reasons as well.

## 5.10 PN 250

See PN 241, Section 5.1.

## 5.11 PN 251

See PN 241; except the only wave supplied is 1 kV/usec for voltage, 10 x 1000 for current at 500A.

## 5.12 PN 252

See PN 241. Note that the leading edge specifications for both voltage and current for this Programmer Network are for 10-90% rise time, rather than virtual front duration. Thus, instead of A x B, the times are designated "A" x B where the quotation marks indicate the difference.

Use the standard termination, either Model 485 or Model 486, on the Model 424 output terminal array or at the load.

## 5.13 PN 253

### 5.13.1 General Information

The Model PN 253 Programmer Network supplies 100 kV/usec leading edge surge capability for the Model 424 Surge Generator/Monitor.

The PN 253 was designed specifically to simulate some of the effects of EMP, or Electro-Magnetic Pulse; as well as the induced effects of close-proximity lightning strikes. It meets IEEE Specification 465.1-1977 for testing gas-tubes at higher rates-of-rise.

The Programmer Network features five selections for impulse duration, ranging from 20 to 1000 usec decay times for the open-circuit voltage wave, and from 20 to 320 usec for the short-circuit current wave.

Maximum delivered energy, which along with leading-edge speed is a major parameter in circuit failure-mode simulation and analysis, varies with wave duration from approximately 1 joule to almost 20 joules, corresponding with the 20 to 1000 usec decay-time selection. Duplication of actual equipment failure modes can thus be carried out by surging under carefully controlled and quantified laboratory conditions.

Peak voltage monitoring at the high rates involved is best accomplished by using a suitable oscilloscope, measuring directly at the driven load. Peak current monitoring, even with the PN 253, is built into the Model 424 current monitoring circuits; providing both digital and go/no go displays.

### 5.13.2 Specifications

| | |
|---|---|
| Output | linear ramp, overshoot and ring, exponential decay. (Modified exponential and 20% undershoot for 20 usec decay selection.) |
| Leading Edge | 100 kV/usec ± 20%. (Adjustable to any desired accuracy, with oscilloscope in use being the only limitation, via the Model 424 Set Voltage control.) |
| Amplitude | 0-2000 V maximum, 0=1500 V plateau |

| | |
|---|---|
| Decay: Front-Panel Selectable | |
| Open-circuit Voltage | 20, 50, 100, 500, 1000 usec |
| Short-circuit current | 20, 40, 60, 240, 320 usec |
| Polarity | + and - polarity impulses. Set by Charge polarity on Model 424. |
| Short-circuit current | 0-150A peak, less than 1 usec virtual front duration |
| Output termination Model 490 | included with the PN 253. Supplied with two-foot length of cable, terminated in network with two 5-way binding posts. |
| Monitor facilities | built-in monitoring for delivered peak current in the Model 424, with both digital and go/no go displays. |

5.13.3 Operating Instructions

The PN 253 generates an extremely fast wave; at 100 kV/usec, Model 424 output reaches 1 kV in only 10 nsec. It is therfore critical that high-frequency techniques be used in connecting the wave output to the load it drives, and in making any oscilloscope measurements. (The Model 424 voltage measuring circuits are not available for use with the PN 253; the digital voltage display will read zero, and if the 1 kV range has been selected, the under-range light will blink alternately with the display.)

1. Use Termination Model 490 on the Model 424 output terminal array. It includes about a two-foot coax cable terminated in a small network box with 5-way binding posts. Take the wave from the binding posts. Do not add any additional termination on these binding posts.

2. With almost any scope, a balun will be required in order not to see high-frequency ringing on the wavefront. (See section 2.9.1.)

5.14 PN 254 Same as PN 241, Section 5.1

5.15 PN 255 Same as PN 243, Section 5.3

5.21 PN 261

5.21.1 General Information

The PN 261, operating in conjunction with the basic KeyTek Model 424 Surge Generator/Monitor, generates a decaying oscillatory or "ring" wave, required for simulation of switching transients characteristic of those found on many industrial and residential ac power lines. As but one example, it meets specifications for the UL tests required for Ground Fault Circuit Interrupters. It does so at peak voltages of up to 6 kV, set by adjusting the peak open-circuit voltage meter on the Model 424 to one-fourth the desired output value. Its output impedance is 50 ohms in parallel with approximately 50 uH, designed to equal the characteristic low-voltage power line impedance at the surge frequencies. Thus short-circuit surge current is 200A.

The PN 261 output is ac-coupled, so that it may be directly connected in shunt with the ac line for one- or three-phase normal- or common-mode surging. External ac-line filters to protect the unsurged line are necessary, but are of minor size and cost in view of the relatively high frequency of the oscillatory surge the PN 261 provides. Use of the external components is only a small inconvenience in exchange of the complete connection flexibility it provides for normal- or common-mode surging for any power line configuration to 330V.

All-important isolated peak voltage and current measurements are also provided. The current sensing and coupling to Model 424 output circuits are built into the PN 261 itself. Resulting current readings are direct.

For voltage, sensing is included again on an isolated basis, and coupling to the Model 424 measurement circuits requires merely connecting a short coax cable , supplied with the PN 261, between an auxiliary PN 261 output and the Model 424 V Monitor connector. Use of termination Model 488 as specified on the Model 424 output terminal array, provides a 10 kV range decimal point when the Model 424 1 kV range is selected; hence measured peak output voltages also read directly on the digital display, in kilovolts; as well as in go/no go form on the Model 424 front panel. An appropriate decimal point indication is also furnished remote equipment when Programmable/Readout Option P is supplied.

The Model PN 261 output is made available directly via a multi-pin, high-voltage front panel connector. Included as outputs on the same connector are interlock connections, chassis ground and an auxiliary pulse command (switch closure) input, to permit pulse generation from a remote location.

5.21.2 Specifications

| | |
|---|---|
| Output | ac wave, exponential decay |
| Frequency | 100 kHz |
| Leading edge | 0.5 usec risetime (essentially 10 kV/usec rate-of-rise at full 6 kV peak output setting) |
| Amplitude control | 4 times Model 424 analog peak voltage setting |
| Amplitude | 0 to 6 kV first peak, corresponding with 0 to 1.5 kV setting on the Model 424 peak meter, controlled by Set Voltage knob |
| Decay | 40% each succeeding peak (64% each cycle) |
| Polarity | + or - first peak, set by Charge polarity on Model 424 |
| Output impedance | 50 ohms $\pm$ 20% in parallel with 50 uH |
| Coupling | capacitative, to permit connection to any power line up to 330V |
| Output current | 60A nominal at the 50 ohm impedance level typical of ac lines; 200A nominal, short-circuit current |
| Isolation | fully floating output |
| Output cable | included with PN 261, mating with front panel connector: 3 foot length, unterminated |
| Auxiliary connections | on same cable:<br>1. Interlock<br>2. Chassis Ground<br>3. Auxiliary pulse input (switch closure) |

| | |
|---|---|
| Monitor facilities | built-in, direct-reading digital monitoring for delivered peak voltage and current, fully isolated from the ac line or other circuit to which the PN 261 floating output may be connected |

5.21.3 Operating Instructions

1. Remove all links EXCEPT the Chassis Ground - Measure Lo link from the Model 424 output terminal array. Install KeyTek Termination Model 488, supplied with the PN 261, on these terminals.

2. Connect the short coax cable, also supplied with the PN 261, between the coax connector designated "Connect to V Monitor" on the 261 front panel, and the Model 424 V Monitor connector.

3. If the PN 261 is not being used in conjunction with an auxiliary interlock system, connect together the two wires at the end of the 3' cable (supplied), designated "interlock" (pins 1 and 2 on the multi-pin high-voltage connector on the 261 front panel, J261-1). Note: the cable is shipped with these two leads tied together and sleeved.

4. If the PN 261 is not being remotely pulsed, insulate the two pulse wires (Pulse Return, Pulse In), pins 5 and 6 on the J261-1 connector respectively. Note: again, the cable is shipped in this condition.

5. Connect the out high and low wires to the equipment to be surged. Out high is pin 7, out low is pin 4 on J261-1. They are marked as shipped. No damage will result if high and low are interchanged; but the Model 424 controls and output displays indicate the polarity of the high with respect to the low.

6. Connect the chassis ground wire -- pin 3 on J261-1 -- to the chassis of the device being surged. NOTE: Model 424 chassis is connected to the 'third wire' or ground on its input ac line, as per common good practice; and should not be "cheated".



(pages 5-13 through 5-16, following, omitted intentionally)

5.21.4 Theory of Operation

The Model PN 261 is different in several ways from many of the other Model 424 Programmer Networks.

1. It provides an oscillatory surge rather than a unidirectional impulse.

2. It uses a transformer to step the voltage peak up to over 6 kV.

3. Its output is ac-coupled, permitting direct ac power line drive, and use with other active circuits.

4. Voltage monitoring for peak output surge is floating with respect to the Model 424 ground system; via a current transformer. This allows monitoring the pulses delivered, even though they are riding on rather high potentials off ground.

5. Output current monitoring is likewise floating via another current transformer, permitting the same flexibility in peak current measurements.

The PN 261 schematic, given in the schematic section for those installations it accompanies, is No. 42-430-011. The Model 424 built-in 25 mfd surge capacitor supplies 4:1 stepup transformer T1, via capacitors C1 and C2 in the Programmer. The wave is further shaped on the secondary by C3 through C10, plus R3 and R4. C11 (with R5) supplies ac coupling to the output.

The low end of the T1 secondary supplies series 1:1 current transformer T2, whose secondary drives what are for the other Programmers, the normal Out Hi - Out Lo Programmer output terminals (J6-8 and J6-4, respectively). In this application, they are shorted via the internal Model 424 Current Transducer (see section 3.7), by means of the Model 488 termination on the 424's output terminalarray. By this method, the "ungrounded current sensed by transformer T2 is translated to the "grounded" current transformer -- and measuring circuitry -- in the Model 424. Gas tube E1 in the Programmer, across the secondary of T2, protects against excessive voltage in the event the Out Hi - Out Lo short is not in place or inadvertently opens.

Voltage monitoring is accomplished by measuring the current flowing in resistor R6 (shunted by R8), ac-coupled across the output via capacitor C12. Current transformer T3 performs the current-to-voltage transformation. Its output is connected to otherwise floating coax output connector J261-2 on the front panel. This is connected via external cable to the Model 424 V Monitor coax, now used as an input rather than an output. (Monitoring can be accomplished nonetheless if desired, via a coax Tee.) The current transformer load is the 50-ohm terminating impedance of the V Monitor circuit (see section 3.6); fround for the entire monitoring circuit derives from circuit ground via the V Monitor coax shell.

This page left blank intentionally.

## 5.41 PN 281

### 5.41.1 General Information

The PN 281, operating in conjunction with the basic KeyTek Model 424 Surge Generator/Monitor, generates a decaying oscillatory or "ring" wave, required for simulation of switching transients characteristic of those found on many industrial and residential ac power lines. As but one example, it meets specifications for the UL tests required for Ground Fault Circuit Interrupters. It does so at peak voltages of up to 6 kV, set by adjusting the peak open-circuit voltage meter on the Model 424. (On units without the red, 7.5 kV scale, set to one-fourth the desired output voltage.)

PN 281 output impedance is 50 ohms in parallel with approximately 50 uH, designed to equal the characteristic low-voltage power line impedance at the surge frequencies. Thus resulting short-circuit surge current is 200A.

Fully built-in facilities are supplied for driving the ac line in shunt mode. These include a pulse isolation transformer, so that the basic Model 424 surge generation circuitry can remain grounded for reasons of safety, while the output pulse "floats" at the potential of the surged ac line. Also included is an ac input line isolation filter, to permit using other equipment on the line without having it receive high surges at the same time.

All-important isolated peak voltage and current measurements are also provided. The current sensing and coupling to the Model 424 output measure circuits are built into the PN 281 itself. Resulting current readings are direct.

For voltage, isolated sensing is also included, and coupling to the Model 424 measurement circuits requires merely connecting a short coax cable, supplied with the PN 281, between an auxiliary PN 281 output and the Model 424 V Monitor connector on the front panel. Use of Termination Model 488 as specified, on the Model 424 output terminal array, provides a 10 kV range decimal point when the Model 424 1 kV range is selected; hence measured peak output voltages also read directly on the digital display, in kilovolts; as well as in go/no go form on the Model 424 panel. An appropriate decimal point indication is also furnished remote equipment when Programmable/Readout Option P is supplied.

The Model PN 281 Programmer Network is designed to operate as a plug-in with the KeyTek Model 424 Surge Gen-

erator/Monitor. Unlike many of the other Programmer Networks, however, when fully inserted it extends approximately five inches in front of the Model 424 front panel. This extension not only permits mounting the somewhat larger internal components required, it is also crucial to allowing convenient ac line input and output connections. These are available at the left and right sides of the extension of the Programmer, for the isolated, auxiliary 115/220V line and the surged output line, respectively.

5.41.2 Specifications

5.41.2.1 Surge Wave

| | |
|---|---|
| Output | ac wave, exponential decay, superimposed on separate ac input |
| Frequency | 100 kHz |
| Leading edge | 0.5 usec rise time (essentially 10 kV/usec rate-of-rise) |
| Open-circuit voltage | 0 to 6 kV first peak, controlled by Set Voltage knob |
| Decay | 40% each succeeding peak |
| Polarity | + or - first peak, set by Charge polarity on the Model 424 |
| Output impedance | 50 ohms ± 20%, in parallel with approximately 50 uH |
| Output current | approx. 60 A at the 50 ohm level typical of ac lines. (15 to 20 A drawn by line filter internal to PN 281 even at no load). Short-circuit pulse current, 200A |
| Isolation | fully floating output |
| Surge mode | normal mode, or line-to-line (also known as transverse or metallic) |

5.41.2.2 Ac Input/Output

| | |
|---|---|
| Frequency | 50/60 Hz, auxiliary input line, independent of Model 424 ac input line |
| Continuous | 115 or 220V, 10A, no switch selection required. (Cable supplied only for 115V) |
| Intermittent | 115 or 220V, 15A (30% duty cycle max., with max. of 30 seconds period) |
| Loading | 4 mfd capacitance line-to-line, plus 4 mfd capacitance each line to ground |

5.41.2.3 Dc Input/Output

| | |
|---|---|
| Voltage | up to 250V (dc + peak ac) in place of straight ac input |

5.41.2.4 Other Features

| | |
|---|---|
| Protection | 15A front panel circuit breaker |
| Monitoring | built-in monitoring for delivered peak voltage and current, fully isolated from the ac line or other output circuit. Uses digital and go/no go displays on basic Model 424 |

5.41.3 Operating Instructions

1. Insert plug-in Programmer Network PN 281 into the Model 424 mainframe. As it protrudes about five inches in front of the Model 424, make sure there is bench support (or, in the rack-mount application, shelf support) under the entire protruding portion, as a good deal of the plug-in's weight is located in this front section.

2. Once it has been verified that the printed-circuit connectors are fully "made" at the back of the Programmer, lock it into place by pushing the latch located at the left of the plug-in into the vertical position, designate "Lock".

3. Remove all links EXCEPT the Chassis Ground - Measure Lo link from the Model 424 output terminal array. Install KeyTek Termination Model 488, supplied with the PN 281, on these terminals.

4. Connect the short coax cable, supplied with the PN 281, between the coax connector designated "Connect to V Monitor" and the Model 424 V Monitor connector.

5. With the PN 281 circuit breaker OFF, connect the ac heavy-duty twist-lock connector-terminated cable, AC LINE AND FIRST. (This cable is supplied with the PN 281.) Then connect the twist-lock jack end of the cable to the PN 281 left-side plug identified as AC INPUT LINE.

   For 220V operation, an appropriate adapter must be supplied by the user at the ac input cable end.

WARNING

It is important that the ac plug end of the cable be connected BEFORE the twist-lock jack is connected at the left side of the PN 281. Otherwise, if the PN 281 breaker were left ON, and the output surge generated, the small residual pulses fed back past the PN 281 line filter would appear on the open ac plug terminals.

6. Connect the ac input line supplying the device being surged to the PN 281 right-side output receptacle, identified as SURGED AC LINE.***

WARNING

Conventional ac input cord to the device being surged is NOT generally rated for the 6000V peak that the PN 281 can apply. Hence it should be insulated from both personnel and equipment during test.

The reason it is used for this test, and the reason the PN 281 output is a (high-voltage-tested) ac receptacle, is specifically to permit realistically surging a device or system including its line cord, to simulate the conditions actually to be encountered in the field as a result of induced lightning and other transients.

THEREFORE USE ISOLATION AND EXTRA INSULATION AROUND THE LINE CORD SINCE IT IS NOT DESIGNED FOR CONTACT WITH PERSONNEL OR EQUIPMENT (INCLUDING BENCHES) WHILE BEING SURGED.

SURGE POTENTIALS CAN BE DANGEROUS TO BOTH PERSONNEL AND EQUIPMENT.

*** When the T451 Test Fixture is in use, connect the multi-pin connector on the right side of the PN 281 to the left rear connector on the T451 via cable supplied. Use an MSP-3 Termination on the left front connector on the T451.

7. Set the peak open circuit voltage on the Model 424 to the desired output peak.* Set Model 424 voltage range to 1 kV. Measured peak output will read directly in kilovolts, to a maximum of 6.0 kV, on the Model 424 digital display.

* Set to one-quarter the desired peak on units without red, 6 kV or 7.5 kV analog meter scales.

NOTE: If a partial breakdown occurs in the equipment under test as a result of application of the high voltage surge potential from the PN 281, resonance and or corona effects can result in higher peak voltages (usually with a quality of "hash" when viewed on an oscilloscope) than the generate peak. Thus, peak voltages as high as ten or eleven kV can be and have been registered on the Model 424 peak detector outputs. These are real, and verifiable with oscilloscope observation (with a fast-enough scope -- preferably several hundred megaHertz).

8. For short-circuit current testing, disconnect the auxiliary ac input line from the left-side plug on the front portion of the PN 281.

   (The input line need not be disconnected for short testing, it is sufficient merely to set the ac input circuit breaker to "OFF". But there is less chance of inadvertently stressing the breaker via a dead short if the line is completely disconnected. The breaker is designed to take the short, but there is no point in stressing the device gratuitously.)

   Even a clip lead will cause hundreds of volts drop in short circuit mode, and will be measured and displayed as such by the Model 424 peak digital voltmeter, in view of the high current and steep front involved.

9. Driven loads will load the pulse, in some cases, quite severely. A 10A resistive load at 120V is 12 ohms; when driven by the PN 281 with its 30 to 50 ohm output impedance, this will cause a drop to about 25% of open-circuit pulse amplitude! Heavy capacitance loads can cause still higher losses.

   This loading effect has been fully anticipated by the specifying agencies that call for the ring-wave test; it is seen as simulating the field situation in which more-heavily loaded lines are often subject to lower-value transients. If specific applications call for high-level transients to be delivered to lower impedance loads, other Programmer Networks such

as the PN 282, with its 2.5 ohm output impedance, should be given consideration as additional sources for surge testing.

10. IMPORTANT: The following is a normal condition for the Model PN 281 --

    A Model 424 peak current reading of from 40 to 50A is normal, for no load or connections to the PN 281 SURGED AC LINE connector on the right side of the unit. This results from the current drawn by the internal ac line filter.

11. Do not exceed the ac current ratings of 10A continuous or 15A intermittent (30% duty cycle, 30-second period); or else excessive heating and permanent damage may occur to the unit.

12. Surge testing can be carried out both with and without connection to the auxiliary ac input line. For the un-powered surge application, merely leave the AC INPUT LINE connector disconnected; or equally effective, leave it connected but switch the PN 281 circuit breaker to the off position.

    WARNING

    Whenever the AC INPUT LINE connector is disconnected, remove it from the PN 281 end first. Do NOT leave it connected at the PN 281 and disconnected at the power plug end. (See similar warning under item (5) above.)

13. If it is desired to use the PN 281 pulse output for an application other than longitudinal ac line surging -- say for common-mode surging, telecommunications line work and so on -- merely disconnect the AC INPUT LINE (remembering to either disconnect at the power plug end, or to switch the front panel breaker OFF and keep it OFF, or both), and use the SURGED AC LINE output as a straight pulse source, EXCEPT:

    NOTE

    Do NOT surge systems with dc voltages higher than 250V dc + peak ac, without coupling via a suitable auxiliary surge capacitor. The ac-line filter in the Model PN 281 contains capacitors

that are not rated for operation at dc + peak ac voltages higher than 250V, and they will still be in the circuit even if the ac line is disconnected and the breaker is off, unless the auxiliary coupling capacitor is employed. (Consult factory for additional information on surging dc lines at higher voltage levels, suitable decouplings to protect un-surged loads on the same lines and so forth.)

WARNING

OBSERVE THE SAFETY WARNING UNDER ITEMS 6 AND 12 ABOVE IF USING AC LINE CORD TO CARRY 6000V PEAK SURGES. If much of this work is to be done, a suitable high-voltage cable should be constructed, or procured from the factory.

Auxiliary filter networks to isolate the surge from the driving lines will also be necessary for this situation, and should be tailored by the user for the specific application. Consult factory for suggestions and assistance, particularly with regard to component ratings and potential component stress hazards within the Model PN 281 in applications different from the ac-line-driving one it was designed to fulfill on a turn-key basis.

14. Use the Model 424 Charge (+) or Charge (-) and Pulse switches, in normal sequence.

5.41.4 Theory of Operation

The Model PN 281 is different in several respects from many of the other Model 424 Programmer Networks.

1. It provides an oscillatory surge rather than a unidirectional impulse.

2. It uses a transformer to step the voltage peak up to over 6 kV.

3. Its output is ac-coupled, permitting direct ac power line drive, and use with other active circuits.

4. Voltage monitoring for peak output surge is floating with respect to the Model 424 ground system; via a current transformer. This allows monitoring the pulses delivered, even though they are superimposed on rather high potentials off ground.

5. Output current monitoring is likewise floating via another current transformer, permitting the same flexibility in peak current measurements.

6. The ac line-driving filter necessary to reduce the surge to manageable proportions on the unsurged side of the line, is built in; as are an auxiliary ac input plug and surged ac output receptacle.

The PN 281 schematic, given in the schematic section for those installations it accompanies, is No. 28-110-001. The Model 424 built-in 25 mfd surge capacitor supplies step-up transformer T1, via capacitor C1 in the Programmer. The wave is further shaped on the secondary by C3 through C10, plus R3 and R4. C11 (with R5) supplies ac coupling to the output.

The low end of the T1 secondary supplies series, 1:1 current transformer T2, whose secondary drives what are for the other Programmers, the normal Out Hi - Out Lo Programmer output terminals (J6-8 and J6-4, respectively). In this application, they are shorted via the intermal Model 424 Current Transducer (see section 3.7), by means of the Model 488 termination on the 424"s output terminal array. By this method, the "ungrounded" current sensed by transformer T2 is translated to the "grounded" current transformer -- and measuring circuitry -- in the Model 424.

Gas tube E1 in the Programmer, across the secondary of T2, protects against excessive voltage in the event the Out Hi-Out Lo short is not in place or inadvertently opens.

Voltage monitoring is accomplished by measuring the current flowing in resistor R6 (shunted by R8), ac-coupled across the output via capacitor C12. Current transformer T3 performs the current-to-voltage transformation. Its output is connected to otherwise floating coax output connector J281-2 on the side of the PN 281's front protrusion. This is connected via external cable to the Model 424 V Monitor coax, now used as an input rather than an output. (Monitoring can be accomplished nonetheless if desired, via a coax Tee.) The current transformer load is the 50-ohm terminating impedance of the V Monitor circuit (see section 3.6); ground for the entire monitoring circuit derives from the circuit ground on the V Monitor coax shell.

This page left blank intentionally.

## 5.42 PN 282

### 5.42.1 General Information

The PN 282, along with the basic Model 424, generates the $\langle \overline{2} \text{ X} \rangle 10$ voltage wave required for longitudinal (normal mode) surging of the ac power line for many specifications; in particular, to meet requirements of FCC Docket 19528, Part 68. It does so at a peak voltage of up to 2500V, set by adjusting the peak open circuit voltage meter on the Model 424 to one-half the desired output value. It generates a short-circuit current of over 1000A.

Fully built-in facilities are supplied for driving the ac line in shunt mode. These include a pulse isolation transformer, so that the basic Model 424 surge generation circuitry can remain grounded for reasons of safety, while the output pulse "floats" at the potential of the surged ac line. Also included is an ac input line isolation filter, to permit using other equipment on the line without having it receive high surges at the same time.

All-important isolated peak voltage and current measurements are also provided. The current sensing and coupling to Model 424 output circuits are built into the PN 282 itself. Resulting current readings are direct, to over 1500A.

For voltage, isolated sensing is included, and coupling to the Model 424 measurement circuits requires merely connecting a short coax cable, supplied with the PN 282, between an auxiliary PN 282 output and the Model 424 V Monitor connector. Use of termination Model 488 as specified, on the Model 424 output terminal array, provides a 10 kV range decimal point when the Model 424 1 kV range is selected; hence measured peak output voltages also read directly on the digital display, in kilovolts; as well as in go/no go form on the Model 424 panel. An appropriate decimal point indication is also furnished remote equipment when Programmable/Readout Option P is supplied.

The Model PN 282 Programmer Network is designed to operate as a plug-in with the KeyTek Model 424 Surge Generator/Monitor. Unlike many of the other Programmer Networks, however, when fully inserted it extends approximately five inches in front of the Model 424 front panel.

This extension not only permits mounting the somewhat larger internal components required, it is also crucial to allowing convenient ac line input and output connections. These are available at the left and right sides of the extension of the Programmer, for the isolated, auxiliary 115/220V line and the surged output line, respectively.

5.42.2 Specifications

| | |
|---|---|
| Output | <2 X >10* voltage wave superimposed on separate, auxiliary ac input that is independent of the ac that supplies the Model 424. |
| Timing | 2 usec max., start to crest<br>10 usec min., decay from start to 1/2 crest |
| Amplitude | 0-2500V peak, set via peak open-circuit voltage control on Model 424.<br>Output peak is 2x setting, and reads as 0-2.5 kV directly on the digital display.<br>Overshoot 15 to 20% on return to zero baseline. |
| Current | 1000A peak short-circuit, min.; optionally, up to 1400A. Defined for short applied directly at output. (Do not connect input ac line for this test, or else it too will be shorted.)<br>Overshoot approx. 40% on return to zero baseline. |
| Impedance | approx 2.5 ohms in series with 7 uH. (Determines timing for short-circuit current: approx. 4 usec risetime, 10 usec min. decay from start to 1/2 crest.) |

---

* The designation "2 X 10" or "<2 X >10" is convenient but not really correct, as the "2" in question is time to crest as defined for the PN 282, rather than virtual front time. See section 1.3 for greater detail. 2 indicates that the figure is time to crest.

| | |
|---|---|
| AC input/output | 50/60 Hz, independent of Model 424 ac input line. Unit includes ac line filter to reduce the surge on the un-surged side of the line; plus auxiliary (un-surged) ac input plug (220V, 15A); and (surged) ac output receptacle (115V, 15A). |
| Continuous | 115 or 220V, 10A. (Cable supplied only for 115V). |
| Intermittent | 115 or 220V, 15A (30% duty cycle, max., with max. of 30 second period). |
| Loading | 30 ufd capacitance |
| Feedback surge | 180V peak max., on filtered auxiliary input line. |
| Input/output difference | 6V max., at 10A. |
| Monitor facilities | Built-in monitoring for delivered peak voltage and current, fully isolated from the ac line or other active circuit to which the PN 282 floating output may be connected. (Termination Model 488 required on Model 424 output terminal array). |
| Voltage range | 10 kV, with 10V resolution; with Model 424 range switch set to 1 kV. |
| Current range | 1000A, with 1A resolution; over-ranging to 1600A. |

5.42.3 Operating Instructions

1. Insert plug-in Programmer Network PN 282 into the Model 424 mainframe. As it protrudes about five inches in front of the Model 424, make sure there is bench support under the entire protruding portion, as most of the plug-in's weight is located in this front section.

2. Once it has been verified that the printed-circuit connectors are fully "made" at the back of the Programmer, lock it into place by pushing the latch located at the left of the plug-in into the vertical position, designated "Lock".

3. Remove all links EXCEPT the Chassis Ground - Measure Lo link from the Model 424 output terminal array. Install KeyTek Termination Model 488, supplied with the PN 282, on these terminals.

4. Connect the short coax cable, supplied with the PN 282, between the coax connector designated "Connect to V Monitor" and the Model 424 V Monitor connector.

5. With the PN 282 circuit breaker OFF, connect the ac heavy-duty twist-lock connector-terminated cable, AC LINE END FIRST. (This cable is supplied with the PN 282). Then connect the twist-lock jack end of the cable to the PN 282 left-side plug identified as AC INPUT LINE.

   For 220V operation, an appropriate adapter must be supplied by the user at the ac input cable end.

WARNING

It is important that the ac plug end of the cable be connected BEFORE the twist-lock jack is connected at the left side of the PN 282. Otherwise, if the PN282 breaker were left ON, and the output surge generated, the small residual pulses fed back past the PN 282 line filter would appear on the open ac plug terminals.

6. Connect the ac input line supplying the device being surged to the PN 282 right-side output receptacle, identified as SURGED AC LINE.

WARNING

Conventional ac input line cord to the device being surged is NOT generally rated for the 2500V peak that the PN 282 can apply. Hence it should be insulated from both personnel and equipment during test.

The reason it is used for this test, and the reason the PN 282 output is a (high-voltage-tested) ac receptacle, is specifically to permit realistically surging a device or system including its line cord, to simulate the conditions actually to be encountered in the field as a result of induced lightning.

THEREFORE USE ISOLATION AND EXTRA INSULATION AROUND THE CORD SINCE IT IS NOT DESIGNED FOR CONTACT WITH PERSONNEL OR EQUIPMENT (INCLUDING BENCHES) WHILE BEING SURGED.

SURGE POTENTIALS CAN BE DANGEROUS TO BOTH PERSONNEL AND EQUIPMENT.

7. Set the peak open circuit voltage on the Model 424 to what is the desired output peak.* Set Model 424 voltage range to 1 kV. Measured peak output will read directly in kilovolts, to a maximum of 2.5 kV, on the Model 424 digital display.

8. For short-circuit current testing, disconnect the auxiliary ac input line from the left-side plug on the front portion of the PN 282. The short must be applied with 1/2" to 1" of lead, maximum, on the surged ac line output receptacle. (The input line need not be disconnected for short testing, the breaker need merely be set to OFF. But there is less chance of inadvertently stressing the breaker via a dead short if the line is completely disconnected. The breaker <u>is</u> designed to take the short, but there is no point in stressing the device gratuitously.)

* Set to one-half the desired peak, using the black 1500V scale, on units without a 3kV analog meter scale. (For example, set to 1250V to generate 2500V peak.)

Even a clip lead will cause hundreds of volts drop, and will be measured and displayed as such by the Model 424 peak digital voltmeter, in view of the high current and steep front involved.

9. Driven loads will load the pulse. A 10A resistive load at 120V is 12 ohms; when driven by the PN 282 with 2.5 ohm output impedance (2500V/1000A), this will cause about a 15% drop in pulse amplitude. Heavy capacitance loads can cause still higher losses.

10. IMPORTANT; The following are normal conditions for the Model PN 282:

    A. A slight buzz may occur when the auxiliary ac input line is connected and the PN 282 circuit breaker is on. It results from the high-value 220V ac capacitors used at 115V; it is normal and has no negative implications for reliability.

    B. The sharp noise that can occur on pulsing at the higher voltages is also normal. It results from the forces involved in the high currents that flow in the transformer, further closing the already clamped gap in its core.

    C. A Model 424 peak current reading of from 130 to 170A is normal, for no load or connections to the PN 282 SURGED AC LINE connector on the right side of the unit. This results from the current drawn by the internal ac line filter.

11. Do not exceed the ac current ratings of 10A continuous or 15A intermittent (30% duty cycle, 30-second period); or else excessive heating and potential damage may occur to the unit.

12. Surge testing can be carried out both with and without connection to the auxiliary ac input line. For the un-powered surge application, merely leave the AC INPUT LINE connector disconnected; or equally effective, leave it connected but switch the PN 282 circuit breaker to the OFF position.

WARNING

Whenever the AC INPUT LINE connector is disconnected, remove it from the PN 282 end first. Do NOT leave it connected at the PN 282 and disconnected at the power plug end. (See similar warning under item (5) above.)

13. If it is desired to use the PN 282 pulse output for an application other than longitudinal ac line surging -- say for common-mode surging, telecommunications line work and so on -- merely disconnect the AC INPUT LINE (remembering to either disconnect at the power plug end, or to switch the front panel breaker OFF and keep it OFF, or both), and use the SURGED AC LINE output as a straight pulse source, EXCEPT:

NOTE

Do NOT surge systems with dc voltages higher than 250V (dc + peak ac) without coupling via a suitable surge capacitor. The ac-line filter in the Model 424 PN 282 contains capacitors that are not rated for operation at (dc + peak ac) voltages higher than 250V, and they will still be in the circuit even if the ac line is disconnected and the breaker off. (Consult factory for additional information on surging dc lines at higher voltage levels.)

WARNING

OBSERVE THE SAFETY WARNING UNDER ITEMS 6 AND 12 ABOVE IF USING AC LINE CORD TO CARRY 2500V PEAK SURGES.

Auxiliary filter networks to isolate the surge from the driving lines will also be necessary for this situation, and should be tailored by the user for the specific application. Consult factory for suggestions and assistance, particularly with regard to component ratings and potential component stress hazards within the Model PN 282

in applications different from the ac-line-driving one it was designed to fulfill on a turnkey basis.

14. Use the Model 424 Charge (+) or Charge (-) and Pulse switches in normal sequence.

5.42.4 Theory of Operation

The Model PN 282 is different in several respects from many of the other Model 424 Programmer Networks.

1. It uses a transformer to step the voltage peak up -- to over 2500V.

2. Its output is ac-coupled, permitting direct ac power-line driving.

3. The ac line-driving filter necessary to reduce the surge to manageable proportions on the un-surged side of the line, is built in; as are an auxiliary ac input plug and surged ac output receptacle.

4. Voltage monitoring for peak output surge is floating, via a current transformer; to allow grounded measurement within the Model 424 itself.

5. Output current monitoring is likewise floating, via another current transformer, for the same basic reasons.

The PN 282 schematic, given in the schematic section for those installations it accompanies, is No. 28-210-001. The Model 424 built-in 25 mfd surge capacitor supplies 2:1 stepup transformer T1, across whose primary is a resistance of two ohms (R1 and R2 in series in earlier models, R1 alone in later ones). The wave is further shaped on the secondary by R3, L2, R4 and C1; and applied to series coupling capacitor C2, a 10 mfd high-voltage unit. It is shunted by R5 and R6 for safety purposes -- to insure discharge when disconnected.

The low end of the T1 secondary supplies 1:1 current transformer T2 on its way to the Out Lo connection on the surged ac line receptacle. The T2 secondary drives what are for other Programmers, the normal Out Hi - Out Lo terminals (J6-8 and J6-4 respectively), on the Programmer output connector. In this application, they are shorted via the internal Model 424 Current Transducer (see section 3.7). This is accomplished by means of termination Model 488 used with the PN 282, on the Model 424 front panel output terminal array. By this method, the "ungrounded" current sensed by transformer T2 is translated to the "grounded" current transformer -- and measuring circuitry -- in the Model 424. Gas tube E1 prevents excessive voltage across

the T2 secondary in the event the Out Hi - Out Lo short is not in place or inadvertently opens.

The high end of the T1 transformer output, after coupling via C2, drives the high terminal on the (surged) output ac line receptacle J282-3; the low terminal is driven via T2 as described.

Input plug P282-1 supplies auxiliary (un-surged) ac input power to the PN 282 via front-panel circuit breaker S2. This input voltage is applied to parallel capacitors C4, 5 and 6 which constitute the shunt arm of the line filter; chokes L3 and L4 are the series branch.

Voltage monitoring is accomplished by measuring the current flowing in resistor R7 (shunted by R8), ac-coupled across the output via capacitor C4. Current transformer T3 performs the current-to-voltage transformation. Its output is connected to otherwise-floating coax output connector J282-3. This is connected via external cable to the Model 424 V Monitor coas, now used as an input rather than an output. (Monitoring can still be accomplished if desired, via a coax Tee.) The current transformer load is the 50-ohm terminating impedance of the V Monitor circuit (see section 3.6). Ground for the entire monitoring circuit derives from circuit ground via the V Monitor coax shell.

## 5.43 PN283

### 5.43.1 General Information

The PN283, along with the basic Model 424, generates linear ramp or rate-of-rise waves to 5 kV, for higher-voltage testing of SCR's, gas tubes and circuits. Available rates-of-rise depend on the specific Termination Network employed at the end of the Model 283 output cable supplied. For optimum waveshape, particularly with rates-of-rise greater than 1 kV/usec, the Termination Network must be as close to the load as possible. Leads from the Termination Network binding posts to the device under test of not more than three inches are recommended, to minimize unwanted wave reflections and consequent degradation in waveshapes delivered.

All-important isolated peak voltage and current measurements are provided. The peak voltage measurement is made within the PN283; coupling to the Model 424 measurement circuits merely required connecting a short coax cable, supplied with the PN283, between an auxiliary PN283 output and the Model 424 V Monitor connector. Use of the termination Model 488 as specified on the Model 424 output terminal array, (not to be confused with the different Termination Network, Model 283-X, required at the end of the Model PN283 output cable), provides a 10 kV range decimal point when the Model 424 1 kV range is selected; hence measured peak output voltages are read directly on the digital display, in kV; as well as in go/no go form on the Model 424 panel.

Peak current is transduced within the Model 283-X Termination Network, so that is does not include the rather significant current flowing in the wave-shaping capacitors also housed there. An auxiliary coax cable from the 283-X Termination Network to the Model 424 I Monitor connector couples the current measurement to the Model 424 peak sensing and display circuitry.

The basic Model PN283 automatically selects the 1000A Model 424 range; the PN283 Option 01 automatically selects the 100A range. For the Option 01, readings above 150A merely indicate large short-circuit current, and should not be taken as correct as the display limits between 150 and 200A.

Several cable Termination Networks are available for the PN283, providing different rates of rise. Some are equipped with selector plugs that permit two or more different rates of rise to be generated using the same Termination Network, by unscrewing one auxiliary cable plug on top of the Termination Network and replacing it with another.

This page left blank intentionally.

### 5.43.2 Specifications

All specifications apply to Model PN283 and Model PN283 Option 01, with cable Termination Network T283-1.

| | |
|---|---|
| Wavefront | 5 kV/usec ± 5% and<br>2 kV/usec ± 5%, 10 to 90%, set by which plug is inserted into the T283-1 auxiliary top cable jack. |
| Peak voltage "plateau" | 5 kV for 1 kV setting on Model 424 open-circuit voltage meter; i.e., 5 x the meter setting.*<br><br>Proportionately lower output results for lower meter settings. |
| Overshoot | 10% maximum, beyond plateau |
| Flat top | Plateau ± 10% for 5 usec minimum |
| Front linearity | ±10%, from 10 to 90% of plateau |
| Terminating capacitance (across load) | .016 mfd, 5 kV/usec<br>.032 mfd, 2 kV/usec |
| Current measurement | Load current only, excluding current into terminating capacitance (sensed within Termination Network). |
| Voltage range, Model 424 | 10 kV, when 1 kV range pushbutton is depressed and Model 424 termination Model 488 is employed. |
| Current range, Model 424 | 1000 A, PN 283<br>100 A, PN 283 Option 01<br>(overloads between 150 and 200 A for Option 01) |

*Plateau may not be exactly 5 kV, but the 1 kV setting on the Model 424 open-circuit voltage meter is mandatory to obtain specified rate-of-rise, be it 5 kV/usec or 2 kV/usec.

Accuracy

| | |
|---|---|
| Voltage reading | Peak voltage including overshoot readout to ± 150 V if no SCR or gas tube breakdown; to ± 250 V if the device under test breaks down. |
| Current reading | Peak current in device under test to ± 5% rdg, ± 3% of range. Minimum guaranteed reading, 10 A. |

5.43.3 Operating Instructions

1. DO NOT under any circumstances use other than three-terminal connections to the ac line. That is, DO NOT "cheat" the ac-line connector to open the ac line ground connection.

   Only by maintaining the three-wire ac line connection can the Model 424 chassis be grounded to line ground, and personnel and equipment safety thereby assured.

2. Insert the plug-in Programmer Network PN 283 into the Model 424 mainframe. As it protrudes about five inches in front of the Model 424, make sure there is bench support under the entire protruding portion, as most of the plug-in's weight is located in this front section.

3. Once it has been verified that the printed-circuit connectors are fully "made" at the back of the Programmer, lock it into place by pushing the latch located at the left of the plug-in into the vertical position, designated "Lock".

4. Remove all links EXCEPT the Chassis Ground - Measure Lo link from the Model 424 output terminal array. (Even this link may be removed on the Model 424 Option 01, in which the connection is made internally -- or it may be left in place externally as well). Install KeyTek Termination Model 488, supplied with the PN 283, on these terminals.

5. Connect the short coax cable, supplied with the PN 283, between the coax connector designated "Connect to V Monitor" (J 283-3), and the Model 424 V Monitor connector.

6. Connect the PN 283 output cable via the high-voltage connector J283-1 on the right-hand side of the protruding part of the plug-in, just in front of the Model 488 termination on the Model 424 front panel terminal array.

7. Connect the PN 283 interlock cable via the telephone jack J 283-2 located just behind the high-voltage connector of item (6).

8. Connect the desired PN 283 Termination Network to the ends of the cables just connected in items (6) and (7) -- the T283-1, for example, for 5 and 2 kV/usec. The cable connected to J283-1 terminates on J283-4, while the cable connected to J283-2 terminates on J283-5 (not J283-7).

9. Insert the correct plug, when applicable, into the Termination Network just connected; 5 kV for 5 kV/usec and 2 kV for 2kV/usec, etc.

10. Mount the Termination Network directly adjacent to the device or circuit under test, in a test chamber suitable to provide operator protection from both high voltage to 10 kV, and the remote possibility of device fragmentation under surge.

    Connect the normally-open, floating, ungrounded interlock switch or relay contacts on the chamber access door to the tip and ring connections on the second telephone jack (J283-7) on the side of the appropriate Termination Network. There is also a connection between the barrel or shield connection on this cable, and the Model T283-1 and Model 424 chassis -- and ac line ground thereby. Do NOT connect this shield or chassis ground to the circuit interlock wires.

    Closure of the normally-open interlock switch contacts allows generation of a Model 424 output pulse.

    It is mandatory that both interlock leads (tip and ring on J283-7) be entirely floating, and that neither be grounded; as a false interlock can otherwise result.

11. Connect the coax cable (supplied), between the coax output connector on the Termination Network (J283-6) and the Model 424 I Monitor connector.

12. Connect the load to the output binding posts of the Termination Network in use; leads should be as short as possible, but in no case longer than 3 inches, particularly for waves with rates of rise greater than 1 kV/usec to obtain specified performance.

    The red output terminal is high with respect to the black one, for (+) output ramps; and goes low with respect to the black for (-) output ramps. The black terminal is ground, but should

NOT be connected to chassis or to any other point than the device being surged, otherwise output waveform will be impaired.

13. Set the peak open circuit voltage on the Model 424 to one-fifth the desired output peak. Set Model 424 voltage range to 1 kV. Measured peak output will read directly in kilovolts, to a maximum of 6 to 7 kV, on the Model 424 digital display.

14. Use the Model 424 Charge (+) and Charge (-) and Pulse switches, in normal sequence.

5.43.4 Theory of Operation

Important characteristics of the Model PN 283 include:

1. It uses a transformer to step the voltage peak up -- to over 5 kV.

2. A cable/Termination Network combination, part of the PN 283 as shipped, allows delivery of the wave up to 24 inches from the PN 283 itself, into loads such as SCR's, with extremely non-linear impedance characterists.

3. Voltage monitoring for peak output surge is floating, to provide freedom from ground current problems due to the high charging currents involved.

4. Output current monitoring is likewise floating. The current transformer that performs the transduction is mounted within the Model 283 Termination Network. This facilitates monitoring true output current, independent of current in the wave-shaping capacitor which is necessarily mounted within the Termination Network to obtain high-quality waveshapes at the load.

5. The entire Model 424 circuit interlock system depends on connection between pin 1 on J283-1, the PN 283 high-voltage output connector, and the ring connection to telephone jack J283-2, the PN 283 interlock connector. (Both J283-1 and J283-2 are located on the right-hand side of the portion of the PN 283 that extends beyond the Model 424 front panel.)

   This connection is accomplished within the specific Termination Network in use at the ends of the cables connected to J283-1 and J283-2. Closure of the interlock which enables the Model 424 to generate the output ramp wave, requires that:

   A. the appropriate cable is connected to J283-1;
   B. the other end of that cable is connected to the appropriate Termination Network connector, J283-4;
   C. the appropriate cable is connected to J283-2;
   D. the other end of that cable is connected to the appropriate Termination Network connector, J283-5;

E. a wave-determining plug is inserted into the appropriate multi-pin high-voltage jack on top of the Termination Network in use, when such a jack is provided; and finally,

F. a connection is made by interlock switch or other contacts, user-supplied and connected to tip and ring connections of the auxiliary telephone jack on the long side of the Termination Network, designated J283-7.

By means of the above interlock system, it is thereby insured that no high voltage pins or connections can be exposed except at the output binding posts of the Termination Network, where the output is designed to be delivered within a safety enclosure. These terminals are necessarily close to the load being surged within the same enclosure.

The PN 283 schematics are given in the schematic section for those installations that include the PN 283. The Model 424 built-in 25 mfd surge capacitor supplies 3:1 stepup transformer T1. The output wave is applied to series resistors R1, R2 and R3, and then to the output connector J283-1; both directly to pin 5, and via choke L1 to pin 7 and L1 and L2 in series to pin 6. The wave-select plug in the Termination Network at the end of the cable, shown in the pertinent Termination Network schematic, determines whether the line is used directly or through one of the inductive circuits.

Voltage is sensed via resistor R4, directly across the Termination Network output fed back to the PN 283 itself via pins 3 and 2, high and low, on connector J283-1. Capacitor C1 in series with R4 isolates any possible dc. The current driving R4 is sensed via transformer T2, whose output is then applied, via coax cable J283-3, to the V Monitor input on the Model 424.

Within the Termination Network, a selected capacitor terminates the line, and the voltage across it is furnished to the Termination Network's output binding posts. The low end is sensed via a current transformer whose output is furnished, via coax cable, to the I Monitor input on the Model 424 panel.

This page, and 5-49 through 5-68, left blank intentionally.

## 5.46 PN 286

### 5.46.1 General Information

The PN 286, along with the basic Model 424, generates rate-of-rise waves or ramps, linear to 2.5 kV for 100 V/usec, and to 3 kV for 500V, 1 kV, 5 kV and 10 kV/usec.

Output is taken from the right-hand side of the protruding portion of the (oversize) Programmer Network, rather than from the normal Model 424 output terminals. (Termination Model 488N is plugged into the latter.) Four-wire connections are still provided, as with the standard Model 424: HI and LO for OUT, and HI and LO for MEASURE: except that all four are on the Programmer itself.

### 5.46.2 Specifications

See all pertinent tables for other general Programmer Networks: Tables 1-1, 2-0, 2-1, 2-2, 2-3 and so on. (See page xxiv in front of Manual, for table listing.)

This page left blank intentionally.

Unless there is a particular reason for changing this setup, leave the links in place. In any event, they must be tight in order to obtain the proper waves.

8. Use Termination Model 486 on the Out High - Out Low terminals on the right side of the PN 286; then add the load being surged.

9. Set the peak open circuit voltage on the Model 424 to 3 kV on units with red, 7.5 kV scales; to 1500 V on units with single, black 1500 V scales. Set Model 424 voltage range to 1 kV. Measured peak output must be multiplied x 2 in either case, to obtain actual peak delivered output voltage.

10. Use the Model 424 Charge (+) or Charge (-) and Pulse switches in normal sequence, to generate and measure the output surge.

This page, and 5-73 through 5-100, left blank intentionally.

5.46.3 Operating Instructions

1. With the latch at the left of the PN 286 plug-in fully horizontal, insert plug-in Programmer Network PN 286 into the Model 424 mainframe. As it protrudes about five inches in front of the Model 424, make sure there is bench support under the entire protruding portion, as much of the plug-in's weight is located in this front section.

2. Once it has been verified that the printed-circuit connectors are fully "made" at the back of the Programmer, lock it into place by pushing the latch located at the left of the plug-in into the vertical position, designated "Lock".

3. Make sure the Chassis Ground - Measure Lo link is on the Model 424 output terminal array. (It should never be removed, except for trouble-shooting.) Links from Out Hi to Measure Hi, and from Out Lo to Measure Lo, on the Model 424, are not necessary; but they may be left in place if they are installed.

4. Install KeyTek Termination Model 488N, supplied with the PN 286, on the Model 424 output terminal array.

5. Connect the short coax cable, supplied with the PN 286, between the coax connector designated "Connect to V Monitor" on the right side of the PN 286, and the Model 424 front panel V Monitor connector.

   Note: For minimum waveform anomalies, use the second coax cable, supplied, incorporating the balun. (Connect the balun-end of the cable to the Model 424 V Monitor coax.) For more information on baluns, see section 2.9.1.

6. In any event, for minimum waveform anomalies particularly with gas-tubes and other crowbar devices, use of an EMI-protected scope, with a balun in the probe lead, is recommended. (See section 2.9.1.)

7. As shipped, the Out High (front red 5-way binding post on the side of the PN 286) is linked to the Measure High (rear red 5-way binding post); and similarly, for Out Low and Measure Low.

## 5.51 PN 291

### 5.51.1 General Information

Programmer Network PN 291 supplies wide-range current capability, with long impulse waves, for the Model 424 Surge Generator/Monitor. This single Programmer provides both low and high peak current ranges -- from 1A to 300A -- for the traditional 1000 usec-decay-time current wave used for testing carbon-block arresters.

Voltage waves are designed to provide the pertinent traditional carbon-block test parameters as well: exponential rise to 1200V peak, with slope between 100 and 120 V/usec at 700V; followed by exponential decay. Thus the six-range unit is specifically tailored for traditional carbon-block arrester testing, while providing gas-tube and other protector test capability as well.

The PN 291 plusg into the Model 424 equipped with Option I, which adds a 10A current range to the basic 100A and 1000A ranges in the Model 424. The 10A range (as well as the normal 100A and 1000A ranges, for that matter), is selected automatically by the Programmer Network via its panel selector switch.

Auxiliary Models 210 and 211 Energy Storage Units, added to the Model 424, provide the total of 630 joules needed for the 300A peak, 1000 usec-decay-time output current impulses. In spite of the high available energy, maximum output pulse rate is 4/minute.

### 5.51.2 Specifications

Outputs

| Mode | Open-Circuit Voltage Peak Range | Open-Circuit Voltage Peak for Nominal I & Waveshape | Waveshape* (ANSI Nomenclature) |
|---|---|---|---|
| 1 | 0-1.5 kV | 1.2 kV | 12 x 2800 |
| 2 | 0-1.5 kV | 1.2 kV | 15 x 1260 |
| 3 | 0-1.5 kV | 1.2 kV | 15 x 1000 |
| 4 | 0-1.5 kV | 1.2 kV | 15 x 1000 |
| 5 | 0-1.5 kV | 1.2 kV | 15 x 1000 |
| 6 | 0-1.2 kV | 1.2 kV | 15 x 1000 |

* To duplicate traditional carbon-block arrester test waves, voltage waveshapes are designed to provide a leading edge slope at 700V that lies between 100 and 120 V/usec; for a 1200V peak open-circuit voltage.

Short-Circuit Current

| Mode | Peak Range | Peak | Waveshape* (ANSI Nomenclature) |
|---|---|---|---|
| 1 | 0-375 | 300A | 9 x 1000 |
| 2 | 0-125 | 100A | 16 x 1000 |
| 3 | 0-37.5 | 30A | 13 x 1000 |
| 4 | 0-12.5 | 10A | 13 x 1000 |
| 5 | 0- 6.25 | 5A | 13 x 1000 |
| 6 | 0- 1 | 1A | 12 x 1000 |

| | |
|---|---|
| Accuracy, virtual front durations | ± 10% |
| **Accuracy, decay** times | ± 20% |
| Maximum pulse rate | 3/minute, full output. |
| | 4/minute, ~3% decrease in output. (Can obtain full output by using ~3% high open-circuit voltage setting.) |
| Monitoring | Full digital and go/no go monitoring for peak voltage and current, built into the basic Model 424 |
| Options required | Models 210 and 211, Option I |

* Designed to provide a short-circuit decay time of 1000 usec, with virtual front time uncritical in the range from 5 to 20 used.

5.51.3 Operating Instructions

1. With the latch at the left of the PN 291 plug-in fully horizontal, insert plug-in Programmer Network PN 291 into the Model 424 mainframe. As it protrudes about five inches in front of the Model 424, make sure there is bench support under the entire protruding portion, as much of the plug-in's weight is located in this front section.

2. Once it has been verified that the printed-circuit connectors are fully "made" at the back of the Programmer, lock it into place by pushing the latch located at the left of the plug-in into the vertical position, designated "Lock".

3. Terminations: Use the 485 or 486 for 1A through 100A ranges. They are also satisfactory for 300A; but for minimum waveform anomalies the termination T291-300 may be preferred for this range.

4. Set Voltage: the PN 291 waves are defined for 1200V peak open-circuit Set Voltage. The unit may be overranged to 1500V for intermittent operation.

5. On the lower current ranges, output impedance is necessarily high. On the 1A range it is over 1000 ohms, for example. Open-circuit output voltage has therefore been compensated for the 10K input load of the Model 424 Measure circuitry on the 1 kV range, as have all output resistance figures quoted throughout the Manual for this Programmer Network. On these lower ranges, use of the 100V Model 424 Measure range, with its 1K input resistance, will normally be inappropriate and is not recommended.

6. 15-second repeat cycling won't allow quite full charge of the storage capacitor bank (see Specifications, section 5.51.2); an output "shortfall" on the order of 3% may result. If full output is desired, either set it a few per cent high and repeat cycle at maximum (1 per 15 second) rate, or else cycle at 1 per 20 seconds at normal (presumably 1200V) setting.

This page left blank, and pages 5-105 through 5-120 omitted intentionally.

## 5.53 PN 293

### 5.53.3 Operating Instructions

1. Locate the Model 231 above the Model 424. Plug in the PN 293. Remove the links except leave the Chassis Ground - to - Measure Lo link on the Model 424 output terminal array. Install Termination Model 488 on those terminals.

2. Connect the auxiliary, multi-pin high-voltage cable, supplied with the PN 293/Model 231/Model T451 combination, between the appropriate rear connectors of the Model 424 and Model 231.

3. Connect the two, multi-pin high voltage cables, supplied, between Output and Measure connectors on the Model 231 front panel, and the left rear and left front connectors on the T451 respectively.

4. Connect the V Monitor coaxes on the Models 424 and 231 with the coax cable supplied.

5. Connect the I Monitor coaxes on the Models 424 and 231 with the coax cable supplied.

6. Close T451 Test Fixture cover after connecting component or circuit to be surged. Use the Test Fixture auxiliary interlock cable if a remote test chamber is used, to preserve the interlock system integrity.

This page left blank intentionally.

# 6. Options and Accessory Equipment

## 6.1 Model 450 Component Test Fixture

### 6.1.1 Description

The Model 450 Component Test Fixture provides zero-insertion force, Kelvin test capability for use when testing components at high peak currents and voltages. It is also useful when testing components requiring a low-leakage fixture. It is particularly well-suited to surge and impulse test waveforms, as applied to all types of devices with either axial or radial leads.

A plastic cover -- transparent or opaque as required, provides safety via a positive interlock to the voltage or current source supplying component test excitation. Closing the Model 450 cover automatically makes all four component connections -- two for drive and two for sense or measure -- as well as the electrical interlock.

The basic Model 450 is supplied with eight-inch leads, terminated in a multi-pin connector assembly compatible with the KeyTek Model 424 Surge Generator/Monitor output terminals and interlock circuits.

### 6.1.2 Specifications

1. Electrical

| | |
|---|---|
| Voltage, operating | 2000 V peak, 1400 V rms |
| Current capability | 500 A peak, 3 A rms |
| Drive/Sense Coupling | 0.03 uH typ., 0.15 uH max.; (+ 2 to + 10 milliohms for 8 x 20 impulse) |
| Leakage resistance | $10^{11}$ ohms min. at 25° C, 55% relative humidity |
| Wiring | |
| Model 450 | 8" leads, terminated in multi-pin connector assembly compatible with Model 424 Surge Generator/Monitor |
| Model 450A | 3' shielded drive and sense leads, twisted interlock and chassis lead; unterminated |

| | |
|---|---|
| Model 450B | No external wiring |
| Interlock output | Microswitch contact closure when cover is fully closed |

2. Mechanical

| | |
|---|---|
| Contacts | Four-wire Kelvin, for both axial and radial lead components |
| Width | 0.5" (12.7 mm) |
| Spacing | |
| For axial leads | 0.5" to 1.5" centers, adjustable (12.7 to 38.1 mm) |
| For radial leads | Same side, 0.25" to 0.35" (6.4 to 8.9 mm) |
| Material | Beryllium copper |
| Finish | Plated, gold over nickel |
| Mounting | Can be secured to test bench without disassembly |
| Size | 6"w x 4 1/2"h x 7"d (15.2w x 11.4h x 17.8d, cm) |
| Weight | 2 lbs. (0.9 kg) |

3. Option 01

Opaque plastic cover and light baffles, for semi-dark operation. Without Option 01, cover is clear.

## 6.1.3 Operating Instructions

### 1. Contact Setup Procedure

In order to provide the minimum force requirement for closing the Model 450 cover, provision has been included for "locking out" the unused contacts and the spring force they require -- axial or radial. If the fixture is used infrequently, or alternately for axial and radial-lead components, all of the contacts may be left permanently operational.

Note: As shipped, the contacts are set up for axial-lead components.

### 2. Axial-Lead Components

Axial-lead components utilize the contacts on the left contact arm and the upper set on the right contact arm. Thus the lower contact set on the right arm need not be activated. To remove its spring force from the cover-closing operation, perform the following steps:

A. With the fixture cover open, unscrew the set-screw at the front of the left side until the spring-loaded treadle is free to travel below the screw.

B. Depress the treadle below the level of the screw in some models, or until the screw lines up with the tapped hole in the treadle (since it is plastic it can be readily viewed) in others.

C. Re-tighten the thumb set-screw so that it lodges above the treadle (when no hole is provided), or threads into the hole in the treadle (when a hole is provided), thereby holding the treadle out of the way.

D. Adjust contact spacing by moving the rear of one or both contact arms along the steel bar on which they hinge, at the rear of the fixture.

### 3. Radial-Lead Components

Radial-lead components use the two sets of contacts on the right contact arm, and do not require the left arm at all. To remove the entire left-arm

spring force from the cover-closing operation, perform the following steps:

A. Reverse the steps in section (2) directly above, releasing the treadle so it can provide the required spring force for the lower contacts on the right contact arm.

B. Move the left contact arm to the far left, sliding the rear of that arm along the steel bar on which it is hinged. Note that left and right arms are connected by cable, so it may be necessary to slide the right arm somewhat to the left as well, to allow the left arm to move fully to the left.

C. Depress the left arm when it reaches the stop that protrudes from the left side at the rear, and continue moving the arm to the left so that it slides under and is retained by the stop.

D. Move the right arm to a position roughly at the center or somewhat to left of center of the fixture (for right-handed operators -- position slightly to right of center for left-handed operators).

4. Model 424 Connections

When the KeyTek Model 424 Surge Generator/Monitor is used in conjunction with the Model 450 Test Fixture, all links should be removed from the Model 424 front panel terminal array except the link between Chassis Ground and Measure Lo. (This link is indeed connected within the Model 450 Test Fixture; however, it is not necessary to remove it, and since it is so important for safety purposes to have it inplace when the Model 424 is used in other applications than with the Model 450, it should permanently be left in place.)

The Model 450 adapter plug is designed to fit over the Model 424 output terminal array with the Chassis Ground - Measure Lo link in place: but it will not fit fully over the array if a link is in place between Out Hi and Measure Hi, or Out Lo and Measure Lo. Such links will cause errors in the measurement, as the connections should be made at the Test Fixture via the four-lead contact array, and not at the Model 424 when the Test Fixture is in use.

5. Interlock

The Model 450 interlock switch makes connection between the phone jack ring and barrel terminals (or between phone jack ring and Out Lo on earlier models).

Thus, only if the Model 450 cover is closed will this interlock connection be closed, and the Model 424 be able to Charge and Pulse, generating the test surge for the now-totally-enclosed component.

6. Operation

Figure 6-1 shows the various steps in using the Model 450 for either axial or radial-lead components.

6.1.4 Theory of Operation

Simplified schematics for the Model 450 wiring are given in Figs. 6-2 and 6-3, for axial-lead and radial-lead component testing respectively. For practical reasons associated with using the same fixture for components with both lead configurations, the four-lead arrangement is different with axial leads from the radial-lead application. For axial leads, the sense terminals are closest to the component, while drive connections are further out on the lead; for radial leads, sense and drive are interchanged. Since most of the lower voltage devices use axial leads, the interchange is of no practical significance.

6.1.5 Calibration

At higher current levels and for high-speed waves, in any four-wire test fixture, drive/measure loop inductive coupling can result in measurement errors. The errors can be expressed in terms of the mutual inductance between the drive and measure loops. This is specified for the Model 450 at + 0.03 uH typical, ± 0.15 uH maximum, corresponding with + 2 milliohms typical, ± 10 milliohms maximum for an 8 x 20 pulse (and proportionately higher for higher-speed leading edges), in terms of equivalent impedance.

The + sign derives from the fact that the basic loop inductance is cancelled within the Model 450 internal wiring. However, the cancellation, while usually several times better than specified, cannot be perfect due to variations in component size, location, wire runs and so on. Since the var-

(a)

Drop in axial-lead component

(b)

(c)

or radial-lead component.....

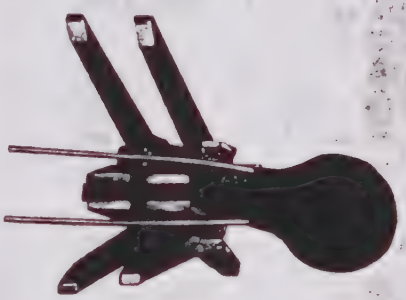

(d)

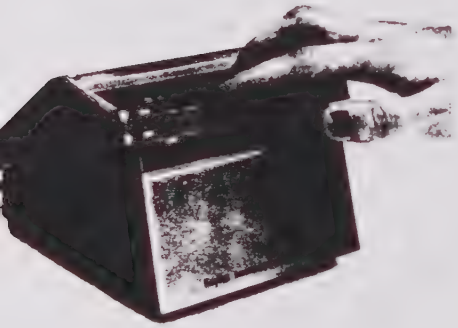

(e)

close cover (making 4-lead connections and closing interlock), and test...

(f)

... then release latch to remove component.

Fig. 6-1
USING THE MODEL 450 TEST FIXTURE

Fig. 6-2

TESTING AXIAL-LEAD COMPONENTS
WITH THE MODEL 450

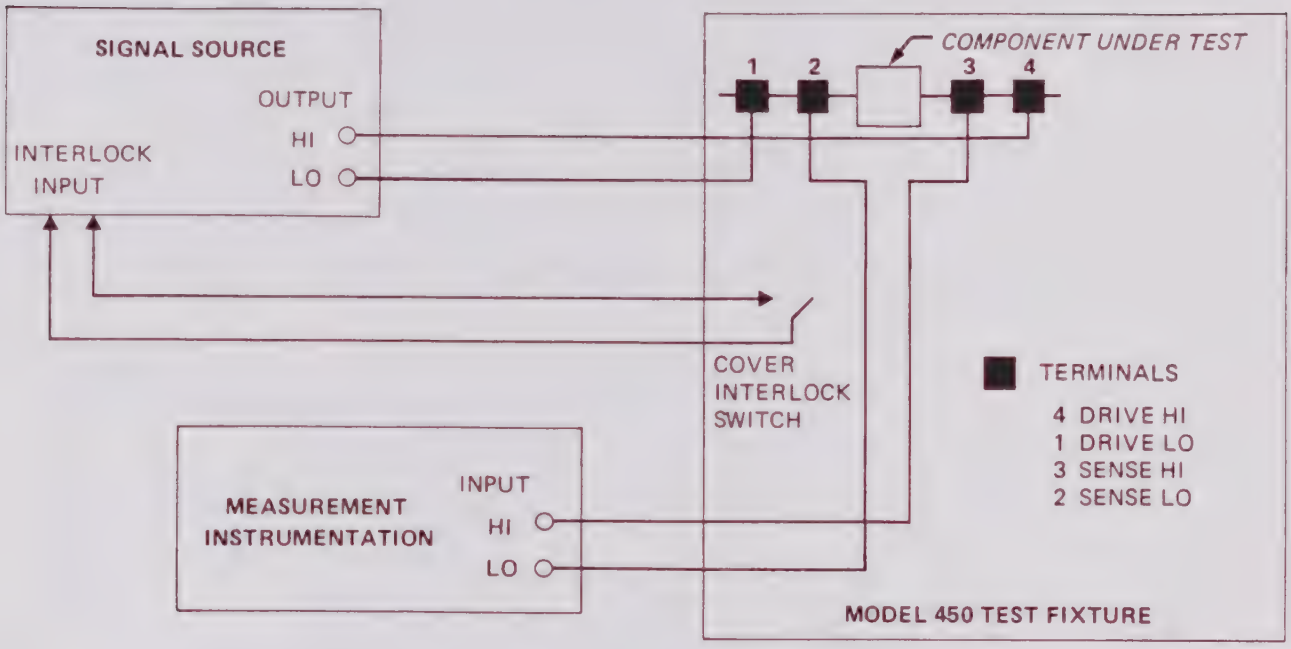


Fig. 6-3

TESTING RADIAL-LEAD COMPONENTS
WITH THE MODEL 450

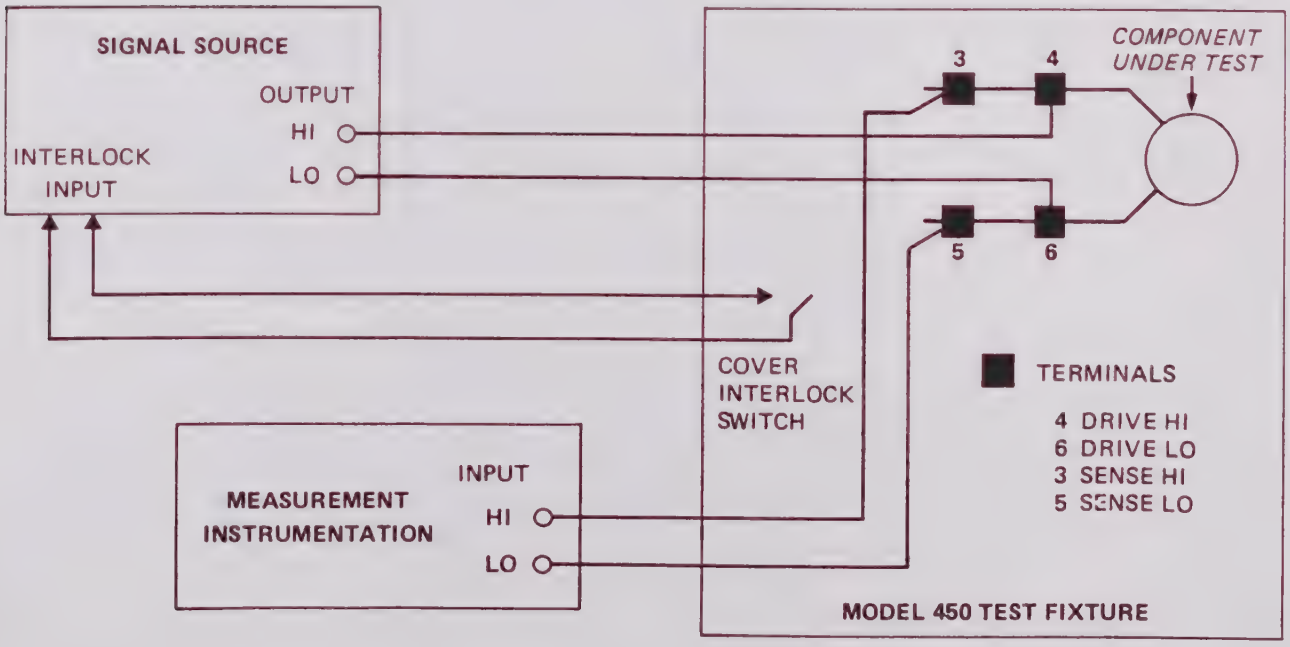

iations can be up or down around the cancellation point, resulting measurement error -- expressed in terms of either the mutual inductance or the coupling impedance -- can be either positive or negative depending on specific conditions and the fixture involved.

Expressed differently, typical errors at 500 A (pulsed) for an 8 x 20 wave can be several volts; for faster waves like the 1.2 x 50, several times these figures. At levels over a hundred volts or so, this is generally unimportant. For low-voltage avalanche devices or varistors, however, it may be more significant.

The measurement error due to loop coupling or other effects can be 'calibrated out' by using conventional test fixture calibration techniques, as follows:

1. First, measure the performance of a typical device of the kind being tested, directly at the terminals of the test instrument -- KeyTek Model 424 or other stimulus generator. For the Model 424, the connection arrangement of Fig. 2-7 would be preferred. That is, connect Out and Measure terminals, both Hi and Lo, to one another right at the instrument, and mount the device under test as close to these terminals as possible; with the termination mounted as shown in Fig. 2-7.

2. Next, measure the performance of the same device in the Model 450 Test Fixture. Use the difference between the two readings as a correction on the readings obtained with the Model 450. Thus, if an avalanche device reads 7.5 V at the Model 424 output and 8.5 V at the Test Fixture for a particular wave such as the 8 x 20 impulse at 500 A, then a one-volt correction may be used for the Test Fixture for that same kind of device at that current and for that wave. A new correction must be determined for each device/wave/current combination when precision is required at high currents and low voltage levels.

3. If the device under test is statistical in performance, such as a gas discharge tube, then twenty or more readings should be taken at each location and the results averaged to obtain the correction. For some gas tubes it is crucially important that they be subjected to the same light

intensity in order for them to give relatively consistent readings -- with standard deviations of twenty or thirty volts at 10 kV/usec -- if subjected to fairly high levels of illumination, comparable to those in laboratory environments. Even shadowing some of these tubes or turning them away from the light can cause major shifts in striking potential.

Tests can readily be run directly at the instrument terminals, first with high illumination (using a flashlight, for example, pointed directly at the device under test) and then in relative darkness -- by covering the device with black cloth -- to determine light sensitivity before using the device to calibrate the Test Fixture. In any event, changes from instrument terminals to Test Fixture results rarely exceed a few tens of volts at rates as high as 10 kV/usec.

Similar precautions should be taken regarding which lead is low when the tests are run, even for devices that are supposedly non-polar such as gas tubes, varistors and back-to-back avalanche diodes. Surge polarity history can be important, too; following repeated (-) surges with a (+) surge can give very different results from the (+) surge results obtained at the end of a string of (+) surges; hence care should be taken to go through the exact same sequence of operations, surge polarities and so on when calibrating for the small Fixture errors.

4. TERMINATION: The Model 450 includes a built-in shunt termination, for use with the Model 424. It consists of a series 0.0011 mfd - 27 ohm combination. Hence the normal 424 termination isn't necessary.

The Model 450A and 450B, designed for other applications, don't include the termination.

Programmers generating waves that require different terminations, if used for component test, will require special arrangements. (The PN 249 is one such unit, but unlikely to be used in component testing.) Consult factory for assistance.

## 6.2 Models 210 and 211 Energy Storage Units

### 6.2.1 Description

The Model 210 and Model 211 Energy Storage Units are almost identical units, designed to provide additional energy storage for the Model 424 Surge Generator/Monitor. This additional energy brings the total stored to 315 joules when the Model 210 is used to augment the Model 424's basic 80 joules, and to 630 joules when the 211 is added to the combination.

The increased energy storage is necessary for higher-current, longer-duration surges such as the 10 x 1000 impulse at up to 500A (via Programmer Networks PN 250, 251) and the 4 x 200 impulse at up to 1500 A (using Programmer Network PN 249). Use of additional, modified Model 211's makes possible even further extension to 1000A via custom plug-in Programmer Networks.

The additional interlocks, high-voltage wiring and associated connectors required for the Model 424 itself are included with the Model 210. The Model 211, when supplied, is connected to the Model 210 and not to the Model 424 at all.

### 6.2.2 Specifications

1. Model 210

| | |
|---|---|
| Energy Storage Capacitance | 210 mfd |
| Maximum voltage | 2000 V |
| Energy stored in conjunction with basic Model 424 70 mfd capacitance at 1500 V | 315 joules |
| Discharge resistor, for Model 424/Model 210 or Model 424/Model 210/Model 211 combination | 10 ohms, 500 W |
| Energy selection | Selection of Model 210 auxiliary energy storage made automatically via rear-panel cabling, based |

| | |
|---|---|
| | on requirements of the particular Programmer Network in use in the Model 424. |
| Interlocks | |
| Safety | Fully interlocked with Models 424 and 211 to prevent 424 Charge/Pulse operation unless all rear high-voltage cables (or substitute "keeper" plugs or cables) are connected. |
| Performance | Fully interlocked with Models 424 and 211 to prevent operation if a Programmer Network requiring the Model 210 auxiliary energy storage is in use, but a "keeper" cable is connected at the rear of the Model 424 and the Model 210 not connected. |
| Physical | |
| Operating temperature range | 10 to 50° C |
| Dimensions | 5-1/4" h x 19-1/2" d x 17" w (14 x 49.5 x 43.2 cm) |
| Weight | 50 lbs. (22.5 kg) |
| Power | No external power requirements; all connections are to the Model 424 or Model 211 |
| Controls | None |

| | |
|---|---|
| Connectors | 1. High-voltage, 7-pin for cable to Model 424<br>2. High-voltage, 6-pin for cable to Model 211 when supplied; furnished with potted "keeper" plug when installation doesn't use Model 211 (for possible future addition).<br>3. Telephone jack for connection to Model 424: interlock connections.<br>4. Telephone jack for connection to Model 211 when supplied; interlock connections. No "keeper" necessary if Model 211 not supplied.<br><br>Note: connections to (3) and (4) above are interchangeable. |
| Cables | Cables for (1) and (3) above supplied with Model 210. |
| "Keepers" | "Keeper" for (2) above supplied with Model 210, only if Model 211 not supplied with the installation. |
| PULSE RATE | Maximum Model 424 pulse rate when Model 210 supplied, 2/minute, set by Programmer Network in use if it requires the Model 210 alone; 1/minute if it requires both Model 210 and 211. |

2. Model 211

| | |
|---|---|
| Energy storage capacitance | 280 mfd |
| Maximum voltage | 2000 V |
| Energy storage in conjunction with basic Model 424 70 mfd capacitance and Model 210, 210 mfd capacitance at 1500 V | 630 joules |
| Discharge resistor, for Model 424/Model 210/Model 211 combination | Built into Model 210 |
| Energy selection | Selection of Model 211 auxiliary energy storage made automatically via rear-panel cabling, based on requirements of the particular Programmer Network in use in the Model 424. |
| Interlocks | |
| Safety | Fully interlocked with Models 424 and 210 to prevent 424 Charge/Pulse operation unless all rear high-voltage cables (or substitute "keeper" plugs or cables) are connected. |
| Performance | Fully interlocked with Models 424 and 210 to prevent operation if a Programmer Network requiring the Model 211 auxiliary energy storage is in use, but a "keeper" cable is connected at the rear of the Model 424, or a "keeper" plug in place at the rear of the Model 210, and in either case the Model 211 is not connected. |

| | |
|---|---|
| Physical | |
| Operating temperature range | 10 to 50° C |
| Dimensions | 5-1/4" h x 19-1/2" d x 17" w (14 x 49.5 x 43.2 cm) |
| Weight | 50 lbs. (22.5 kg) |
| Power | No external power requirements; all connections are to the Model 211 (and possibly to auxiliary Model 211's) |
| Controls | None |
| Connectors | 1. High-voltage, 6-pin for cable to Model 210.<br>2. Telephone jack for connection to Model 210; interlock connections. |
| Cables | Cables for (1) and (2) above supplied with Model 211. |
| "Keepers" | No "keepers" needed or supplied with Model 211. |
| PULSE RATE | Maximum Model 424 pulse rate when Model 211 supplied, 1/minute, set by Programmer Network in use if it requires the Model 211 auxiliary energy storage. |

6.2.3 Operating Instructions

1. Mounting

If the Model 210 is supplied without the Model 211, it may be convenient to locate it directly above the Model 424 in a bench-mount situation. Alternately, if reaching the Charge switches on the Model 424 remains convenient, the Model 210 can be mounted below the Model 424. (This latter alternative isn't open when a Model 450 Test Fixture is also in use, as its cable length requires direct mounting of the Model 424 on thebench unless the Model 450 is itself elevated as well.)

If both Model 210 and 211 are supplied, in view of their combined 100 lb. weight it may be advisable to mount them one over the other, to the left side of the Model 424.

When the rack-mount handle option(s) are supplied for Model 210 and/or Model 211, since auxiliary rails are necessary (but not supplied) to support the units' weights, the auxiliary energy storage units may be be mounted over or under the Model 424 as may be desired.

2. Model 424 - Model 210 Connections

A. Connect the 7-pin high-voltage cable between mating connectors on the rear panels of the Models 424 and 210.

B. Connect a telephone-plug interlock cable between the jack on the rear panel of the Model 424 and either jack on the rear of the Model 210.

C. If the Model 210 is supplied in an installation not using a Model 211, the six-pin high-voltage bulkhead connector at the rear of the Model 210 will have been shipped with a "keeper" plug in place, to provide the necessary interlock connections. No "keeper" plug is needed or supplied for the second telephone jack on the rear panel of the Model 210.

3. Model 210 - Model 211 Connections

A. When the Model 211 is supplied as part of a Surge Test installation based on use of the

Model 424, the "keeper" plug referred to in (2C) directly above will not be furnished.

B. Connect the six-pin high-voltage cable between mating connectors on the rear panels of the Models 210 and 211.

C. Connect a second telephone-plug interlock cable between the second jack on the rear panel of the Model 210 and the jack on the rear panel of the Model 211.

4. Interlock System

A full description of the interlock system of the Model 424/Model 210/Model 211 combination of units is given in section 6.2.4, Theory of Operation, that follows.

Disconnecting any of the cables or the required "keepers" at the rear of the three units will open the circuit interlock system, preventing Charge/Pulse operation of the Model 424, even if the Programmer Network in use doesn't require auxiliary energy storage. This feature makes it impossible for high voltage to exist on exposed pins of a rear panel connector. If it desired to use alone a Model 424 that has been modified to work in conjunction with the Model 210 or 210/211 combination, a rear panel Model "keeper" cable is required, between specific pins on the 7-pin high-voltage connector and the telephone jack. Consult factory for assistance.

The interlock system is also operational even if a "keeper" cable is installed on the rear of the Model 424 or a "keeper" plug installed at the rear of the Model 210, if the missing energy storage unit(s) is (are) necessary for the particular Programmer Network plugged into the Model 424. Thus Charge/Pulse operation is inhibited unless the energy storage units are connected for the wave being generated. This aspect of interlock system operation prevents inadvertent generation of waves that don't correspond with the generating Programmer Network specifications and front panel markings.

5. Pulse Rate

Programmer Networks that employ the Model 210 energy storage but not the Model 211, include time delay circuitry on the Programmer Delay Board mounted within the Programmer Network, to limit pulsing to a rate of better than 2/minute.

Programmer Networks that use both the 210 and 211 energy storage capabilities, include time delay circuits, also on the Programmer Delay Board, to limit pulsing to a rate of slightly faster than 1/minute.

Each Programmer Network that generates a wave utilizing one or both of the Models 210 and 211 Energy Storage Units, also incorporates additional delay for the Programmable/Readout Option P circuits, stretching to about 30 seconds (for the 210 alone) and 60 seconds (for the 210/211 combination) the built-in delay. This delay is accessed automatically when either PULSE (+) or PULSE (-) is actuated in Programmable mode. (See section 1.5). The same additional circuits inhibit use of EXTERNAL PULSE (in conjunction with PULSE ALLOW) until the higher delays have timed out.

6. Selection of Model 210 or Models 210/211 Storage

Connection of the auxiliary energy storage in either the Model 210 or both Models 210 and 211, is accomplished automatically via pin connections and jumpers within the Programmer Network in use in the Model 424. Even though the Models 210 and 211 are connected to the Model 424, Programmer Networks not requiring the auxiliary energy storage they supply, will use only the basic stroage built into the Model 424 itself.

7. Operation with Programmable/Readout Option P

Pulse rate reductions are accomplished automatically even in Option P Programmable mode; they are covered under section (5) directly above.

Net 2, a pulse-forming network configuration-control input available with the standard Option P, is incompatible with use of the auxiliary units Models 210 or 210/211, hence it is omitted when they are supplied. Net 1, also standard with Option P, functions normally even with the Models 210 or 210/211 in place.

## 6.2.4 Theory of Operation

### 1. General

Fig. 6-4 shows Model 210 and Model 211 components and wiring; plus connections between the Model 424 Surge Generator/Monitor and the Model 210, as well as those between Model 210 and Model 211 Energy Storage Units.

The six, 35 mfd energy storage capacitors housed in the Model 210 are shown connected to Programmer Network connectors in the Model 424; with their common low ends permanently tied to Out Lo. Their common high ends are available for jompering within the Programmer Network; which is done for those Networks using the additional storage.

The eight, 35 mfd energy storage capacitors housed in the Model 211 are shown connected to appropriate Programmer Network connections in the Model 424 as well, with their low ends again permanently tied to Out Lo.

All of the Model 211 connections are made to the Model 424 via the Model 210. This "stringing" of additional energy storage units makes possible still further additions under special circumstances.

The capacitors in both Models 210 and 211 are equipped with bleeder resistors, to insure zero voltage when they are disconnected. R1 in series with R2 in each case, for a total of 200K (400K in some models), is the total bleeder resistance. While this represents a fairly long time constant -- 42.5 and 56 seconds for Models 210 and 211 respectively for the 200K bleeder case -- the main purpose is well served; namely, to prevent buildup of capacitor charge when the Energy Storage units are disconnected and not in use.

There are two circumstances in which the energy-storage capacitors in the Model 424 -- and those in the Models 210/211 -- may be discharged without generating a Model 424 output pulse:

A. If a Model 424 Charge (+) or Charge (-) switch is activated and then released without actuation of the Pulse switch, and

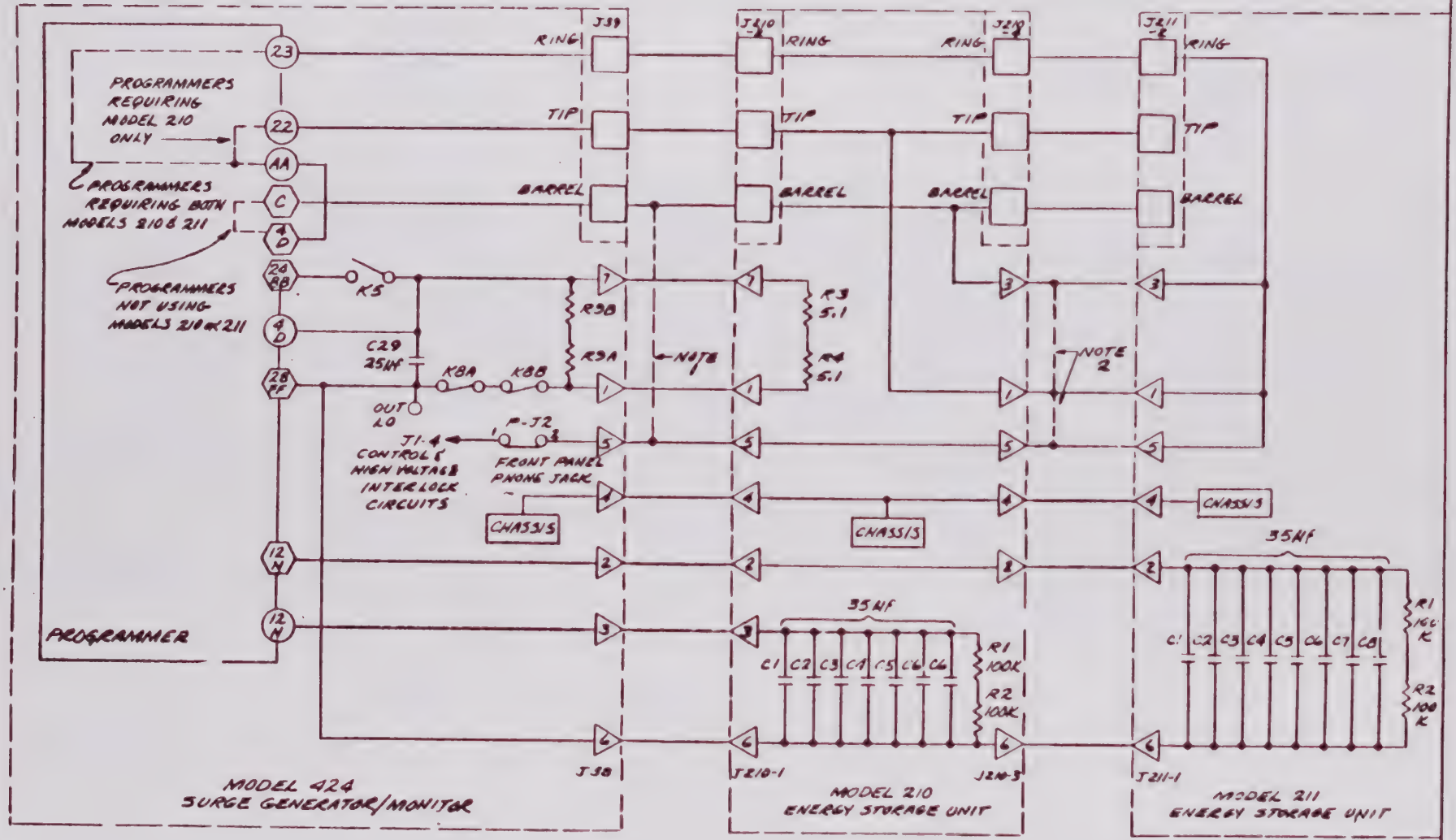


NOTES:

1. WIRED 'KEEPER' REQUIRED WHEN MODEL 210 NOT CONNECTED.
2. 'KEEPER' REQUIRED WHEN MODEL 211 NOT CONNECTED.

FIG. 6-4

ENERGY STORAGE UNITS 210 & 211

KeyTek INSTRUMENT CORP.

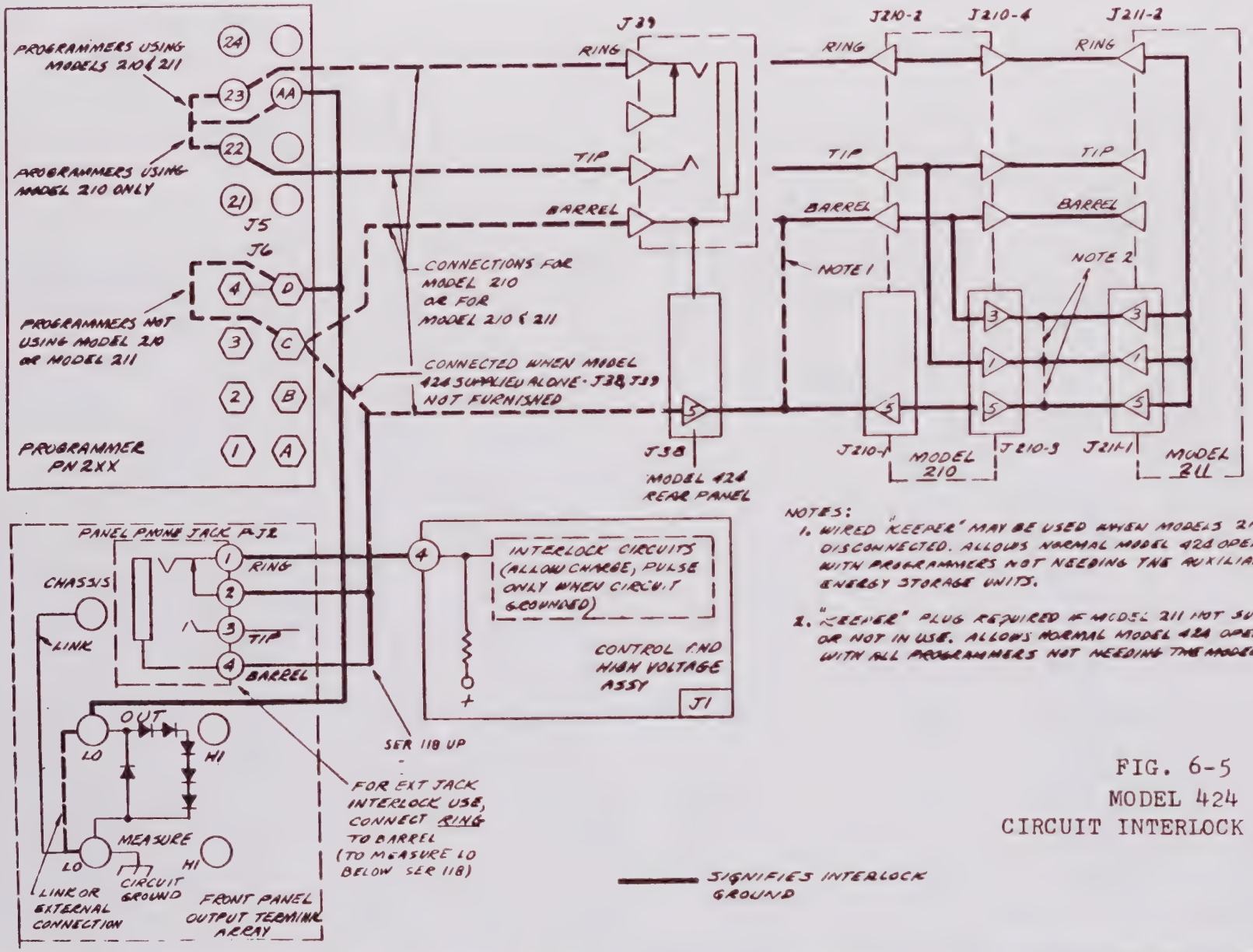


NOTES:

1. WIRED "KEEPER" MAY BE USED WHEN MODELS 210 & 211 DISCONNECTED. ALLOWS NORMAL MODEL 424 OPERATION WITH PROGRAMMERS NOT NEEDING THE AUXILIARY ENERGY STORAGE UNITS.
2. "KEEPER" PLUG REQUIRED IF MODEL 211 NOT SUPPLIED OR NOT IN USE. ALLOWS NORMAL MODEL 424 OPERATION WITH ALL PROGRAMMERS NOT NEEDING THE MODEL 211.

FIG. 6-5
MODEL 424
CIRCUIT INTERLOCK SYSTEM

B. If a Model 424 Charge (+) or Charge (-) switch is activated and the line power fails, having the same effect as (A).

In either event, a high-energy discharge will ensue via K8A and K8B, the normally-closed relays provided for this purpose within the Model 424 as shown in Fig. 6-4, and as already described in section 3.3.2.

To augment the series resistors R9A and R9B normally supplied within the Model 424 for this discharge, series resistors R3 and R4 are provided in the Model 210. Since R3 and R4 are 5.1 ohm, 250 watt units, they dominate the 100 ohm, R9A and R9B Model 424 resistors with which they are effectively parallel-connected; hence they take the brunt of the discharge. They function whether the Model 210 is used alone, or in conjunction with the Model 211 as well; no additional discharge capability is needed for energy storage well over the full 630 joules stored by the 210/211 combination.

Normal storage within the Model 424 functions as usual; including the 25 mfd capacitor C29 and 45 mfd of additional capacitance (not shown in Fig. 6-4) selected auxiliary to it by the Programmer Networks as required for each. K5, the pulse actuation relay, functions in the same way whether the Models 210 or 210/211 are in use.

2. Interlock System

The interlock system, shown for completeness in Fig. 6-4, is high-lighted in Fig. 6-5. It is based on the requirement for grounding pin 4 on J1, the Model 424 Control and High Voltage Assembly, in order to permit the Charge and Pulse operations required to generate a Model 424 output pulse. Tracing the connections to this pin shows all of the interlock functions for various equipment configurations.

A. Model 450 Test Fixture

When the Model 450 Test Fixture is used, the J1-4 connection to pin 2 of the Model 424 front panel jack P-J2, is broken by insertion of the telephone plug at the end of the Model 450 cable. Only if the Model 450 interlock microswitch is closed by closing the Model 450 cover, is the connection restored via the telephone plug barrel

connection to the same jack as shown. (Earlier Model 424's, but not including any that require Models 210 or 210/211, may have this barrel connection omitted. Model 450's shipped that way have their interlocks completed by connecting the telephone plug ring (pin 1) directly to Out Lo within the Model 450 when the microswitch is closed; the barrel connection is not used.)

B. Programmers Not Using Model 210 or 210/211

Whether or not the Model 450 is in use, pin 2 of front panel jack P-J2 must find its way to Out Lo, and thereby to Measure Lo or ground -- this last via the required Out Lo - Measure Lo connection. For Programmers not using auxiliary Energy Storage Units, P-J2 pin 2 is connected as shown in Fig. 6-5, to Programmer connector J6-C. It is internally jumpered to D, which is connected to Out Lo.

C. Programmers Using the Model 210

The connection between P-J2 pin 2 and Programmer connector J6-C isn't made; instead, P-J2 pin 2 is connected to pin 5 on the Model 424 rear panel high-voltage connector J38 as shown in the Figure. From there it is connected via interconnect cable to pin 5 on high-voltage connector 210-1, at the rear of the Model 210. It is jumpered through to pin 5 of J210-3, the outgoing high-voltage connector. It then finds its way via a "keeper" plug supplied if the 210 is furnished without the 211, to both tip and barrel on both J210-2 and J210-4, the telephone jacks on the Model 210 rear panel. From J210-2 tip and barrel it is connected via cable to the Model 424 rear panel telephone jack J39, tip and barrel. The barrel supplies Programmer connector J6-C, and an internal jumper within the Programmer to D (from where it goes to Out Lo) closes the circuit for those Programmers not using the Model 210, even when it is connected. A connection from J39 tip to Programmer connector J5-22, when jumpered within the Programmer to AA for those Programmers using the Model 210, again completes the circuit to Out Lo.

D. Programmers Using Both the Model 210 and 211

The situation is the same as in (C) above, except J210-3 pin 5 is connected to high-voltage connector J211-1 pin 5 via cable, from which it makes it back (also via cable and pins 1 and 3 on J211-1 and J210-3) to tip and barrel of J210-2 and J39 as for (C) above; for those Programmers not needing the Model 211.

For those that do, the interlock is completed via connection from J211-1 pin 5 to jack J211-2, ring, and then via cables and jumpers to J210-4 (ring), J210-2 (ring) and J39 (ring), and finally to Programmer connector J5-23. When jumpered internally to AA, the circuit to Out Lo is completed.

E. "Keepers"

When any cable at the rear of the Models 424, 210 or 211 is opened, the interlock is opened and no Programmer Network can be used to generate a pulse, whether or not that Programmer uses the storage supplied by the auxiliary Energy Storage Unit(s). This safety feature prevents high-voltage pulses from appearing on exposed connector pins. It also insures that the unit won't erroneously generate a pulse with insufficient energy for the wave involved, thereby giving a shorter wave than specified.

The "keeper plug on J210-3 mentioned under (C) above, permits pulsing with no plug in either J210-3 (except the "keeper) or J210-4, for units not needing a Model 211.

If it is necessary to use the Model 424 without either the Model 210 or 211, and it has been outfitted with rear connectors J38 and J39 for use with the Energy Storage Units, then a "keeper" cable must be used to jumper across J38 pin 5 and J39-barrel. It is not ordinarily supplied; consult factory for assistance.

WARNING

Do not insert a probe or wire into J38 pin 5, to try and make the connection -- GREAT

hazard to personnel and equipment will result, and the pin may be permanently damaged.

# MODEL 424

# SURGE GENERATOR/MONITOR

# REPLACEABLE PARTS AND SCHEMATICS

KeyTek Instrument Corp.

Copyright 1991 KeyTek Instrument Corp.
All Rights Reserved

260 Fordham Road
Wilmington, MA 01887

January, 1991

KPS-159

# SECTION 7

# LIST OF REPLACEABLE PARTS

## 7.1 Recommended Major Assemblies for Service and Spares

| Assembly | Suggested Priority |
|---|---|
| Std. extender board, 42-410-100 | 1 |
| Preamp extender cable assy ., 42-410-200 (Requires 42-410-100) | 6 |
| Control & H. V. assy., 42-411-000 | 2 |
| Current assy., 42-413-000 | 4 |
| Voltage assy., 42-415-000 | 5 |
| Input assy., 42-470-000 | 3 |
| Program Readout assy. (Option P only), 42-415-100 | 7 |

## 7.2 List of Recommended Spare Parts(1)

| Quantity | Description | KeyTek Part No. | Mfg. | Part No. |
|---|---|---|---|---|
| | Integrated Circuits - Linear | | | |
| **2 | Op Amp | 05-651-010 | AD | (2)AD301AH |
| **2 | Comparator | 05-651-060 | Nat | (2)LM311H |
| *3 | Op Amp | 05-651-020 | AD | (2)AD518J |
| | Diodes | | | |
| **4 | High Voltage | 03-301-040 | EDI | RK600A |
| *4 | Si. Rect. | 03-301-010 | Mot | IN4004 |
| *4 | Si. Rect. | 03-303-030 | Fair | IN914 |
| *1 | Si. Rect. | 03-303-010 | GE | DE112 |
| 2 | Zener, 3V | 03-305-040 | Mot | IN5225B |
| 2 | Zener, 5.1V | 03-305-060 | Mot | IN5231B |
| 2 | Zener, 6.2V | 03-305-010 | TI | IN821 |
| 2 | Zener, 6.2V | 03-305-070 | Mot | IN5234B |
| 2 | Zener, 6.8V | 03-305-080 | Mot | IN5235B |
| 2 | Zener, 10V | 03-305-100 | Mot | IN5240B |
| 2 | Zener, 20V | 03-305-120 | Mot | IN5250B |
| 2 | Zener, 4.3V | 03-305-050 | Mot | IN5229B |
| 1 | Bridge | 03-301-100 | Mal | FWLC-300 |
| 4 | Si. Rect. | 03-301-030 | Mot | (3)IN4007 |

(1) Manufacturers' code list on last page.
(2) Internal KeyTek modification required prior to shipment.
(3) Required only with installations that include the Model 501; not required for the Model 424 itself.

Recommended Spare Parts -- Continued(1)

| Quantity | Description | KeyTek Part No. | Mfg. | Part No. |
|---|---|---|---|---|
| | Diodes (cont.) | | | |
| 2 | Tranzorb, 6.8V | 09-421-010 | GS | 1.5KE6.8 |
| 1 | Tranzorb, 12V | 09-421-030 | GS | 1.5KE12 |
| | Integrated Circuits - Digital | | | |
| **3 | Quad. Gate | 05-601-010 | TI | SN74L00N |
| **2 | Comparator | 05-601-320 | TI | SN74L85N |
| **1 | Counter | 05-601-350 | TI | SN74L90N |
| **1 | Counter/Latch/Driver | 05-601-410 | TI | SN74144N |
| **2 | Timer | 05-651-180 | Sig | NE555V |
| **2 | Quad Open - Collector Gate | 05-601-120 | TI | 74LS38N |
| **1 | Dual Monostable | 05-601-470 | TI | 74LS221N |

(1) Manufacturers' code list on last page.

Recommended Spare Parts -- Continued[1]

| Quantity | Description | KeyTek Part No. | Mfg. | Part No. |
|---|---|---|---|---|
| | Transistors | | | |
| **4 | PNP | 09-731-010 | GE | GES6017 |
| **4 | NPN | 09-731-020 | GE | GES6016 |
| **3 | PNP | 09-761-020 | TI | 2N2946A |
| **2 | FET | 09-711-080 | Nat | 2N4859 |
| **2 | FET | 09-711-020 | Mot | 2N4416 |
| **2 | NPN | 09-741-020 | Mot | MJE340 |
| **2 | NPN | 09-721-020 | Mot | MPSA42 |
| **2 | PNP | 09-721-080 | Mot | MPSA92 |
| **2 | NPN Darlington | 09-741-080 | KT | EP3060 |
| **2 | PNP Darlington | 09-741-140 | KT | EP3061 |



(1) Manufacturers' code list on last page.

Recommended Spare Parts -- Continued[1]

| Quantity | Description | KeyTek Part No. | Mfg. | Part No. |
|---|---|---|---|---|
| | Misc. Semi-Conductors | | | |
| **1 | Regulator +5V | 05-651-110 | Nat | LM309K |
| **1 | Regulator +15V | 05-651-120 | Nat | LM340K |
| **1 | Regulator -15V | 05-651-130 | Nat | LM320K |
| | Fuses | | | |
| **3 | Slow Blow | 03-903-120 | Buss | [2] 1.5,MDX |
| **3 | Slow Blow | 03-903-150 | Buss | 3A, MDX |
| **4 | Slow Blow | 03-903-100 | Buss | 1A, MDL |
| **4 | Slow Blow | 03-903-020 | Buss | .25A, MDL |
| *1 | Slow Blow | 03-901-120 | Buss | [3] 30A, FNW-30 |
| *1 | Slow Blow | 03-901-010 | Buss | [4] 5A, FNM-5 |



(1) Manufacturers' code list on last page.
(2) For 220V units only. For 120V units, change to 3 additional 3A fuses.
(3) For units with Model 210 or 210 and 211.
(4) For units without either 210 or 211.

Recommended Spare Parts -- Continued(1)

| Quantity | Description | KeyTek Part No. | Mfg. | Part No. |
|---|---|---|---|---|
| | **Indicators** | | | |
| *1 | Neon | 04-901-130 | Alco | BIM-1B |
| *1 | Medium Green Incandes. | 04-901-020 | DD | 44-DD07-NGO |
| *1 | Large Green, Incandes. | 04-901-010 | DD | 464-DD07-NGO |
| *1 | 7 Seg. Display | 04-901-201 | IEE | (2)LR1737R |
| *1 | ± Display | 04-901-211 | IEE | (2)LR1739R |
| *1 | Led, Red | 04-901-050 | Nat | NSL-5053 |
| *1 | Led, Amber | 04-901-040 | DD | 125-A |
| *1 | Led, Red Medium | 04-901-060 | DD | 44-BR2-NRO |
| *1 | Led, Red Large | 04-901-070 | DD | 464-BR2-NRO |
| | **Relays** | | | |
| 1 | SPST, Mercury Plunger NO (Tube Only) | NON-LS | | 07-241-010-42 |
| 1 | SPST, Mercury Plunger NO (Tube Only) (For units with Option S) | LS | | 07-241-010-44 |
| 1 | SPST, Mercury Plunger NO (Tube Only) | (Part of KT 14-000-048) | | |
| 1 | SPST, Mercury Plunger NC (Tube Only) | (Part of KT 14-000-148) | | |
| 1 | SPDT, Mercury WET | 07-251-020 | Mag | W133MPCX-65 |
| 1 | SPST, Mercury WET | 07-251-010 | MAG | W132MPCX-5 |
| 4 | REED, Relays | 42-423-139 | KT | |
| *2 | SPST, Relays, DIP NO | 07-211-020 | EIS | (3)DL1A24-48D |

(1) Manufacturers' code list on last page.
(2) Internal KeyTek modification required prior to shipment.
(3) Required only with installations that include the Model 501; not required for the Model 424 itself.

Recommended Spare Parts -- Continued(1)

| Quantity | Description | KeyTek Part No. | Mfg. | Part No. |
|---|---|---|---|---|
| | Switches | | | |
| 1 | Thermal | 08-701-010 | TI | 7BTL3B-11 |
| 1 | Tilt Switch | 08-461-030 | MS | 7MP21-1 |
| 2 | Paddle | 08-401-150 | C & K | 7208J91ZGE |



(1) Manufacturers' code list on last page.

Manufacturers' Codes

| Manufacturer | Code |
|---|---|
| Alco | Alco |
| Analog Devices | AD |
| Airpax Electronics | AI |
| Bussman | Buss |
| Chicago Miniature | CM |
| Data Display | DD |
| Dialight | Dial |
| Electronic Devices Inc. | EDI |
| Electronic Instrument & Specialty Co. | EIS |
| Fairchild | Fair |
| General Electric | GE |
| Gen'l Instrument | GI |
| Gen'l Semiconductor | GS |
| Industrial Electronic Engineers | IEE |
| KeyTek | KT |
| Littlefuse | LF |
| Magnecraft | Mag |
| Mallory | Mal |
| Microswitch | MS |
| Motorola | Mot |
| National Semiconductor | Nat |
| Raytheon | Ray |
| Rotron | Rot |
| Signetics | Sig |
| Texas Instruments | TI |
| Unitrode | Un |

# REPLACEABLE PARTS LISTS


| | page |
|---|---|
| Main Assembly 42-400-000 | 7-9 |
| Front Panel 42-400-010 | 7-12 |
| Front Panel Board 42-423-200 | 7-13 |
| Regulators 42-421-000 | 7-15 |
| Control and High Voltage Assembly 42-411-000 | 7-19 |
| Voltage Assembly 42-415-000 | 7-28 |
| Voltage Assembly (Option P Only) 42-415-000 | 7-35 |
| Program/Readout Assembly 42-415-100 | 7-37 |
| Connector Board 42-423-500 | 7-43 |
| Current Assembly 42-413-000 | 7-45 |
| Preamps 42-417-100 | 7-54 |
| Input Network KA1 42-417-300 | 7-62 |
| Measurement 42-417-200 | 7-64 |
| Current Transducer and Board 42-435-000 | 7-66 |
| Programmer Delay 42-423-700 | 7-68 |
| Programmer Networks (As Supplied): | |
| PN241 | 7-241-1 |
| PN242,PN244 | 7-242/244-1 |
| PN243 | 7-243-1 |
| PN246 | 7-246-1 |
| PN247 | 7-247-1 |
| PN248 | 7-248-1 |
| PN249 | 7-249-1 |
| PN250 | 7-250-1 |
| PN251 | 7-251-1 |

REPLACEABLE PARTS LISTS (continued)


| | page |
|---|---|
| PN261 | 7-261-1 |
| PN282 | 7-282-1 |
| PN283 | 7-283-1 |

## Table of Replaceable Parts

MAIN ASSEMBLY 42-400-000

| Symbol | Description | Part No. | Mfg. |
|---|---|---|---|
| | **Capacitors** | | |
| C1 | Cer., .04uf, 500V | 5HKS40 | Sprague |
| C2 | Cer., .04uf, 500V | 5HKS40 | Sprague |
| C3 | Mylar, .047uf, 100V | 225P47391WD3 | Sprague |
| C4 | Mylar, .047uf, 100V | 225P47391WD3 | Sprague |
| C5* | Mylar, .047uf, 100V | 225P47391WD3 | Sprague |
| C6 | Mylar, .047uf, 400V | WMF4547 | CDE |
| C19* | Mylar, .047uf, 100V | 225P47391WD3 | Sprague |
| C24 | Mylar, .068uf, 600V | WMF6568 | CDE |
| C25 | Mylar, .047uf, 100V | 225P47391WD3 | Sprague |
| C27 | Energy Storage, 10uf, 2KV | 30P1 | Sprague |
| C28 | Energy Storage, 35uf, 2KV | 30P4 | Sprague |
| C29 | Energy Storage, 25uf, 2.5KV | 30P13 | Sprague |
| C30 | High Voltage, .02uf, 10KV | LQ100-203V | Plastic Caps |
| C32 | Cer., .01uf, 100V | TA110 | Mallory |
| C33 | Cer., .01uf, 100V | TA110 | Mallory |
| C34 | Cer., .002uf, 6KV | DD60-20 | Centralab |
| C35 | Cer., .002uf, 6KV | DD60-20 | Centralab |
| C36 | Cer., .002uf, 6KV | DD60-20 | Centralab |
| C37 | Cer., .002uf, 6KV | DD60-20 | Centralab |
| C38 | Cer., .002uf, 6KV | DD60-20 | Centralab |

* Supplied with Option P only.

MAIN ASSEMBLY 42-400-000 Continued

| Symbol | Description | Part No. | Mfg. |
|---|---|---|---|
| | **Diodes** | | |
| D1 | Si. Rect. | 1N4004 | Motorola |
| D2 | Si. Rect. | 1N4004 | Motorola |
| D3* | Si. Rect. | 1N4004 | Motorola |
| D4* | Si. Rect. | 1N4004 | Motorola |
| D5 | Si. Rect. | 1N4004 | Motorola |
| | **Fuses** | | |
| F1 | 3 Amp., SB | MDX3 | Buss (125V) |
| | (1.5 Amp, 250V, for 220V AC Line) | (MDX 1.5) | Buss (250V) |
| F2 | 3 Amp., SB | MDX3 | Buss (125V) |
| F3 | 5 Amp., SB | FNM5 | Buss |
| | (F3 is 30 Amp., FNM30, when Model 210 or Models 210 and 211 are supplied) | (FNM30) | |
| | **Connectors** | | |
| J14 | Connector Assembly, Voltage Selecting and Fused with Filter | 6J4 | Corcom |
| | **Relays** | | |
| K5 | SPST Form A NON-LS | 07-241-010-42 | |
| K5 | SPST Form A LS (For units with Option S) | 07-241-010-44 | |
| | SPST Form A | 42-423-106-02 | |
| | SPST Form B | 42-423-106-11 | |
| | SPST Form B | 42-423-106-12 | |

* Supplied with Option P only.

MAIN ASSEMBLY 42-400-000 Continued

| Symbol | Description | Part No. | Mfg. |
|---|---|---|---|
| | **Resistors** | | |
| | **All Values in Ohms.** | | |
| | **All Res. Carb. Comp. ±5%. Unless noted otherwise.** | | |
| R1 | 68, 1W | RC32 | |
| R2 | 10, 1W | RC32 | |
| R3* | 10, 1W | RC32 | |
| R4 | 10, 1W | RC32 | |
| R9A | Power, 100, 50W, N.I. | Type 4B | RES Inc. |
| R9B | Power, 100, 50W, N.I. | Type 4B | RES Inc. |
| R10 | 1K, 25W | Type 2B | RES Inc. |
| R20* | 68, 1W | RC32 | |
| R23 | 68, 1W | RC32 | |
| R24 | 68, 1W | RC32 | |
| R28 | 10, 2W | RC42 | |
| R33 | 10, 2W | RC42 | |
| | **Transformers** | | |
| T1 | Power | T417 | KeyTek |
| T2 | High Voltage | T416 | KeyTek |

* Supplied with Option P only.

## Table of Replaceable Parts

FRONT PANEL 42-400-010

| Symbol | Description | Part No. | Mfg. |
|---|---|---|---|
| | **Meters** | | |
| M1 | Peak Volts | 42-423-145 | KeyTek |
| | **Indicators** | | |
| PL1 | Neon | B1M-1B | Alco |
| PL2 | Led, Red Medium | 44-R2-NR0-BX | Data Display |
| PL3 | Inc., Green Medium | 44-DD07-NG0 | Data Display |
| PL4 | Led, Red Large | 464-R2-NR0-BX | Data Display |
| PL5 | Inc., Green Large | 464-DD07-NG0 | Data Display |
| PL6 | Led, Red Large | 464-R2-NR0-BX | Data Display |
| PL7 | Inc., Green Large | 464-DD07-NG0 | Data Display |
| PHV | Led, Red Large | 464-R2-NR0-BX | Data Display |
| | **Switches** | | |
| S3 | Line, Lighted | 2600R11E | Arrow/Hart |
| S4 | Lever | 7208J91ZGE | C & K |
| S5 | Lever | 7208J91ZGE | C & K |
| | **Transformers** | | |
| T3 | Variac | Type 10C | Superior |

## Table of Replaceable Parts

FRONT PANEL BOARD 42-423-200

| Symbol | Description | Part No. | Mfg. |
|---|---|---|---|
| | **Diodes** | | |
| D1 | Si. Rect. | 1N4004 | Motorola |
| D2 | Si. Rect. | 1N4004 | Motorola |
| D3 | Si. Rect. | 1N4004 | Motorola |
| D4 | Si. Rect. | 1N4004 | Motorola |
| D5 | Si. Rect. | 1N4004 | Motorola |
| D6 | Silicon Avalanche Device | 1.5KE6.8 | Gen'l Semi |
| D7 | Silicon Avalanche Device | 1.5KE6.8 | Gen'l Semi |
| | **Indicators** | | |
| PI1 | 7 Seg. Display | DL-707* | Litronix |
| PI2 | 7 Seg. Display | DL-707* | Litronix |
| PI3 | 7 Seg. Display | DL-707* | Litronix |
| PI4 | ± Display | DL-701* | Litronix |
| PL10 | Led, Orange | 125-A | Data Display |
| PL11 | Led, Orange | 125-A | Data Display |
| PL12 | Led, Orange | 125-A | Data Display |
| PL13 | Led, Orange | 125-A | Data Display |
| PL14 | Led, Red | NSL-5053 | National |
| PV1 | 7 Seg. Display | DL-707* | Litronix |
| PV2 | 7 Seg. Display | DL-707* | Litronix |
| PV3 | 7 Seg. Display | DL-707* | Litronix |
| PV4 | ± Display | DL-701* | Litronix |

* Except KeyTek modification required.

FRONT PANEL BOARD 42-423-200 Continued

| Symbol | Description | Part No. | Mfg. |
|---|---|---|---|
| | **Resistors** | | |
| | All Values in Ohms.<br>All Res. Carb. Comp. ±5%. Unless noted otherwise. | | |
| R11 | 22K, 1/4W | RC07 | |
| R12 | 22K, 1/4W | RC07 | |
| R13 | 22K, 1/4W | RC07 | |
| R14 | 22K, 1/4W | RC07 | |
| R15 | 22K, 1/4W | RC07 | |
| R16 | 150, 1/4W | RC07 | |
| | **Switches** | | |
| S1/S2 | Dual | 42-423-171 | KeyTek |
| S3 | Single | 42-423-169 | KeyTek |
| S4 | Single | 42-423-169 | KeyTek |

## Table of Replaceable Parts

REGULATORS 42-421-000

| Symbol | Description | Part No. | Mfg. |
|---|---|---|---|
| | **Capacitors** | | |
| C7 | Elect., 1300uf, 100V | 36D132G100AC2A | Sprague |
| C8 | Alum. Elect., 10uf, 50V | TE-1304 | Sprague |
| C9 | Alum. Elect., 10uf, 50V | TE-1304 | Sprague |
| C10 | Alum. Elect., 10uf, 50V | TE-1304 | Sprague |
| C11 | Alum. Elect., 10uf, 50V | TE-1304 | Sprague |
| C12 | Elect., 750uf, 40V | 39D757G040GL4 | Sprague |
| C13 | Elect., 750uf, 40V | 39D757G040GL4 | Sprague |
| C14 | Elect., 5500uf, 25V | 36D552G025AB2A | Sprague |
| C15 | Mylar, 0.1uf, 200V | 192P10492 | Sprague |
| C16 | Mylar, 0.1uf, 200V | 192P10492 | Sprague |
| C17 | Mylar, .22uf, 80V | 192P2249RB | Sprague |
| C18 | Mylar, .22uf, 80V | 192P2249RB | Sprague |
| C19 | Mylar, .068uf, 600V | WMF6568 | CDE |
| C20 | Cer., 0.1uf, 12V | 5655-000-Y5F0-104M | Erie |
| C21 | Cer., 0.1uf, 12V | 5655-000-Y5F0-104M | Erie |
| C22 | Cer., 0.1uf, 12V | 5655-000-Y5F0-104M | Erie |
| C23 | Cer., 0.1uf, 12V | 5655-000-Y5F0-104M | Erie |
| C26 | Cer., 0.1uf, 12V | 5655-000-Y5F0-104M | Erie |
| | **Rectifier Assemblies** | | |
| CR1 | Rect. Assembly | FWLC-300 | Mallory |
| CR2 | Rect. Assembly | FWLC-300 | Mallory |

REGULATORS 42-421-000 Continued

| Symbol | Description | Part No. | Mfg. |
|---|---|---|---|
| | **Diodes** | | |
| D1 | Zener, 6.8V | 1N5235B | Fairchild |
| D2 | Si. Rect. | 1N4004 | Motorola<br>Fairchild |
| D9 | Si. Rect. | 1N4004 | Motorola |
| D10 | Si. Rect. | 1N4004 | Motorola |
| D11 | Si. Rect. | 1N4004 | Motorola |
| D12 | Si. Rect. | 1N4004 | Motorola |
| D13 | Si. Rect. | 1N4004 | Motorola |
| D14 | Si. Rect. | 1N4004 | Motorola |
| D17 | Zener, 6.2V | 1N5234B | Fairchild |
| D18 | Zener, 6.2V | 1N5234B | Fairchild |
| D19 | Zener, 20V | 1N5250B | Fairchild |
| D20 | Zener, 20V | 1N5250B | Fairchild |
| D21 | Zener, 6.2V | 1N5234B | Fairchild |
| D22 | Zener, 6.2V | 1N5234B | Fairchild |
| D25 | Zener, 10V | 1N5240B | Fairchild |
| D30 | Si. Rect. | 1N4004 | Motorola |
| | **Fuses** | | |
| F4 | 1 Amp. | MDL1 | Bussman |
| F5 | .25 Amp. | MDL1/4 | Bussman |
| F6 | .25 Amp. | MDL1/4 | Bussman |
| F7 | 1 Amp. | MDL1 | Bussman |
| F8 | 1 Amp. | MDL1 | Bussman |

REGULATORS 42-421-000 Continued

| Symbol | Description | Part No. | Mfg. |
|---|---|---|---|
| | **Transistors** | | |
| Q1 | SCR | 2N4441 | Motorola |
| Q2 | SCR | 2N4441 | Motorola |
| Q3 | SCR | 2N4441 | Motorola |
| Q4 | SCR | 2N4441 | Motorola |
| Q5 | SCR | 2N4441 | Motorola |
| | **Resistors** | | |
| | All Values in Ohms. | | |
| | All Res. Carb. Comp. ±5%. Unless noted otherwise. | | |
| R1 | 33K, 2W | RC42 | |
| R2 | 100, 1/4W | RC07 | |
| R3 | 100, 1/4W | RC07 | |
| R4 | 100, 1/4W | RC07 | |
| R5 | 100, 1/4W | RC07 | |
| R6 | 100, 1/4W | RC07 | |
| R7 | 68, 1W | RC32 | |
| R16 | 1K, 1/4W | RC07 | |
| R17 | 1K, 1/4W | RC07 | |
| R18 | 1K, 1/4W | RC07 | |
| R19 | 1K, 1/4W | RC07 | |
| R25 | Power, 0.1, 10W | MZ10 | Memcor |
| R26 | Power, 0.1, 10W | MZ10 | Memcor |
| R27 | Power, 0.1, 10W | MZ10 | Memcor |
| R28 | Power, 0.1, 10W | MZ10 | Memcor |
| R29 | Power, 0.1, 10W | MZ10 | Memcor |
| R30 | 1K, 1/4W | RC07 | |
| R31 | 4.7K, 1/4W | RC07 | |

REGULATORS 42-421-000 Continued

| Symbol | Description | Part No. | Mfg. |
|---|---|---|---|
| | **Integrated Circuits - Linear** | | |
| REG1 | Regulator | LM340-15 | National |
| REG2 | Regulator | LM320-15 | National |
| REG3 | Regulator | LM309K | National |
| REG4 | Regulator | LM309K | National |
| | **Switches** | | |
| S1 | Tilt | 7MP21-1 | Honeywell |
| S2 | Tilt | 7MP21-1 | Honeywell |
| S3 | Tilt | 7MP21-1 | Honeywell |
| S4 | Tilt | 7MP21-1 | Honeywell |
| S11 | Thermal | 20700L-111-774-L167-3 | TI |

## Table of Replaceable Parts

CONTROL AND HIGH VOLTAGE ASSEMBLY 42-411-000

| Symbol | Description | Part No. | Mfg. |
|---|---|---|---|
| | **Capacitors** | | |
| C1 | Solid Tantalum, 4.7uf, 35V | 150D475X9035B2 | Sprague |
| C2 | Solid Tantalum, 33uf, 10V | 150D336X9010B2 | Sprague |
| C3 | Solid Tantalum, 4.7uf, 35V | 150D475X9035B2 | Sprague |
| C4 | Solid Tantalum, 33uf, 10V | 150D336X9010B2 | Sprague |
| C5 | Epoxy Tantalum, 39uf, 10V | 196D396X9010KA1 | Sprague |
| C6 | Epoxy Tantalum, 2.2uf, 25V | 196D225X9025MA1 | Sprague |
| C7 | Epoxy Tantalum, 2.2uf, 25V | 196D225X9025MA1 | Sprague |
| C8 | Epoxy Tantalum, 6.8uf, 25V | 196D685X9025JA1 | Sprague |
| C9 | Epoxy Tantalum, 39uf, 10V | 196D396X9010KA1 | Sprague |
| C10 | Epoxy Tantalum, 39uf, 10V | 196D396X9010KA1 | Sprague |
| C11 | Epoxy Tantalum, 6.8uf, 25V | 196D685X9025JA1 | Sprague |
| C12 | Epoxy Tantalum, 6.8uf, 25V | 196D685X9025JA1 | Sprague |
| C13 | Cer., .02uf | 5835-000-Y5U0-203Z | Erie |
| C14 | Cer., .1uf, 12V | 5655-000-Y5F0-104M | Erie |
| C15 | Epoxy Tantalum, 68uf | 196D686X9006KA1 | Sprague |
| C16 | Epoxy Tantalum, 68uf | 196D686X9006KA1 | Sprague |
| C17 | Solid Tantalum, 4.7uf, 35V | 150D475X9035B2 | Sprague |
| C18 | Mylar, 1uf, 200V | MMW2W1 | CDE |
| C19 | Mylar, .1uf, 200V | 192P10492 | Sprague |
| C20 | Mylar, .047uf, 100V | 225P47391WD3 | Sprague |
| C21 | Mylar, .047uf, 100V | 225P47391WD3 | Sprague |
| C22 | Epoxy Tantalum, 220uf, 4V | 196D227X9004LA3 | Sprague |
| C23 | Epoxy Tantalum, 220uf, 4V | 196D227X9004LA3 | Sprague |
| C24 | 4.7uf, 35V | 196D475X9035JA1 | Sprague |
| C25 | Epoxy Tantalum, 6.8uf, 25V | 196D685X9025JA1 | Sprague |
| C30 | Mica, 220pf | CD15FD221J03 | CDE |
| C31 | Mica, 220pf | CD15FD221J03 | CDE |

CONTROL AND HIGH VOLTAGE ASSEMBLY 42-411-000 Continued

| Symbol | Description | Part No. | Mfg. |
|---|---|---|---|
| | **Diodes** | | |
| D1 | Si. Signal | 1N914 | Fairchild |
| D2 | Si. Signal | 1N914 | Fairchild |
| D3 | Si. Signal | 1N914 | Fairchild |
| D4 | Si. Rect. | 1N4004 | Motorola |
| D5 | Si. Signal | 1N914 | Fairchild |
| D6 | Zener, 3V | 1N5225B | Motorola |
| D7 | Zener, 3V | 1N5225B | Motorola |
| D8 | Si. Signal | 1N914 | Fairchild |
| D9 | Si. Signal | 1N914 | Fairchild |
| D10 | Si. Signal | 1N914 | Fairchild |
| D11 | Si. Signal | 1N914 | Fairchild |
| D12 | Si. Signal | 1N914 | Fairchild |
| D13 | Si. Rect. | 1N4004 | Motorola |
| D14 | Si. Rect. | 1N4004 | Motorola |
| D15 | Zener, 5.1V | 1N5231B | Motorola |
| D16 | Si. Signal | 1N914 | Fairchild |
| D17 | Si. Signal | 1N914 | Fairchild |
| D18 | Si. Signal | 1N914 | Fairchild |
| D19 | Si. Rect. | 1N4004 | Motorola |
| D20 | Si. Rect. | 1N4004 | Motorola |
| D21 | Zener, 4.3V | 1N5229B | Motorola |
| D22 | Si. Signal | 1N914 | Fairchild |
| D23 | Si. Signal | 1N914 | Fairchild |
| D24 | Si. Signal | 1N914 | Fairchild |
| D25 | Si. Signal | 1N914 | Fairchild |
| D26 | Si. Rect. | 1N4004 | Motorola |
| D27 | Si. Rect. | 1N4004 | Motorola |
| D34 | Si. Signal | 1N914 | Fairchild |
| D35 | Si. Signal | 1N914 | Fairchild |
| D36 | Zener, 3V | 1N5225B | Motorola |

CONTROL AND HIGH VOLTAGE ASSEMBLY 42-411-000 Continued

| Symbol | Description | Part No. | Mfg. |
|---|---|---|---|
| D37 | Si. Signal | 1N914 | Fairchild |
| D38 | Si. Signal | 1N914 | Fairchild |
| D39 | Si. Signal | 1N914 | Fairchild |
| D40 | Si. Signal | 1N914 | Fairchild |
| D41 | Si. Signal | 1N914 | Fairchild |
| D42 | Si. Signal | 1N914 | Fairchild |
| D43 | Si. Signal | 1N914 | Fairchild |
| D44 | Si. Signal | 1N914 | Fairchild |
| D45 | Si. Signal | 1N914 | Fairchild |
| D46 | High Voltage | RK600A | EDI |
| D47 | High Voltage | RK600A | EDI |
| D48 | High Voltage | RK600A | EDI |
| D49 | High Voltage | RK600A | EDI |
| D50 | Si. Rect. | 1N4004 | Motorola |
| D51 | Si. Rect. | 1N4004 | Motorola |
| D55 | Silicon Avalanche Device | 1.5KE6.8 | Gen'l Semi |
| | **Relays** | | |
| K1 | 1 PST, Normally Open | 42-423-139* | KeyTek |
| K2 | 1 PST, Normally Open | 42-423-139* | KeyTek |
| K3 | 1 PST, Normally Open | 42-423-139* | KeyTek |
| K4 | 1 PST, Normally Open | 42-423-139* | KeyTek |
| | **Transistors** | | |
| Q1 | NPN | 2N3642 | Fair./Nat. |
| Q2 | NPN | MPS42A | Motorola |
| Q3 | NPN | MJE340 | Motorola |
| Q4 | NPN | 2N3642 | Fair./Nat. |

*On Serial Nos. 101-115, was Siemens V23016A0004-A102; but must be replaced with the KeyTek 42-423-139, with some mounting changes, as the Siemens unit has been redesigned and is no longer suitable in the application.

CONTROL AND HIGH VOLTAGE ASSEMBLY 42-411-000 Continued

| Symbol | Description | Part No. | Mfg. |
|---|---|---|---|
| Q5 | NPN | MPS42A | Motorola |
| Q6 | NPN | MJE340 | Motorola |
| Q7 | PNP | 2N4248 | National |
| Q8 | PNP | 2N4248 | National |
| Q9 | NPN | MPS42A | Motorola |
| Q10 | NPN | MJE340 | Motorola |
| Q11 | NPN | 2N3642 | Fair./Nat. |
| Q12 | NPN | 2N3642 | Fair./Nat. |
| Q13 | PNP | 2N4248 | National |
| Q14 | PNP | 2N4248 | National |
| Q15 | NPN | 2N3642 | Fair./Nat. |
| Q16 | NPN | MPS42A | Motorola |
| Q17 | NPN | MJE340 | Motorola |
| Q18 | NPN | 2N3642 | Fair./Nat. |
| Q19 | PNP | 2N4248 | National |
| Q20 | PNP | 2N4248 | National |
| Q21 | NPN | MPS42A | Motorola |
| Q22 | NPN Darlington | 2N6045 | Motorola |
| Q23 | NPN | MPS42A | Motorola |
| Q24 | NPN Darlington | 2N6045 | Motorola |
| Q25 | NPN | 2N3642 | Fair./Nat. |
| Q26 | NPN | 2N3642 | Fair./Nat. |
| Q27 | NPN | 2N3642 | Fair./Nat. |
| Q28 | NPN | 2N3642 | Fair./Nat. |
| Q29 | NPN | 2N3642 | Fair./Nat. |
| Q30 | NPN | 2N3642 | Fair./Nat. |
| Q31 | NPN | 2N3642 | Fair./Nat. |
| Q32 | NPN | 2N3642 | Fair./Nat. |
| Q33 | PNP | 2N4248 | National |
| Q37 | NPN | 2N3642 | Fair./Nat. |

CONTROL AND HIGH VOLTAGE ASSEMBLY 42-411-000 Continued

| Symbol | Description | Part No. | Mfg. |
|---|---|---|---|
| | **Resistors** | | |
| | All Values in Ohms<br>All Res. Carb. Comp. ±5%. Unless noted otherwise. | | |
| R1 | 47, 1/4W | RC07 | |
| R2 | 6.8K, 1/4W | RC07 | |
| R2A | 3.3, ±10%, 1/4W | RC07 | |
| R3 | Metal Film, 21.5K, ±1% | RN60D | |
| R4 | 3.3K, 1/4W | RC07 | |
| R4A | 3.3, ±10%, 1/4W | RC07 | |
| R5 | 1K, 1/4W | RC07 | |
| R6 | Metal Film, 34.8K, ±1% | RN60D | |
| R7 | 10K, 1/4W | RC07 | |
| R7A | 47K, 1/4W | RC07 | |
| R8 | 3.3K, 1/4W | RC07 | |
| R9 | 47, 1/4W | RC07 | |
| R10 | 47, 1/4W | RC07 | |
| R11 | 6.8K, 1/4W | RC07 | |
| R12 | Metal Film, 21.5K, ±1% | RN60D | |
| R13 | 3.3K, 1/4W | RC07 | |
| R14 | 1K, 1/4W | RC07 | |
| R15 | Metal Film, 34.8K, ±1% | RN60D | |
| R16 | 10K, 1/4W | RC07 | |
| R16A | 47K, 1/4W | RC07 | |
| R17 | 3.3K, 1/4W | RC07 | |
| R18 | 47, 1/4W | RC07 | |
| R19 | 22K, 1/4W | RC07 | |
| R20 | 22K, 1/4W | RC07 | |
| R21 | 47K, 1/4W | RC07 | |
| R22 | 100K, 1/4W | RC07 | |
| R23 | 220, 1/4W | RC07 | |
| R24 | 1.5K, 1/4W | RC07 | |
| R25 | 22K, 1/4W | RC07 | |
| R26 | 22K, 1/4W | RC07 | |

CONTROL AND HIGH VOLTAGE ASSEMBLY 42-411-000 Continued

| Symbol | Description | Part No. | Mfg. |
|---|---|---|---|
| R27 | 3.3K, 1/4W | RC07 | |
| R27A | 33K, 1/4W | RC07 | |
| R28 | 47, 1/4W | RC07 | |
| R29 | Metal Film, 21.5K, ±1% | RN60D | |
| R30 | Metal Film, 21.5K, ±1% | RN60D | |
| R31 | 220K, 1/4W | RC07 | |
| R32 | 220K, 1/4W | RC07 | |
| R33 | 22K, 1/4W | RC07 | |
| R34 | 1K, 1/4W | RC07 | |
| R35 | 4.7K, 1/4W | RC07 | |
| R36 | 220, 1/4W | RC07 | |
| R37 | 1K, 1/4W | RC07 | |
| R38 | Metal Film, 51.1K, ±1% | RN60D | |
| R39 | Metal Film, 21.5K, ±1% | RN60D | |
| R40 | Metal Film, 21.5K, ±1% | RN60D | |
| R41 | 22K, 1/4W | RC07 | |
| R42 | 22K, 1/4W | RC07 | |
| R43 | 47, 1/4W | RC07 | |
| R44 | 10K, 1/4W | RC07 | |
| R45 | 10K, 1/4W | RC07 | |
| R46 | 100K, 1/4W | RC07 | |
| R47 | 220K, 1/4W | RC07 | |
| R48 | 100K, 1/4W | RC07 | |
| R49 | 1K, 1/4W | RC07 | |
| R50 | 6.8K, 1/4W | RC07 | |
| R51 | 100K, 1/4W | RC07 | |
| R54 | 10K, 1/4W | RC07 | |
| R55 | Metal Film, 6.81K, ±1% | RN60D | |
| R56 | 33K, 1/4W | RC07 | |
| R57 | 4.7K, 1/4W | RC07 | |
| R58 | 47, 1/4W | RC07 | |
| R59 | 22K, 1/2W | RC20 | |

CONTROL AND HIGH VOLTAGE ASSEMBLY 42-411-000 Continued

| Symbol | Description | Part No. | Mfg. |
|---|---|---|---|
| R60 | Metal Film, 10K, ±1% | RN60D | |
| R61 | 4.7K, 1/4W | RC07 | |
| R62 | 6.8K, 2W | RC42 | |
| R63 | 6.8K, 2W | RC42 | |
| R64 | 1K, 1/4W | RC07 | |
| R65 | 6.8K, 1/4W | RC07 | |
| R66 | Metal Film, 147K, ±1% | RN60D | |
| R67 | 10K, 1/4W | RC07 | |
| R68 | 3.3K, 1/4W | RC07 | |
| R69 | 3.3, ±10%, 1/4W | RC07 | |
| R70 | 22K, 1/4W | RC07 | |
| R71 | 10K, 1/4W | RC07 | |
| R72 | 22K, 1/2W | RC20 | |
| R73 | 2.2K, 1/4W | RC07 | |
| R74 | 680K, 1/4W | RC07 | |
| R75 | 2.2M, 1/4W | RC07 | |
| R76 | 4.7K, 1/4W | RC07 | |
| R79 | 22K, 1/4W | RC07 | |
| R80 | 2.2K, 1/4W | RC07 | |
| R81 | 10K, 1/4W | RC07 | |
| R82 | 3.3K, 1/4W | RC07 | |
| R83 | 10K, 1/4W | RC07 | |
| R84 | 4.7K, 1/4W | RC07 | |
| R85 | 22K, 1/4W | RC07 | |
| R86 | 1K, 1/4W | RC07 | |
| R87 | 150, 1/4W | RC07 | |
| R88 | 100K, 1/4W | RC07 | |
| R89 | 22K, 1/4W | RC07 | |
| R90 | 22K, 1/4W | RC07 | |
| R91 | 22K, 1/4W | RC07 | |
| R92 | 22K, 1/4W | RC07 | |
| R93 | 2.2K, 1/4W | RC07 | |

CONTROL AND HIGH VOLTAGE ASSEMBLY 42-411-000 Continued

| Symbol | Description | Part No. | Mfg. |
|---|---|---|---|
| R94 | 10, 1/4W | RC07 | |
| R94A | 330, 1/4W | RC07 | |
| R102 | 6.8K, 2W | RC42 | |
| R103 | 6.8K, 2W | RC42 | |
| R104 | 68, ±10%, 1W | RC32 | |
| R105 | 68, ±10%, 1W | RC32 | |
| R106 | Metal Film, 147K, ±1% | RN65D | |
| R108 | Metal Film, 100K, ±1% | RN65D | |
| R109 | Metal Film, 100K, ±1% | RN65D | |
| R110 | Metal Film, 100K, ±1% | RN65D | |
| R111 | Metal Film, 100K, ±1% | RN65D | |
| R112 | Metal Film, 100K, ±1% | RN65D | |
| R113 | Metal Film, 100K, ±1% | RN65D | |
| R114 | Metal Film, 100K, ±1% | RN65D | |
| R115 | Metal Film, 100K, ±1% | RN65D | |
| R116 | Metal Film, 100K, ±1% | RN65D | |
| R117 | Metal Film, 100K, ±1% | RN65D | |
| R118 | Metal Film, 100K, ±1% | RN65D | |
| R119 | Metal Film, 100K, ±1% | RN65D | |
| R120 | Metal Film, 100K, ±1% | RN65D | |
| R121 | Metal Film, 100K, ±1% | RN65D | |
| R122 | Metal Film, 100K, ±1% | RN65D | |
| R123 | Metal Film, 100K, ±1% | RN65D | |
| R124 | 470, 1/4W | RC07 | |
| R126 | 3.3, ±10%, 1/4W | RC07 | |
| R127 | 3.3, ±10%, 1/4W | RC07 | |
| R128 | 10K, 1/4W | RC07 | |
| R129 | 100K, 1/4W | RC07 | |
| R130 | 100, 1/4W | RC07 | |

CONTROL AND HIGH VOLTAGE ASSEMBLY 42-411-000 Continued

| Symbol | Description | Part No. | Mfg. |
|---|---|---|---|
| R131 | 22K, 1/4W | RC07 | |
| R132 | 4.7K, 1/4W | RC07 | |
| R133 | 4.7K, 1/4W | RC07 | |

Table of Replaceable Parts

VOLTAGE ASSEMBLY 42-415-000

| Symbol | Description | Part No. | Mfg. |
|---|---|---|---|
| | **Integrated Circuits - Linear** | | |
| A1 | Op. Ampl. | AD301AH | Analog Devices |
| A2 | Comparator | LM311H | National |
| | **Capacitors** | | |
| C1 | Mylar, 1uf, 100V | TRWX663F | TRW |
| C2 | Mica, 100pf | DM15-101J | CDE |
| C3 | Cer., .05, 25V | 5855-000-Y5U0-505Z | Erie |
| C4 | Cer., .05, 25V | 5855-000-Y5U0-505Z | Erie |
| C5 | Mica, 47pf | DM15-470J | CDE |
| C6 | Cer., .05, 25V | 5855-000-Y5U0-505Z | Erie |
| C7 | Cer., .05, 25V | 5855-000-Y5U0-505Z | Erie |
| C8 | Cer., .05, 25V | 5855-000-Y5U0-505Z | Erie |
| C9 | Mylar, .047uf, 200V | 192P47392 | Sprague |
| C10 | Cer., 0.1uf, 12V | 5655-000-Y5F0-104M | Erie |
| C11 | Cer., .01uf, 100V | 5835-000-Y5U0-103Z | Erie |
| C12 | Cer., .01uf, 100V | 5835-000-Y5U0-103Z | Erie |
| C13 | Cer., .01uf, 100V | 5835-000-Y5U0-103Z | Erie |
| C14 | Solid Tantalum, 4.7uf, 35V | 150D475X 9035B2 | Sprague |
| C15 | Cer., .05, 25V | 5855-000-Y5U0-505Z | Erie |
| C16 | Solid Tantalum, 4.7uf, 35V | 150D475X 9035B2 | Sprague |
| C17 | Cer., .05, 25V | 5855-000-Y5U0-505Z | Erie |
| C18 | Solid Tantalum, 4.7uf, 35V | 150D475X 9035B2 | Sprague |
| C19 | Cer., 0.1uf, 12V | 5655-000-Y5F0-104M | Erie |
| C20 | Epoxy Tantalum, 6.8uf, 25V | 196D685X90 25JA1 | Sprague |
| C21 | Epoxy Tantalum, 39uf, 10V | 196D396X9010 KA1 | Sprague |
| C22 | Cer., 0.1uf, 12V | 5655-000-Y5F0-104M | Erie |
| C23 | Cer., .01uf, 100V | 5835-000-Y5U0-103Z | Erie |

VOLTAGE ASSEMBLY 42-415-000 Continued

| Symbol | Description | Part No. | Mfg. |
|---|---|---|---|
| C24 | Epoxy Tantalum, 6.8uf, 25V | 196D685X90 25JA1 | Sprague |
| C25 | Cer., 0.1uf, 12V | 5655-000-Y5F0-104M | Erie |
| C26 | Cer., .05, 25V | 5855-000-Y5U0-505Z | Erie |
| C27 | Mylar, .001uf, 200V | 192P10292 | Sprague |
| C28 | Cer., 0.1uf, 12V | 5655-000-Y5F0-104M | Erie |
| C81 | Cer., .001uf | 801-000 X5F0102K | Erie |
| C82 | Cer., .01uf, 100V | 5835-000-Y5U0-103Z | Erie |
| C83 | Cer., .01uf, 100V | 5835-000-Y5U0-103Z | Erie |
| C84 | Cer., .01uf, 100V | 5835-000-Y5U0-103Z | Erie |
| C85 | Cer., .05, 25V | 5855-000-Y5U0-505Z | Erie |
| C86 | Cer., .05, 25V | 5855-000-Y5U0-505Z | Erie |
| C87 | Cer., .05, 25V | 5855-000-Y5U0-505Z | Erie |
| C88 | Cer., .05, 25V | 5855-000-Y5U0-505Z | Erie |
| C89 | Cer., .01uf, 100V | 5835-000-Y5U0-103Z | Erie |
| C90 | Cer., .05, 25V | 5855-000-Y5U0-505Z | Erie |
| C91 | Cer., .05, 25V | 5855-000-Y5U0-505Z | Erie |
| C92 | Cer., .05, 25V | 5855-000-Y5U0-505Z | Erie |
| C93 | Solid Tantalum, 33uf, 10V | 150D336X9010B2 | Sprague |
| C94 | Solid Tantalum, 33uf, 10V | 150D336X9010B2 | Sprague |
| C95 | Cer., 0.1uf, 12V | 5655-000-Y5F0-104M | Erie |
| C96 | Cer., 0.1uf, 12V | 5655-000-Y5F0-104M | Erie |
| C100 | Cer., .05, 25V | 5855-000-Y5U0-505Z | Erie |
| C101 | Cer., .05, 25V | 5855-000-Y5U0-505Z | Erie |
| C102 | Cer., .05, 25V | 5855-000-Y5U0-505Z | Erie |
| C103 | Cer., .05, 25V | 5855-000-Y5U0-505Z | Erie |
| C104 | Cer., .05, 25V | 5855-000-Y5U0-505Z | Erie |
| C105 | Cer., .05, 25V | 5855-000-Y5U0-505Z | Erie |
| C106 | Cer., .05, 25V | 5855-000-Y5U0-505Z | Erie |
| C107 | Cer., .05, 25V | 5855-000-Y5U0-505Z | Erie |
| C108 | Cer., .05, 25V | 5855-000-Y5U0-505Z | Erie |
| C109 | Cer., .05, 25V | 5855-000-Y5U0-505Z | Erie |

VOLTAGE ASSEMBLY 42-415-000 Continued

| Symbol | Description | Part No. | Mfg. |
|---|---|---|---|
| C110 | Cer., .05, 25V | 5855-000-Y5U0-505Z | Erie |
| C111 | Cer., .05, 25V | 5855-000-Y5U0-505Z | Erie |
| C112 | Cer., .05, 25V | 5855-000-Y5U0-505Z | Erie |
| C113 | Cer., .05, 25V | 5855-000-Y5U0-505Z | Erie |
| | **Diodes** | | |
| D1 | Si. Signal | 1N914 | Fairchild |
| D2 | Si. Signal | 1N914 | Fairchild |
| D3 | Zener, 5.1V | 1N5231B | Motorola |
| D4 | Si. Signal | 1N914 | Fairchild |
| D5 | Silicon Avalanche Device | 1.5KE6.8 | Gen'l Semi |
| D20 | Si. Signal | 1N914 | Fairchild |
| D21 | Si. Signal | 1N914 | Fairchild |
| D22 | Si. Signal | 1N914 | Fairchild |
| D23 | Si. Signal | 1N914 | Fairchild |
| D24 | Si. Signal | 1N914 | Fairchild |
| | **Integrated Circuits - Digital** | | |
| IC1 | Quad. Gate | SN74L00N | TI |
| IC2 | Quad. Gate | SN74L00N | TI |
| IC3 | Quad. Gate | SN74L00N | TI |
| IC4 | Quad. Gate | SN74L00N | TI |
| IC5 | Quad. Gate | SN74L00N | TI |
| IC6 | Quad. Gate | SN74L00N | TI |
| IC7 | Quad. Gate | SN74L00N | TI |
| IC8 | Timer | NE555V | Signetics |
| IC9 | Comparator | SN74L85N | TI |
| IC10 | Comparator | SN74L85N | TI |

VOLTAGE ASSEMBLY 42-415-000 Continued

| Symbol | Description | Part No. | Mfg. |
|---|---|---|---|
| IC11 | Comparator | SN74L85 | TI |
| IC12 | Quad. Gate | SN74L00N | TI |
| IC13 | Quad. Gate | SN74L00N | TI |
| IC14 | Quad. Gate | SN74L00N | TI |
| IC15 | Spare | SN74L00N | TI |
| IC16 | Quad. Gate | SN74L00N | TI |
| IC17 | Quad. Gate | SN74L00N | TI |
| IC18 | Quad. Gate | SN74L00N | TI |
| IC20 | Counter/Latch/Driver | SN74144N | TI |
| IC21 | Counter/Latch/Driver | SN74144N | TI |
| IC22 | Counter/Latch/Driver | SN74144N | TI |
| IC23 | Counter/Latch/Driver | SN74144N | TI |
| | Transistors | | |
| Q1 | PNP | 2N2946A | Raytheon |
| Q2 | PNP | 2N2946A | Raytheon |
| Q3 | PNP | 2N2946A | Raytheon |
| Q4 | PNP | 2N4248 | National |
| Q5 | NPN | 2N3642 | Fair./Nat. |
| Q6 | PNP | 2N4248 | National |
| Q7 | NPN | 2N3642 | Fair/Nat. |
| Q8 | NPN | 2N3642 | Fair./Nat. |
| Q9 | NPN | 2N3642 | Fair./Nat. |
| Q10 | NPN | 2N3642 | Fair./Nat. |
| Q11 | NPN | 2N3642 | Fair./Nat. |
| Q12 | NPN | 2N3642 | Fair./Nat. |
| Q13 | NPN | 2N3642 | Fair./Nat. |
| Q14 | NPN | 2N3642 | Fair./Nat. |

VOLTAGE ASSEMBLY 42-415-000 Continued

| Symbol | Description | Part No. | Mfg. |
|---|---|---|---|
| | **Resistors** | | |
| | All Values in Ohms<br>All Res. Carb. Comp. ±5%. Unless noted otherwise. | | |
| R1 | Metal Film, 21.5K, ±1% | RN60D | |
| R2 | 3.3K, 1/4W | RC07 | |
| R3 | 47, 1/4W | RC07 | |
| R4 | 47, 1/4W | RC07 | |
| R5 | Metal Film, 10K, ±1% | RN60D | |
| R6 | Metal Film, 10K, ±1% | RN60D | |
| R7 | Metal Film, 10K, ±1% | RN60D | |
| R8 | Metal Film, 51.1K, ±1% | RN60D | |
| R9 | Metal Film, 100K, ±1% | RN60D | |
| R10 | Metal Film, 100K, ±1% | RN60D | |
| R11 | Metal Film, 2M, ±1% | RN65D | |
| R12 | Metal Film, 1K, ±1% | RN60D | |
| R13 | Metal Film, 348K, ±1% | RN60D | |
| R14 | 47, 1/4W | RC07 | |
| R15 | 47, 1/4W | RC07 | |
| R16 | Potentiometer, 20K | Helitrim 89PR20K | Beckman |
| R17 | 47, 1/4W | RC07 | |
| R18 | 1K, 1/4W | RC07 | |
| R19 | Potentiometer, 20K | Helitrim 89PR20K | Beckman |
| R20 | Potentiometer, 20K | Helitrim 89PR20K | Beckman |
| R21 | Metal Film, 1K, ±1% | RN60D | |
| R22 | 22K, 1/4W | RC07 | |
| R23 | 27K, 1/4W | RC07 | |
| R24 | 4.7K, 1/4W | RC07 | |
| R25 | 4.7K, 1/4W | RC07 | |
| R26 | 22K, 1/4W | RC07 | |
| R27 | 10K, 1/4W | RC07 | |
| R28 | 10K, 1/4W | RC07 | |

VOLTAGE ASSEMBLY 42-415-000 Continued

| Symbol | Description | Part No. | Mfg. |
|---|---|---|---|
| R29 | 3.3K, 1/4W | RC07 | |
| R30 | 100K, 1/4W | RC07 | |
| R31 | 220K, 1/4W | RC07 | |
| R32 | 150K, 1/4W | RC07 | |
| R33 | 150K, 1/4W | RC07 | |
| R34 | 470K, 1/4W | RC07 | |
| R35 | 470K, 1/4W | RC07 | |
| R36 | 22K, 1/4W | RC07 | |
| R37 | 2.2K, 1/4W | RC07 | |
| R38 | 150, 1/4W | RC07 | |
| R39 | 2.2K, 1/4W | RC07 | |
| R40 | 10, 1/4W | RC07 | |
| R40A | 330, 1/4W | RC07 | |
| R41 | 10, 1/4W | RC07 | |
| R42 | 10, 1/4W | RC07 | |
| R43 | 3.3, ±10%, 1/4W | RC07 | |
| R44 | 100K, 1/4W | RC07 | |
| R45 | 150, 1/4W | RC07 | |
| R46 | 22K, 1/4W | RC07 | |
| R47 | 10K, 1/4W | RC07 | |
| R48 | 100K, 1/4W | RC07 | |
| R49 | 10K, 1/4W | RC07 | |
| R50 | 10K, 1/4W | RC07 | |
| R51 | Metal Film, 51.1K, ±1% | RN60D | |
| R52 | Metal Film, 51.1K, ±1% | RN60D | |
| R53 | 68K, 1/4W | RC07 | |
| R54 | 22K, 1/4W | RC07 | |
| R55 | 4.7K, 1/4W | RC07 | |
| R98 | 1K, 1/4W | RC07 | |
| R99 | 2.2K, 1/4W | RC07 | |
| R100 | 3.3K, 1/4W | RC07 | |
| R101 | 470, 1/4W | RC07 | |
| R102 | 470, 1/4W | RC07 | |

VOLTAGE ASSEMBLY 42-415-000 Continued

| Symbol | Description | Part No. | Mfg. |
|---|---|---|---|
| RV1-2 thru RV1-6 | Pack, 1K, (Sip) | 7531216CH102X5PD | Sprague |
| RV2-2 thru RV2-8 | Pack, 1K, (Sip) | 7531216CH102X5PD | Sprague |
| RV3-3 thru RV3-7 | Pack, 150, (Dip) | 760-3-R150 | CTS |
| RV4-1 thru RV4-7 | Pack, 150, (Dip) | 760-3-R150 | CTS |
| RV5-1 thru RV5-7 | Pack, 150, (Dip) | 760-3-R150 | CTS |
| RV6-1 thru RV6-7 | Pack, 150, (Dip) | 760-3-R150 | CTS |

## Table of Replaceable Parts

VOLTAGE ASSEMBLY (OPTION P ONLY) 42-415-000

| Symbol | Description | Part No. | Mfg. |
|---|---|---|---|
| | **Capacitors** | | |
| C120 | Epoxy Tantalum, 6.8uf, 25V | 196D685X90 25JA1 | Sprague |
| C121 | Epoxy Tantalum, 39uf, 10V | 196D396X9010 KA1 | Sprague |
| | **Diodes** | | |
| D100 | Si. Signal | 1N914 | Fairchild |
| | **Integrated Circuits - Digital** | | |
| IC15 | Quad. Gate | SN74L00N | TI |
| IC24 | Quad. Gate | SN74L00N | TI |
| IC25 | Quad. Gate | SN74L00N | TI |
| IC26 | Hex Inverter | SN74L04N | TI |
| IC27 | Quad. Gate | SN74L00N | TI |
| IC28 | Quad. Gate | SN74L00N | TI |
| IC29 | Hex Inverter | SN74L04N | TI |
| | **Transistors** | | |
| Q101 | PNP | 2N4248 | National |
| Q102 | PNP | 2N4248 | National |

CURRENT ASSEMBLY 42-413-000 Continued

| Symbol | Description | Part No. | Mfg. |
|---|---|---|---|
| C62 | Epoxy Tantalum, 39uf, 10V | 196D396X9010KA1 | Sprague |
| C63 | Cer., 0.1uf, 12V | 5655-000-Y5F0-104M | Erie |
| C64 | Cer., .05uf, 25V | 5855-000-Y5U0-503Z | Erie |
| C65 | Cer., .05uf, 25V | 5855-000-Y5U0-503Z | Erie |
| C66 | Cer., .05uf, 25V | 5855-000-Y5U0-503Z | Erie |
| C67 | Cer., .05uf, 25V | 5855-000-Y5U0-503Z | Erie |
| C68 | Cer., .05uf, 25V | 5855-000-Y5U0-503Z | Erie |
| C69 | Cer., .05uf, 25V | 5855-000-Y5U0-503Z | Erie |
| C70 | Cer., .05uf, 25V | 5855-000-Y5U0-503Z | Erie |
| C71 | Cer., .05uf, 25V | 5855-000-Y5U0-503Z | Erie |
| C72 | Cer., .05uf, 25V | 5855-000-Y5U0-503Z | Erie |
| C73 | Cer., .05uf, 25V | 5855-000-Y5U0-503Z | Erie |
| C74 | Cer., .05uf, 25V | 5855-000-Y5U0-503Z | Erie |
| C81 | Cer., .001uf | 801-000-X5F0-102K | Erie |
| C82 | Cer., .01uf, 100V | TA110 | Mallory |
| C83 | Cer., .01uf, 100V | TA110 | Mallory |
| C84 | Cer., .01uf, 100V | TA110 | Mallory |
| C85 | Cer., .05uf, 25V | 5855-000-Y5U0-503Z | Erie |
| C86 | Cer., .05uf, 25V | 5855-000-Y5U0-503Z | Erie |
| C87 | Cer., .05uf, 25V | 5855-000-Y5U0-503Z | Erie |
| C88 | Cer., .05uf, 25V | 5855-000-Y5U0-503Z | Erie |
| C89 | Cer., .01uf, 100V | TA110 | Mallory |
| C90 | Cer., .05uf, 25V | 5855-000-Y5U0-503Z | Erie |
| C91 | Cer., .05uf, 25V | 5855-000-Y5U0-503Z | Erie |
| C92 | Cer., .05uf, 25V | 5855-000-Y5U0-503Z | Erie |
| C93 | Solid Tantalum, 33uf, 10V | 150D336X9010B2 | Sprague |
| C94 | Solid Tantalum, 33uf, 10V | 150D336X9010B2 | Sprague |

CURRENT ASSEMBLY 42-413-000 Continued

| Symbol | Description | Part No. | Mfg. |
|---|---|---|---|
| | **Diodes** | | |
| D1 | Si. Signal | 1N914 | Fairchild |
| D2 | Si. Signal | 1N914 | Fairchild |
| D3 | Zener, 5.1V | 1N5231B | Motorola |
| D4 | Si. Rect. | 1N4004 | Motorola |
| D5 | Si. Rect. | 1N4004 | Motorola |
| D6 | Silicon Avalanche Device | 1.5KE6.8 | Gen'l Semi |
| D9 | Si. Signal | 1N914 | Fairchild |
| D10 | Si. Signal | 1N914 | Fairchild |
| D11 | Si. Signal | 1N914 | Fairchild |
| D12 | Si. Signal | 1N914 | Fairchild |
| D13 | Si. Signal | 1N914 | Fairchild |
| D14 | Zener, 6.2V | 1N821 | TI |
| D15 | Si. Signal | 1N914 | Fairchild |
| D16 | Si. Signal | 1N914 | Fairchild |
| D17 | Si. Signal | 1N914 | Fairchild |
| D20 | Si. Signal | 1N914 | Fairchild |
| D21 | Si. Signal | 1N914 | Fairchild |
| D22 | Si. Rect. | 1N4004 | Motorola |
| | **Integrated Circuits - Digital** | | |
| IC1 | Quad. Gate | SN74L00N | TI |
| IC2 | Quad. Gate | SN74L00N | TI |
| IC3 | Quad. Gate | SN74L00N | TI |
| IC4 | Quad. Gate | SN74L00N | TI |
| IC5 | Quad. Gate | SN74L00N | TI |
| IC6 | Quad. Gate | SN74L00N | TI |
| IC7 | Quad. Gate | SN74L00N | TI |
| IC8 | Quad. Gate | SN74L00N | TI |

CURRENT ASSEMBLY 42-413-000 Continued

| Symbol | Description | Part No. | Mfg. |
|---|---|---|---|
| IC9 | Comparator | SN74L85N | TI |
| IC10 | Comparator | SN74L85N | TI |
| IC11 | Comparator | SN74L85N | TI |
| IC12 | Quad. Gate | SN74L00N | TI |
| IC13 | Quad. Gate | SN74L00N | TI |
| IC14 | Quad. Gate | SN74L00N | TI |
| IC15 | Spare | | |
| IC16 | Quad. Gate | SN74L00N | TI |
| IC17 | Quad. Gate | SN74L00N | TI |
| IC18 | Counter | SN74L90N | TI |
| IC19 | Quad. Gate | SN74L00N | TI |
| IC20 | Counter/Latch/Driver | SN74144N | TI |
| IC21 | Counter/Latch/Driver | SN74144N | TI |
| IC22 | Counter/Latch/Driver | SN74144N | TI |
| IC23 | Counter/Latch/Driver | SN74144N | TI |
| IC24 | Timer | NE555V | Signetics |

Transistors

| | | | |
|---|---|---|---|
| Q1 | PNP | 2N2946A | Raytheon |
| Q2 | PNP | 2N2946A | Raytheon |
| Q3 | PNP | 2N2946A | Raytheon |
| Q4 | PNP | 2N4248 | National |
| Q5 | NPN | 2N3642 | Fair./Nat. |
| Q6 | PNP | 2N4248 | National |
| Q7 | NPN | 2N3642 | Fair./Nat. |
| Q8 | NPN | 2N3642 | Fair./Nat. |
| Q9 | NPN | 2N3642 | Fair./Nat. |
| Q10 | NPN | 2N3642 | Fair./Nat. |
| Q11 | NPN | 2N3642 | Fair./Nat. |

CURRENT ASSEMBLY 42-413-000 Continued

| Symbol | Description | Part No. | Mfg. |
|---|---|---|---|
| Q12 | PNP | 2N4248 | National |
| Q13 | NPN | 2N3642 | Fair./Nat. |

## Resistors

All Values in Ohms
All Res. Carb. Comp. ±5%. Unless noted otherwise.

| | | | |
|---|---|---|---|
| R1 | Metal Film, 21.5K, ±1% | RN60D | |
| R2 | 3.3K, 1/4W | RC07 | |
| R3 | 47, 1/4W | RC07 | |
| R4 | 47, 1/4W | RC07 | |
| R5 | Metal Film, 10K, ±1% | RN60D | |
| R6 | Metal Film, 10K, ±1% | RN60D | |
| R7 | Metal Film, 10K, ±1% | RN60D | |
| R8 | Metal Film, 51.1K, ±1% | RN60D | |
| R9 | Metal Film, 100K, ±1% | RN60D | |
| R10 | Metal Film, 100K, ±1% | RN60D | |
| R11 | Metal Film, 2M, ±1% | RN65D | |
| R12 | Metal Film, 1K, ±1% | RN60D | |
| R13 | Metal Film, 348K, ±1% | RN60D | |
| R14 | 47, 1/4W | RC07 | |
| R15 | 47, 1/4W | RC07 | |
| R16 | Potentiometer, 20K | Helitrim 89PR20K | Beckman |
| R17 | 47, 1/4W | RC07 | |
| R18 | 1K, 1/4W | RC07 | |
| R19 | Potentiometer, 20K | Helitrim 89PR20K | Beckman |
| R20 | Potentiometer, 20K | Helitrim 89PR20K | Beckman |
| R21 | Metal Film, 1K, ±1% | RN60D | |
| R22 | 22K, 1/4W | RC07 | |
| R23 | 27K, 1/4W | RC07 | |

CURRENT ASSEMBLY 42-413-000 Continued

| Symbol | Description | Part No. | Mfg. |
|---|---|---|---|
| R24 | 4.7K, 1/4W | RC07 | |
| R25 | 4.7K, 1/4W | RC07 | |
| R26 | 22K, 1/4W | RC07 | |
| R27 | 10K, 1/4W | RC07 | |
| R28 | 10K, 1/4W | RC07 | |
| R29 | 3.3K, 1/4W | RC07 | |
| R30 | 100K, 1/4W | RC07 | |
| R31 | 220K, 1/4W | RC07 | |
| R32 | 150K, 1/4W | RC07 | |
| R33 | 150K, 1/4W | RC07 | |
| R34 | 470K, 1/4W | RC07 | |
| R35 | 470K, 1/4W | RC07 | |
| R37 | 2.2K, 1/4W | RC07 | |
| R38 | 10, 1/4W | RC07 | |
| R38A | 330, 1/4W | RC07 | |
| R39 | 2.2K, 1/4W | RC07 | |
| R40 | 150, 1/4W | RC07 | |
| R41 | 10, 1/4W | RC07 | |
| R42 | 10, 1/4W | RC07 | |
| R44 | 68K, 1/4W | RC07 | |
| R45 | 470, 1/4W | RC07 | |
| R46 | 150, 1/4W | RC07 | |
| R47 | 1K, 1/4W | RC07 | |
| R48 | 2.2K, 1/4W | RC07 | |
| R49 | 150, 1/4W | RC07 | |
| R61 | 100K, 1/4W | RC07 | |
| R63 | 22K, 1/4W | RC07 | |

CURRENT ASSEMBLY 42-413-000A Continued

| Symbol | Description | Part No. | Mfg. |
|---|---|---|---|
| R64 | 100K, 1/4W | RC07 | |
| R65 | 100, 1/4W | RC07 | |
| R66 | 22K, 1/4W | RC07 | |
| R67 | 27K, 1/4W | RC07 | |
| R68 | 3.3K, 1/4W | RC07 | |
| R69 | 100K, 1/4W | RC07 | |
| R70 | 2.2K, 1/4W | RC07 | |
| R71 | 22K, 1/4W | RC07 | |
| R72 | 27K, 1/4W | RC07 | |
| R73 | Metal Film, 10K, ±1% | RN60D | |
| R74 | Metal Film, 511, ±1% | RN60D | |
| R75 | 1.5K, 1/4W | RC07 | |
| R76 | Metal Film, 2.15K, ±1% | RN60D | |
| R77 | Potentiometer, 1K | Helitrim 89PR1K | Beckman |
| R78 | Metal Film, 3.48K, ±1% | RN60D | |
| R79 | 47, 1/4W | RC07 | |
| R80 | 47, 1/4W | RC07 | |
| R81 | 1K, 1/4W | RC07 | |
| R82 | 470, 1/4W | RC07 | |
| R85 | Metal Film, 1.47K, ±1% | RN60D | |
| R86 | Metal Film, 1.47K, ±1% | RN60D | |
| R87 | 22K, 1/4W | RC07 | |
| R88 | 27K, 1/4W | RC07 | |
| R89 | 22K, 1/4W | RC07 | |
| R90 | 27K, 1/4W | RC07 | |
| R91 | 22K, 1/4W | RC07 | |
| R92 | 22K, 1/4W | RC07 | |
| R93 | 22K, 1/4W | RC07 | |
| R94 | 27K, 1/4W | RC07 | |
| R95 | 2.2K, 1/4W | RC07 | |
| R96 | Potentiometer, 1K | Helitrim 89PR1K | Beckman |
| R97 | 2.2K, 1/4W | RC07 | |

CURRENT ASSEMBLY 42-413-000 Continued

| Symbol | Description | Part No. | Mfg. |
|---|---|---|---|
| R98 | 1K, 1/4W | RC07 | |
| R99 | 2.2K, 1/4W | RC07 | |
| R100 | 470, 1/4W | RC07 | |
| R101 | 470, 1/4W | RC07 | |
| R102 | 22K, 1/4W | RC07 | |
| R103 | 27K, 1/4W | RC07 | |
| R104 | 22K, 1/4W | RC07 | |
| R105 | 27K, 1/4W | RC07 | |
| RI1-2 thru RI1-6 | Pack, 1K, (Sip) | 7531216CH102X5PD | Sprague |
| RI2-2 thru RI2-8 | Pack, 1K, (Sip) | 7531216CH102X5PD | Sprague |
| RI3-4 thru RI3-7 | Pack, 150, (Dip) | 760-3-R150 | CTS |
| RI4-1 thru RI4-7 | Pack, 150, (Dip) | 760-3-R150 | CTS |
| RI5-1 thru RI5-7 | Pack, 150, (Dip) | 760-3-R150 | CTS |
| RI6-1 thru RI6-7 | Pack, 150, (Dip) | 760-3-R150 | CTS |

## Table of Replaceable Parts

PREAMPS 42-417-100

| Symbol | Description | Part No. | Mfg. |
|---|---|---|---|
| | **Integrated Circuits - Linear** | | |
| AI1 | Op. Amp. | AD518J | Analog Devices |
| AI2 | Op. Amp. | AD518J | Analog Devices |
| AV1 | Op. Amp. | AD518J | Analog Devices |
| AV2 | Op. Amp. | AD518J | Analog Devices |
| | **Capacitors** | | |
| CC1 | Cer. Disc, .005uf | 835-000-Z5V0 | Erie |
| CC2 | Cer. Disc, .1uf, 12V | 5655-000-Y5F0-104M | Erie |
| CC3 | Cer. Disc, .1uf, 12V | 5655-000-Y5F0-104M | Erie |
| CC4 | Cer. Disc, .1uf, 12V | 5655-000-Y5F0-104M | Erie |
| CC5 | Cer. Disc, .005uf | 835-000-Z5V0 | Erie |
| CC6 | Cer. Disc, .02uf | 5835-000-Y5U0-203Z | Erie |
| CC7 | Cer. Disc, .02uf | 5835-000-Y5U0-203Z | Erie |
| CC8 | Mylar, .1uf | 192P10492 | Sprague |
| CC9 | Cer. Disc, .02uf | 5835-000-Y5U0-203Z | Erie |
| CC10 | Mylar, .1uf | 192P10492 | Sprague |
| CC11 | Cer. Disc, .02uf | 5835-000-Y5U0-203Z | Erie |
| CC12 | Cer. Disc, .02uf | 5835-000-Y5U0-203Z | Erie |
| CC13 | Solid Tantalum, 4.7uf, 35V | 150D475X 9035B2 | Sprague |
| CC14 | Solid Tantalum, 4.7uf, 35V | 150D475X 9035B2 | Sprague |
| CI2 | Cer., .04uf, 500V | 5HKS40 | Sprague |
| CI3 | Cer. Disc, .05uf, 25V | 5855-000-Y5U0-503Z | Erie |
| CI4 | Cer. Disc, .1uf, 12V | 5655-000-Y5F0-104M | Erie |

PREAMPS 42-417-100 Continued

| Symbol | Description | Part No. | Mfg. |
|---|---|---|---|
| CI5 | Cer. Disc, .05uf, 25V | 5855-000-Y5U0-503Z | Erie |
| CI6 | Cer. Disc, .05uf, 25V | 5855-000-Y5U0-503Z | Erie |
| CI7 | Mica, 2pf, ±1/2pf | CD020D03 | CDE |
| CI8 | Trim Value | | |
| CI9 | Cer. Disc, .05uf, 25V | 5855-000-Y5U0-503Z | Erie |
| CI10 | Cer. Disc, .05uf, 25V | 5855-000-Y5U0-503Z | Erie |
| CI11 | Poly., .001uf | PE102J | Arco |
| CI12 | Cer. Disc, .02uf | 5835-000-Y5U0-203Z | Erie |
| CI13 | Poly., .001uf | PE102J | Arco |
| CI14 | Cer. Disc, .02uf | 5835-000-Y5U0-203Z | Erie |
| CI15 | Cer. Disc, .02uf | 5835-000-Y5U0-203Z | Erie |
| CI16 | Mica, 470pf | DM15-471J | CDE |
| CI18 | Cer. Disc, .05uf, 25V | 5855-000-Y5U0-503Z | Erie |
| CI21 | Cer. Disc, .02uf | 5835-000-Y5U0-203Z | Erie |
| CI22 | Cer. Disc, .02uf | 5835-000-Y5U0-203Z | Erie |
| CI23 | Cer. Disc, .05uf, 25V | 5855-000-Y5U0-503Z | Erie |
| CI24 | Cer. Disc, .05uf, 25V | 5855-000-Y5U0-503Z | Erie |
| CI25 | Cer. Disc, .05uf, 25V | 5855-000-Y5U0-503Z | Erie |
| CI26 | Cer. Disc, .05uf, 25V | 5855-000-Y5U0-503Z | Erie |
| CI27 | Cer., .01uf, 100V | 5835-000-Y5U0-103Z | Erie |
| CI28 | Mica, 2pf | DM15 | CDE |
| CI29 | Mica, 2pf | DM15 | CDE |
| CI30 | Mica, 2pf | DM15 | CDE |
| CI31 | Mica, 2pf | DM15 | CDE |
| CV1 | Trim Value | | |
| CV2 | Cer., .04uf, 500V | 5HKS40 | Sprague |
| CV3 | Cer. Disc, .05uf, 25V | 5855-000-Y5U0-503Z | Erie |
| CV4 | Cer. Disc, .1uf, 12V | 5655-000-Y5F0-104M | Erie |
| CV5 | Cer. Disc, .05uf, 25V | 5855-000-Y5U0-503Z | Erie |
| CV5A | Variable, 5.5-18pf | DV11PR18A | JFD |

PREAMPS 42-417-100 Continued

| Symbol | Description | Part No. | Mfg. |
|---|---|---|---|
| CV6 | Cer. Disc, .05uf, 25V | 5855-000-Y5U0-503Z | Erie |
| CV6A | Variable, 5.5-18pf | DV11PR18A | JFD |
| CV7 | Mica, 2pf | DM15 | CDE |
| CV8 | Trim Value | | |
| CV9 | Cer. Disc, .05uf, 25V | 5855-000-Y5U0-503Z | Erie |
| CV10 | Cer. Disc, .05uf, 25V7 | 5855-000-Y5U0-503Z | Erie |
| CV11 | Poly., .001uf | PE102J | Arco |
| CV12 | Cer. Disc, .02uf | 5835-000-Y5U0-203Z | Erie |
| CV13 | Poly., .001uf | PE102J | Arco |
| CV14 | Cer. Disc, .02uf | 5835-000-Y5U0-203Z | Erie |
| CV15 | Cer. Disc, .02uf | 5835-000-Y5U0-203Z | Erie |
| CV16 | Mica, 470pf | DM15-471J | CDE |
| CV17 | Trim Value | | |
| CV18 | Cer. Disc, .05uf, 25V | 5855-000-Y5U0-503Z | Erie |
| CV21 | Cer. Disc, .02uf | 5835-000-Y5U0-203Z | Erie |
| CV22 | Cer. Disc, .02uf | 5835-000-Y5U0-203Z | Erie |
| CV23 | Cer. Disc, .05uf, 25V | 5855-000-Y5U0-503Z | Erie |
| CV24 | Cer. Disc, .05uf, 25V | 5855-000-Y5U0-503Z | Erie |
| CV25 | Cer. Disc, .05uf, 25V | 5855-000-Y5U0-503Z | Erie |
| CV26 | Cer. Disc, .05uf, 25V | 5855-000-Y5U0-503Z | Erie |
| CV27 | Mylar, .0033uf | 192P33292 | Sprague |
| CV28 | Mica, 2pf | DM15 | CDE |
| CV29 | Mica, 2pf | DM15 | CDE |
| CV30 | Mica, 2pf | DM15 | CDE |
| CV31 | Mica, 2pf | DM15 | CDE |
| CV32 | Cer., .01uf, 100V | 5835-000-Y5U0-103Z | Erie |

Diodes

| | | | |
|---|---|---|---|
| DC1 | Si. Signal | 1N914 | Fairchild |

PREAMPS 42-417-100 Continued

| Symbol | Description | Part No. | Mfg. |
|---|---|---|---|
| DI3 | Si. Signal | 1N914 | Fairchild |
| DI7 | Si. Signal | DE112 | GE |
| DI8 | Zener, 10V | 1N5240B | Fairchild |
| DV1 | Si. Signal | 1N914 | Fairchild |
| DV2 | Si. Signal | 1N914 | Fairchild |
| DV3 | Si. Signal | 1N914 | Fairchild |
| DV7 | Si. Signal | DE112 | GE |
| DV8 | Zener, 10V | 1N5240B | Fairchild |
| DV9 | Si. Signal | 1N914 | Fairchild |
| DV10 | Zener, 10V | 1N5240B | |
| DV11 | Si. Signal | 1N914 | Fairchild |
| DV12 | Zener, 10V | 1N5240B | |
| | **Assemblies** | | |
| KA1I | Input Network | 42-417-300 | KeyTek |
| KA1V | Input Network | 42-417-300 | KeyTek |
| | **Transistors** | | |
| QC1 | NPN | 2N3642 | Fair./Nat. |
| QC2 | NPN | 2N3642 | Fair./Nat. |
| QC3 | NPN | 2N3642 | Fair./Nat. |
| QC4 | NPN | 2N3642 | Fair./Nat. |
| QC5 | PNP | 2N4248 | National |
| QC6 | PNP | 2N4248 | National |

PREAMPS 42-417-100 Continued

| Symbol | Description | Part No. | Mfg. |
|---|---|---|---|
| QI1 | FET | 2N4859 | National |
| QI2 | FET | 2N4859 | National |
| QI3 | FET | 2N4859 | National |
| QI5 | PNP | 2N4248 | National |
| QI6 | PNP | 2N2946A | Raytheon |
| QI7 | FET | 2N4416A | Fair./Nat. |
| QI8 | FET | 2N4416A | Fair./Nat. |
| QI9 | FET | 2N4859 | National |
| QV1 | FET | 2N4859 | National |
| QV2 | FET | 2N4859 | National |
| QV3 | FET | 2N4859 | National |
| QV5 | PNP | 2N4248 | National |
| QV6 | PNP | 2N2946A | Raytheon |
| QV7 | FET | 2N4416A | Fair./Nat. |
| QV8 | FET | 2N4416A | Fair./Nat. |
| QV9 | FET | 2N4859 | National |



## Resistors

All Values in Ohms.
All Res. Carb. Comp. ±5%. Unless noted otherwise.

| | | |
|---|---|---|
| RC1 | 100K, 1/4W | RC07 |
| RC2 | 100K, 1/4W | RC07 |
| RC3 | 100K, 1/4W | RC07 |
| RC4 | 10K, 1/4W | RC07 |
| RC5 | 100K, 1/4W | RC07 |
| RC6 | 10K, 1/4W | RC07 |
| RC7 | 47K, 1/4W | RC07 |

PREAMPS 42-417-100 Continued

| Symbol | Description | Part No. | Mfg. |
|---|---|---|---|
| RC8 | 100K, 1/4W | RC07 | |
| RC9 | 100K, 1/4W | RC07 | |
| RC10 | 100K, 1/4W | RC07 | |
| RC11 | 1K, 1/4W | RC07 | |
| RC12 | 22K, 1/4W | RC07 | |
| RC13 | 100K, 1/4W | RC07 | |
| RC14 | 1K, 1/4W | RC07 | |
| RC15 | 22K, 1/4W | RC07 | |
| RC16 | 10, 1/4W | RC07 | |
| RC17 | 10, 1/4W | RC07 | |
| RI1 | 47,1/4W | RC07 | |
| RI2 | Metal Film, 5.11K, ±1% | RN60D | |
| RI3 | Trim Value | | |
| RI5 | 4.7K, 1/4W | RC07 | |
| RI6 | Trim Value | | |
| RI7 | Metal Film, 5.11K, ±1% | RN60D | |
| RI8 | 47, 1/4W | RC07 | |
| RI9 | 47, 1/4W | RC07 | |
| RI10 | Trim Value | | |
| RI11 | 4.7K, 1/4W | RC07 | |
| RI12 | 4.7K, 1/4W | RC07 | |
| RI14 | 6.8K, 1/4W | RC07 | |
| RI15 | 6.8K, 1/4W | RC07 | |
| RI16 | 10, 1/4W | RC07 | |
| RI18 | 47, 1/4W | RC07 | |
| RI19 | 220, 1/4W | RC07 | |
| RI20 | 220, 1/4W | RC07 | |
| RI21 | 47, 1/4W | RC07 | |
| RI22 | Metal Film, 10K, ±1% | RN60D | |

PREAMPS 42-417-100 Continued

| Symbol | Description | Part No. | Mfg. |
|---|---|---|---|
| RI23 | Metal Film, 5.11K, ±1% | RN60D | |
| RI24 | Metal Film, 5.11K, ±1% | RN60D | |
| RI25 | Metal Film, 1K, ±1% | RN60D | |
| RI26 | 47, 1/4W | RC07 | |
| RI27 | 47, 1/4W | RC07 | |
| RI28 | Metal Film, 5.11K, ±1% | RN60D | |
| RI29 | Metal Film, 348K, ±1% | RN60D | |
| RI30 | Potentiometer, 20K | Helitrim 89PR20K | Beckman |
| RI31 | 47, 1/4W | RC07 | |
| RI32 | 22K, 1/4W | RC07 | |
| RV1 | 47, 1/4W | RC07 | |
| RV2 | Metal Film, 5.11K, ±1% | RN60D | |
| RV3 | Trim Value | | |
| RV4 | 22K, 1/4W | RC07 | |
| RV5 | 4.7K, 1/4W | RC07 | |
| RV6 | Trim Value | | |
| RV7 | Metal Film, 5.11K, ±1% | RN60D | |
| RV8 | 47, 1/4W | RC07 | |
| RV9 | 47, 1/4W | RC07 | |
| RV10 | Trim Value | | |
| RV11 | 4.7K, 1/4W | RC07 | |
| RV12 | 4.7K, 1/4W | RC07 | |
| RV13 | 22K, 1/4W | RC07 | |
| RV14 | 6.8K, 1/4W | RC07 | |
| RV15 | 6.8K, 1/4W | RC07 | |
| RV16 | 10, 1/4W | RC07 | |
| RV18 | 47, 1/4W | RC07 | |
| RV19 | 220, 1/4W | RC07 | |
| RV20 | 220, 1/4W | RC07 | |
| RV21 | 47, 1/4W | RC07 | |
| RV22 | Metal Film, 10K, ±1% | RN60D | |
| RV23 | Metal Film, 5.11K, ±1% | RN60D | |

PREAMPS 42-417-100 Continued

| Symbol | Description | Part No. | Mfg. |
|---|---|---|---|
| RV24 | Metal Film, 5.11K, ±1% | RN60D | |
| RV25 | Metal Film, 1K, ±1% | RN60D | |
| RV26 | 47, 1/4W | RC07 | |
| RV27 | 47, 1/4W | RC07 | |
| RV28 | Metal Film, 5.11K, ±1% | RN60D | |
| RV29 | Metal Film, 348K, ±1% | RN60D | |
| RV30 | Potentiometer, 20K | Helitrim 89PR20K | Beckman |
| RV31 | 47, 1/4W | RC07 | |
| RV32 | 22K, 1/4W | RC07 | |
| RV40 | 4.7K, 1/4W | RC07 | |
| RV41 | 4.7K, 1/4W | RC07 | |
| RV42 | 2.2K, 1/4W | RC07 | |
| RV43 | 2.2K, 1/4W | RC07 | |

## Table of Replaceable Parts

INPUT NETWORK KA1 42-417-300

| Symbol | Description | Part No. | Mfg. |
|---|---|---|---|
| | **Capacitors** | | |
| C1 | Mica, 470pf | DM15-471J | CDE |
| C2 | Cer. Disc, .1uf, 12V | 5655-000-Y5F0-104M | Erie |
| C4 | Cer. Disc, .1uf, 12V | 5655-000-Y5F0-104M | Erie |
| C6 | Cer. Disc, .05uf, 25V | 5855-000-Y5U0-503Z | Erie |
| | **Diodes** | | |
| D1 | Si. Signal | 1N914 | Fairchild |
| D2 | Si. Signal | 1N914 | Fairchild |
| D3 | Si. Signal | 1N914 | Fairchild |
| D4 | Si. Signal | 1N914 | Fairchild |
| D5 | Si. Signal | 1N914 | Fairchild |
| D6 | Si. Signal | 1N914 | Fairchild |
| | **Transistors** | | |
| Q1 | NPN | 2N6006 | GE |
| Q2 | PNP | 2N6005 | GE |
| Q3 | NPN | 2N6006 | GE |
| Q4 | PNP | 2N2946A | Raytheon |
| Q5 | PNP | 2N6005 | GE |
| Q6 | PNP | 2N6005 | GE |
| Q7 | NPN | 2N6006 | GE |

INPUT NETWORK KA1 42-417-300 Continued

| Symbol | Description | Part No. | Mfg. |
|---|---|---|---|
| | Resistors | | |
| | All Values in Ohms. | | |
| | All Res. Carb. Comp. ±5%. Unless noted otherwise. | | |
| R1 | 22K, 1/4W | RC07 | |
| R2 | 10K, 1/4W | RC07 | |
| R3 | 10K, 1/4W | RC07 | |
| R4 | 330, 1/4W | RC07 | |
| R5 | 47, 1/4W | RC07 | |
| R6 | 10, 1/4W | RC07 | |
| R7 | 2.2K, 1/4W | RC07 | |
| R8 | 2.2K, 1/4W | RC07 | |
| R9 | 10, 1/4W | RC07 | |
| R10 | 47, 1/4W | RC07 | |
| R11 | 10K, 1/4W | RC07 | |
| R12 | 330, 1/4W | RC07 | |
| R13 | 10K, 1/4W | RC07 | |

## Table of Replaceable Parts

MEASUREMENT 42-417-200

| Symbol | Description | Part No. | Mfg. |
|---|---|---|---|
| | **Capacitors** | | |
| CI1 | Mylar, .1uf | 192P10492 | Sprague |
| CI2 | Cer., .05uf, 25V | 5855-000-Y5U0-503Z | Erie |
| CV1 | Mylar, .1uf | 192P10492 | Sprague |
| CV2 | Cer., .05uf, 25V | 5855-000-Y5U0-503Z | Erie |
| CV3 | Cer., .05uf, 25V | 5855-000-Y5U0-503Z | Erie |
| | **Diodes** | | |
| DI1 | Si. Signal | 1N914 | Fairchild |
| DI2 | Si. Rect. | 1N4004 | Motorola |
| DI3 | Si. Rect. | 1N4004 | Motorola |
| DV1 | Si. Signal | 1N914 | Fairchild |
| DV2 | Si. Rect. | 1N4004 | Motorola |
| DV3 | Si. Rect. | 1N4004 | Motorola |
| DV4 | Si. Signal | 1N914 | Fairchild |
| DV5 | Si. Signal | 1N914 | Fairchild |
| DV6 | Si. Signal | 1N914 | Fairchild |
| | **Transistors** | | |
| QI1 | NPN | MJE340 | Motoroal |
| QI3 | PNP | 2N4248 | National |
| QI4 | NPN | 2N3642 | Fair./Nat. |

MEASUREMENT 42-417-200 Continued

| Symbol | Description | Part No. | Mfg. |
|---|---|---|---|
| QV1 | NPN | MJE340 | Motorola |
| QV2 | PNP | 2N4248 | National |
| QV3 | NPN | 2N3642 | Fair./Nat. |
| QV4 | NPN | 2N3642 | Fair./Nat. |

## Resistors

All Values in Ohms.
All Res. Carb. Comp. ±5%. Unless noted otherwise.

| | | |
|---|---|---|
| RI1 | 3.3K, 1/4W | RC07 |
| RI2 | 10K, 1/4W | RC07 |
| RI3 | 100, ±10%, 1/2W | RC20 |
| RI6 | 1K, 1/4W | RC07 |
| RI8 | 47K, 1/4W | RC07 |
| RI9 | 47K, 1/4W | RC07 |
| RI10 | 22K, 1/4W | RC07 |
| RV1 | 3.3K, 1/4W | RC07 |
| RV2 | 33K, 1/4W | RC07 |
| RV3, | 10K, 1/4W | RC07 |
| RV5 | 1K, 1/4W | RC07 |
| RV6 | 1K, 1/4W | RC07 |
| RV7 | 47K, 1/4W | RC07 |
| RV8 | 47K, 1/4W | RC07 |
| RV9 | 22K, 1/4W | RC07 |
| RV10 | 22K, 1/4W | RC07 |
| RV11 | 22K, 1/4W | RC07 |

## Table of Replaceable Parts

CURRENT TRANSDUCER AND BOARD 42-435-000

| Symbol | Description | Part No. | Mfg. |
|---|---|---|---|
| | **Capacitors** | | |
| C1 | Cer., .01uf, 100V | 5835-000-Y5U0-103Z | Erie |
| C2 | Cer., .01uf, 100V | 5835-000-Y5U0-103Z | Erie |
| C3 | Cer., .01uf, 100V | 5835-000-Y5U0-103Z | Erie |
| C4* | Cer., .01uf, 100V | 5835-000-Y5U0-103Z | Erie |
| | **Relays** | | |
| K1 | Mercury | W132MPCX-5 | Magn. |
| | **Resistors** | | |
| | All Values in Ohms. | | |
| | All Res. Carb. Comp. ±5%. Unless noted otherwise. | | |
| R1 | Metal Film, 10, ±1% | RN65D | |
| R2 | Metal Film, 51.1, ±1% | RN60D | |
| R4 | Metal Film, 10, ±1% | RN60D | |
| R5 | Metal Film, 10, ±1% | RN60D | |
| R6 | Metal Film, 10, ±1% | RN60D | |
| R7 | Metal Film, 10, ±1% | RN60D | |
| R8 | Metal Film, 10, ±1% | RN60D | |
| R9 | Metal Film, 10, ±1% | RN60D | |
| R10 | Metal Film, 10, ±1% | RN60D | |
| R11 | Metal Film, 10, ±1% | RN60D | |
| R12 | Metal Film, 10, ±1% | RN60D | |
| R13 | Metal Film, 10, ±1% | RN60D | |

CURRENT TRANSDUCER AND BOARD 42-435-000 Continued

| Symbol | Description | Part No. | Mfg. |
|---|---|---|---|
| R15 | Metal Film, 100, ±1% | RN60D | |
| R16 | 100, 1/4W | RC07 | |
| R17 | 100, 1/4W | RC07 | |
| | **Transformers** | | |
| T1 | Current | T421 | KeyTek |

## Table of Replaceable Parts

PROGRAMMER DELAY 42-423-700

| Symbol | Description | Part No. | Mfg. |
|---|---|---|---|
| | **Capacitors** | | |
| C1* | Metal, 33uf, 10V | 150D336X9010B2 | Sprague |
| C2 | Metal, 33uf, 10V | 150D336X9010B2 | Sprague |
| C3 | Metal, 4.7uf, 35V | 150D475X9035B2 | Sprague |
| C4 | Cer., 0.1uf, 12V | 5655-000-Y5F0-104M | Erie |
| C5 | Cer., 0.1uf, 12V | 5655-000-Y5F0-104M | Erie |
| C6 | Cer., 0.1uf, 12V | 5655-000-Y5F0-104M | Erie |
| C7 | Epoxy Tantalum, 2.2uf | 196D225X9025 | Sprague |
| C8 | Cer., 0.1uf, 12V | 5655-000-Y5F0-104M | Erie |
| | **Diodes** | | |
| D1 | Si. Signal | 1N914 | Fairchild |
| D2 | Si. Signal | 1N914 | Fairchild |
| D3 | Si. Signal | 1N914 | Fairchild |
| D4 | Silicon Avalanche Device | 1.5KE6.8 | Gen'l Semi |
| D5 | Zener, 5.1V | 1N5231B | Motorola |
| D6 | Si. Signal | 1N914 | Fairchild |
| | **Transistors** | | |
| Q1 | PNP | 2N4248 | National |
| Q2 | PNP | 2N4248 | National |
| Q3 | NPN | 2N3642 | Fair./Nat. |
| Q4 | NPN | 2N3642 | Fair./Nat. |
| Q5 | PNP | 2N4248 | National |
| Q6 | PNP | 2N4248 | National |
| Q7 | NPN | 2N3642 | Fair./Nat. |

*For Programmers requiring 50-second delay.

PROGRAMMER DELAY 42-423-700 Continued

| Symbol | Description | Part No. | Mfg. |
|---|---|---|---|
| | Resistors | | |
| | All Values in Ohms. | | |
| | All Res. Carb. Comp. ±5%. Unless noted otherwise. | | |
| R1 | 10K, 1/4W | RC07 | |
| R2 | Metal Film, 1M, ±1% | RN60D | |
| R3 | Metal Film, 1M, ±1% | RN60D | |
| R4 | 100, 1/4W | RC07 | |
| R5 | Potentiometer, 1M | 89PR1MEG | Helipot |
| R6 | 1M, 1/4W | RC07 | |
| R7 | 100K, 1/4W | RC07 | |
| R8 | 2.2K, 1/4W | RC07 | |
| R9 | 100, 1/4W | RC07 | |
| R10 | 22K, 1/4W | RC07 | |
| R11 | 1K, 1/4W | RC07 | |
| R12 | 2.2K, 1/4W | RC07 | |
| R13 | 22K, 1/4W | RC07 | |
| R14 | 22K, 1/4W | RC07 | |
| R15 | 100, 1/4W | RC07 | |
| R16 | 22K, 1/4W | RC07 | |
| R17 | 2.2K, 1/4W | RC07 | |
| R18 | 4.7K, 1/4W | RC07 | |
| R19 | 10, 1/4W | RC07 | |
| R20 | 330, 1/4W | RC07 | |
| R21 | 4.7K, 1/4W | RC07 | |
| R22 | Metal Film, 100K, ±1% | RN60D | |
| R23 | 27K, 1/2W | RC20 | |
| R24 | 27K, 1/2W | RC20 | |
| R25 | 27K, 1/2W | RC20 | |
| R26 | 27K, 1/2W | RC20 | |
| R27 | 27K, 1/2W | RC20 | |
| R28 | 27K, 1/2W | RC20 | |

This page left blank intentionally.

## Table of Replaceable Parts

PROGRAMMER NETWORK PN241 42-425-111

| Symbol | Description | Part No. | Mfg. |
|---|---|---|---|
| | **Capacitors** | | |
| C1 | Cer., .002mfd, 6KV | DD60-202 | Centralab |
| C2 | Cer., .002mfd, 6KV | DD60-202 | Centralab |
| C3 | Cer., .001mfd, 6KV | DD60-102 | Centralab |
| | **Indicators** | | |
| I1 | Medium Green, Incandescent | 44-DD07-NG0 | Data Display |
| | **Inductors** | | |
| L1/L2 | 90uH | 42-423-144-21 | KeyTek |
| | **Resistors** | | |
| | All Values in Ohms. | | |
| | All Res. Carb. Comp. ±5%. Unless noted otherwise. | | |
| R1 | Power, 1K, 50W, N.I. | Type 4B | RES Inc. |
| R3 | Power, 13, ±2%, 50W, N.I. | Type 4B | RES Inc. |
| R4 | Power, 13, ±2%, 50W, N.I. | Type 4B | RES Inc. |
| R5 | Power, 102, ±2%, 50W, N.I. | Type 4B | RES Inc. |
| R6 | Power, 102, ±2%, 50W, N.I. | Type 4B | RES Inc. |
| R7 | 22, 2W | RC42 | |

PROGRAMMER NETWORK PN241 42-425-111 Continued

| Symbol | Description | Part No. | Mfg. |
|---|---|---|---|
| R102 | Trim On Test | RN60D | |
| R103 | Trim On Test | RN60D | |
| R104 | Trim On Test | RN60D | |
| | Switches | | |
| S1/S2 | Push-button | 42-423-150-02 | KeyTek |
| S6 | Lever (Grey/Red Button) | P26-228-103 | Chicago Switch |

# Table of Replaceable Parts

PROGRAMMER NETWORKS PN242, PN244 42-431-121

| Symbol | Description | Part No. | Mfg. |
|---|---|---|---|
| | **Capacitors** | | |
| C1 | Cer., .002mfd, 6KV | DD60-202 | Centralab |
| | **Indicators** | | |
| I1 | Medium Green, Incandescent | 44-DD07-NG0 | Data Display |
| | **Inductors** | | |
| L1 | 2.6uH | 42-423-144-01 | KeyTek |
| | **Resistors** | | |
| | All Values in Ohms. | | |
| | All Res. Carb. Comp. ±5%. Unless noted otherwise. | | |
| R1 | Power, 0.5, ±10% | 42-423-110-11 | KeyTek |
| R2 | Power, 55, 50W, N.I. | Type 4B | RES Inc. |
| R3 | Power, 21, 50W, N.I. | Type 4B | RES Inc. |
| R4 | Power, 10, 50W, N.I. | Type 4B | RES Inc. |
| R5 | Power, 4.8, 50W, N.I. | Type 4B | RES Inc. |
| R6 | Power, 0.9, 50W, N.I. | Type 4B | RES Inc. |
| R7 | Power, 0.9, 50W, N.I. | Type 4B | RES Inc. |
| R8 | 27, 2W | RC42 | |

PROGRAMMER NETWORKS PN242, PN244 42-431-121 Continued

| Symbol | Description | Part No. | Mfg. |
|---|---|---|---|
| R101 | Trim On Test | RN60D | |
| R102 | Trim On Test | RN60D | |
| R103 | Trim On Test | RN60D | |
| R104 | Trim On Test | RN60D | |
| | **Switches** | | |
| S1 thru S5 | Push-button | 42-423-150-05 | KeyTek |
| S6 | Lever (Grey/Red Button) | P26-228-103 | Chicago Switch |

## Table of Replaceable Parts

PROGRAMMER NETWORK PN243 42-431-103

| Symbol | Description | Part No. | Mfg. |
|---|---|---|---|
| | **Capacitors** | | |
| C1 | Cer., .001uf, 6KV | DD60-102 | Centralab |
| C2 | Cer., .001uf, 6KV | DD60-102 | Centralab |
| | **Indicators** | | |
| I1 | Medium Green, Incandescent | 44-DD07-NG0 | Data Display |
| | **Inductors** | | |
| L1 | 24uH | 42-423-143-14 | KeyTek |
| L2 | 10uH | 42-423-143-15 | KeyTek |
| L3 | 5uH | 42-423-143-04 | KeyTek |
| L4 | 2.5uH | 42-423-143-03 | KeyTek |
| | **Resistors** | | |
| | All Values in Ohms.<br>All Res. Carb. Comp. ±5%. Unless noted otherwise. | | |
| R1 | Power, 1, ±10% | 42-423-110-12 | KeyTek |
| R2 | Power, 80, 50W, ±2%, N.I. | Type 4B | RES Inc. |
| R3 | Power, 32, 50W, ±2%, N.I. | Type 4B | RES Inc. |
| R4 | Power, 16, 50W, ±2%, N.I. | Type 4B | RES Inc. |
| R5 | Power, 8, 50W, ±2%, N.I. | Type 4B | RES Inc. |
| R6 | Power, 3.3, 50W, ±2%, N.I. | Type 4B | RES Inc. |
| R7 | 27, 2W | RC42 | |

PROGRAMMER NETWORK PN243 42-431-103 Continued

| Symbol | Description | Part No. | Mfg. |
|---|---|---|---|
| R101 | Trim On Test | RN60D | |
| R102 | Trim On Test | RN60D | |
| R103 | Trim On Test | RN60D | |
| R104 | Trim On Test | RN60D | |
| | **Switches** | | |
| S1 thru S5 | Push-button | 42-423-150-02 | KeyTek |
| S6 | Lever | P26-228-103 | Chicago Switch |

## Table of Replaceable Parts

PROGRAMMER NETWORK PN246 42-431-161

| Symbol | Description | Part No. | Mfg. |
|---|---|---|---|
| | **Capacitors** | | |
| C3 | Mylar, .015mfd, 1600V | 715P | Sprague |
| C4 | Mylar, .002mfd, 6KV | DD60-202 | Centralab |
| C5 | Mylar, .002mfd, 6KV | DD60-202 | Centralab |
| C6 | Mylar, .015mfd, 1600V | 715P | Sprague |
| | **Indicators** | | |
| I1 | Medium Green, Incandescent | 44-DD07-NG0 | Data Display |
| | **Inductors** | | |
| L1 | 40uH | 42-423-143-10 | KeyTek |
| L2 | 200uH | 42-423-144-22/ 42-423-143-12 | KeyTek |
| L3 | 110uH | 42-423-144-20/ 42-423-143-10 | KeyTek |
| L4 | 50uH | 42-423-143-11 | KeyTek |
| L5 | 7uH | 42-423-143-01 | KeyTek |
| | **Resistors** | | |
| | All Values in Ohms. All Res. Carb. Comp. ±5%. Unless noted otherwise. | | |
| R1 | Power, 55, 50W, N.I. | Type 4B | RES Inc. |
| R2 | Power, 7, 25W, N.I. | Type 2B | RES Inc. |

VOLTAGE ASSEMBLY (OPTION P ONLY) 42-415-000 Continued

| Symbol | Description | Part No. | Mfg. |
|---|---|---|---|
| | **Resistors** | | |
| | All Values in Ohms.<br>All Res. Carb. Comp. ±5%. Unless noted otherwise. | | |
| R100 | 100K, 1/4W | RC07 | |
| R101 | 10K, 1/4W | RC07 | |
| R102 | 1K, 1/4W | RC07 | |
| R103 | 100K, 1/4W | RC07 | |
| R104 | 10K, 1/4W | RC07 | |
| R105 | 1K, 1/4W | RC07 | |
| R106 | 10K, 1/4W | RC07 | |
| R107 | 2.2K, 1/4W | RC07 | |
| R108 | 10K, 1/4W | RC07 | |
| R109 | 1K, 1/4W | RC07 | |

## Table of Replaceable Parts

PROGRAM/READOUT ASSEMBLY 42-415-100

| Symbol | Description | Part No. | Mfg. |
|---|---|---|---|
| | **Capacitors** | | |
| C1 | Cer., .05uf, 25V | 5855-000-Y5U0-505Z | Erie |
| C2 | Solid Tantalum, 33uf, 10V | 150D336X9010B2 | Sprague |
| C3 | Cer., .05uf, 25V | 5855-000-Y5U0-505Z | Erie |
| C4 | Cer., .05uf, 25V | 5855-000-Y5U0-505Z | Erie |
| C5 | Cer., .05uf, 25V | 5855-000-Y5U0-505Z | Erie |
| C6 | Cer., 0.1uf, 12V | 5655-000-Y5F0-104M | Erie |
| C7 | Cer., .05uf, 25V | 5855-000-Y5U0-505Z | Erie |
| C8 | Epoxy Tantalum, 6.8uf, 25V | 196D685X90 25JA1 | Sprague |
| C9 | Cer., .05uf, 25V | 5855-000-Y5U0-505Z | Erie |
| C10 | Cer., .05uf, 25V | 5855-000-Y5U0-505Z | Erie |
| C11 | Cer., .05uf, 25V | 5855-000-Y5U0-505Z | Erie |
| C12 | Cer., 0.1uf, 12V | 5655-000-Y5F0-104M | Erie |
| C13 | Epoxy Tantalum, 39uf, 10V | 196D396X9010 KA1 | Sprague |
| C14 | Cer., .01uf, 100V | 5835-000-Y5U0-103Z | Erie |
| C15 | Cer., .01uf, 100V | 5835-000-Y5U0-103Z | Erie |
| C16 | Cer., 0.1uf, 12V | 5655-000-Y5F0-104M | Erie |
| C17 | Cer., .01uf, 100V | 5835-000-Y5U0-103Z | Erie |
| C18 | Cer., .01uf, 100V | 5835-000-Y5U0-103Z | Erie |
| C19 | Cer., .01uf, 100V | 5835-000-Y5U0-103Z | Erie |
| C20 | Cer., .01uf, 100V | 5835-000-Y5U0-103Z | Erie |
| C21 | Cer., .01uf, 100V | 5835-000-Y5U0-103Z | Erie |
| C22 | Cer., .01uf, 100V | 5835-000-Y5U0-103Z | Erie |
| C23 | Cer., .01uf, 100V | 5835-000-Y5U0-103Z | Erie |
| C24 | Cer., .01uf, 100V | 5835-000-Y5U0-103Z | Erie |
| C25 | Cer., .05uf, 25V | 5855-000-Y5U0-505Z | Erie |
| C26 | Cer., .05uf, 25V | 5855-000-Y5U0-505Z | Erie |
| C27 | Solid Tantalum, 33uf, 10V | 150D336X9010B2 | Sprague |
| C28 | Cer., .05uf, 25V | 5855-000-Y5U0-505Z | Erie |

PROGRAM/READOUT ASSEMBLY 42-415-100 Continued

| Symbol | Description | Part No. | Mfg. |
|---|---|---|---|
| C29 | Cer., .05uf, 25V | 5855-000-Y5U0-505Z | Erie |
| C30 | Cer., 0.1uf, 12V | 5655-000-Y5F0-104M | Erie |
| C31 | Cer., .01uf, 100V | 5835-000-Y5U0-103Z | Erie |
| C32 | Cer., .05uf, 25V | 5855-000-Y5U0-505Z | Erie |
| C33 | Epoxy Tantalum, 2.2uf, 25V | 196D225X9025MA1 | Sprague |
| C34 | Cer., .05uf, 25V | 5855-000-Y5U0-505Z | Erie |
| C35 | Cer., .05uf, 25V | 5855-000-Y5U0-505Z | Erie |
| C36 | Cer., .01uf, 100V | 5835-000-Y5U0-103Z | Erie |
| C37 | Cer., .01uf, 100V | 5835-000-Y5U0-103Z | Erie |
| C38 | Cer., .05uf, 25V | 5855-000-Y5U0-505Z | Erie |
| C39 | Epoxy Tantalum, 6.8uf, 25V | 196D685X90 25JA1 | Sprague |
| C40 | Cer., .05uf, 25V | 5855-000-Y5U0-505Z | Erie |
| C41 | Cer., .05uf, 25V | 5855-000-Y5U0-505Z | Erie |
| C42 | Cer., .01uf, 100V | 5835-000-Y5U0-103Z | Erie |
| C43 | Cer., .01uf, 100V | 5835-000-Y5U0-103Z | Erie |
| C44 | Cer., 0.1uf, 12V | 5655-000-Y5F0-104M | Erie |
| C45 | Cer., .01uf, 100V | 5835-000-Y5U0-103Z | Erie |
| C46 | Cer., .05uf, 25V | 5855-000-Y5U0-505Z | Erie |
| C47 | Epoxy Tantalum, .39uf, 35V | 196D394X9035HA1 | Sprague |
| C48 | Epoxy Tantalum, .39uf, 35V | 196D394X9035HA1 | Sprague |
| C49 | Cer., .01uf, 100V | 5835-000-Y5U0-103Z | Erie |
| C50 | Cer., .01uf, 100V | 5835-000-Y5U0-103Z | Erie |
| C51 | Cer., 0.1uf, 12V | 5655-000-Y5F0-104M | Erie |
| C52 | Cer., 0.1uf, 12V | 5655-000-Y5F0-104M | Erie |
| C53 | Cer., .01uf, 100V | 5835-000-Y5U0-103Z | Erie |
| C54 | Cer., .05uf, 25V | 5855-000-Y5U0-505Z | Erie |
| C55 | Cer., .05uf, 25V | 5855-000-Y5U0-505Z | Erie |
| C56 | Cer., .05uf, 25V | 5855-000-Y5U0-505Z | Erie |
| C57 | Cer., .05uf, 25V | 5855-000-Y5U0-505Z | Erie |
| C58 | Cer., .05uf, 25V | 5855-000-Y5U0-505Z | Erie |
| C59 | Cer., .05uf, 25V | 5855-000-Y5U0-505Z | Erie |
| C60 | Cer., .05uf, 25V | 5855-000-Y5U0-505Z | Erie |

PROGRAM/READOUT ASSEMBLY 42-415-100 Continued

| Symbol | Description | Part No. | Mfg. |
|---|---|---|---|
| C61 | Cer., .05uf, 25V | 5855-000-Y5U0-505Z | Erie |
| C62 | Cer., .05uf, 25V | 5855-000-Y5U0-505Z | Erie |
| C63 | Cer., .05uf, 25V | 5855-000-Y5U0-505Z | Erie |
| C64 | Cer., .05uf, 25V | 5855-000-Y5U0-505Z | Erie |
| C65 | Cer., .05uf, 25V | 5855-000-Y5U0-505Z | Erie |
| C66 | Cer., .05uf, 25V | 5855-000-Y5U0-505Z | Erie |
| C67 | Cer., .05uf, 25V | 5855-000-Y5U0-505Z | Erie |
| C68 | Cer., .05uf, 25V | 5855-000-Y5U0-505Z | Erie |
| C69 | Cer., .05uf, 25V | 5855-000-Y5U0-505Z | Erie |
| C70 | Cer., .05uf, 25V | 5855-000-Y5U0-505Z | Erie |
| C71 | Cer., .05uf, 25V | 5855-000-Y5U0-505Z | Erie |
| C72 | Cer., .05uf, 25V | 5855-000-Y5U0-505Z | Erie |
| C73 | Cer., .05uf, 25V | 5855-000-Y5U0-505Z | Erie |
| C74 | Cer., .05uf, 25V | 5855-000-Y5U0-505Z | Erie |
| C75 | Cer., .05uf, 25V | 5855-000-Y5U0-505Z | Erie |
| C76 | Cer., .05uf, 25V | 5855-000-Y5U0-505Z | Erie |
| C77 | Cer., .05uf, 25V | 5855-000-Y5U0-505Z | Erie |
| C78 | Cer., .05uf, 25V | 5855-000-Y5U0-505Z | Erie |
| C79 | Solid Tantalum, 33uf, 10V | 150D336X9010B2 | Sprague |
| | **Diodes** | | |
| D1 | Si. Signal | 1N914 | Fairchild |
| D100 | Silicon Avalanche Device | 1.5KE6.8 | Gen'l Semi |
| D101 | Silicon Avalanche Device | 1.5KE6.8 | Gen'l Semi |
| | **Integrated Circuits - Digital** | | |
| ICA3 | Quad. Gate | SN74L00N | TI |
| ICA4 | Quad. Gate | SN74L00N | TI |

PROGRAM/READOUT ASSEMBLY 42-415-100 Continued

| Symbol | Description | Part No. | Mfg. |
|---|---|---|---|
| ICA5 | Quad. Gate | SN74L00N | TI |
| ICA7 | Quad. Gate | SN74L00N | TI |
| ICA8 | Quad. Gate | SN74L00N | TI |
| ICA9 | Quad. Gate, Open Collector | SN74LS38 | TI |
| ICA10 | Quad. Gate | SN74L00N | TI |
| ICA11 | Quad. Gate | SN74L00N | TI |
| ICA12 | Quad. Gate, Open Collector | SN74LS38 | TI |
| ICA13 | Quad. Gate | SN74L00N | TI |
| ICA14 | Quad. Gate | SN74L00N | TI |
| ICA15 | Quad. Gate | SN74L00N | TI |
| ICB3 | Quad. Gate | SN74L00N | TI |
| ICB5 | Quad. Gate | SN74L00N | TI |
| ICB6 | Quad. Gate | SN74L00N | TI |
| ICB7 | Quad. Gate | SN74L00N | TI |
| ICB8 | Quad. Gate | SN74L00N | TI |
| ICB10 | Quad. Gate | SN74L00N | TI |
| ICB11 | Quad. Gate | SN74L00N | TI |
| ICB12 | Quad. Gate | SN74L00N | TI |
| ICB15 | Timer | LM555CN | National |
| ICC13 | Timer | LM555CN | National |
| ICC14 | Timer | LM555CN | National |
| ICC15 | Timer | LM555CN | National |
| ICC16 | Timer | LM555CN | National |

PROGRAM/READOUT ASSEMBLY 42-415-100 Continued

| Symbol | Description | Part No. | Mfg. |
|---|---|---|---|
| | **Transistors** | | |
| Q3 | NPN | 2N3642 | Fair./Nat. |
| Q4 | NPN | MJE340 | Motorola |
| Q5 | NPN | 2N3642 | Fair./Nat. |
| Q6 | NPN | MJE340 | Motorola |
| Q7 | NPN | MJE340 | Motorola |
| | **Resistors** | | |
| | All Values in Ohms. | | |
| | All Res. Carb. Comp. ±5%. Unless noted otherwise. | | |
| R2 | 22K, 1/4W | RC07 | |
| R3 | 10K, 1/4W | RC07 | |
| R4 | 22K, 1/4W | RC07 | |
| R5 | 27K, 1/4W | RC07 | |
| R6 | Metal Film, 215K, ±1% | RN60D | |
| R7 | 22K, 1/4W | RC07 | |
| R8 | 27K, 1/4W | RC07 | |
| R9 | 10K, 1/4W | RC07 | |
| R10 | 10K, 1/4W | RC07 | |
| R11 | 22K, 1/4W | RC07 | |
| R12 | 27K, 1/4W | RC07 | |
| R13 | 100K, 1/4W | RC07 | |
| R14 | 100, 1/4W | RC07 | |
| R15 | 22K, 1/4W | RC07 | |
| R16 | 27K, 1/4W | RC07 | |
| R17 | 10K, 1/4W | RC07 | |
| R18 | 22K, 1/4W | RC07 | |
| R19 | 27K, 1/4W | RC07 | |

PROGRAM/READOUT ASSEMBLY 42-415-100 Continued

| Symbol | Description | Part No. | Mfg. |
|---|---|---|---|
| R20 | 22K, 1/4W | RC07 | |
| R21 | 27K, 1/4W | RC07 | |
| R22 | Metal Film, 147K, ±1% | RN60D | |
| R24 | 4.7K, 1/4W | RC07 | |
| R25 | 22K, 1/4W | RC07 | |
| R26 | 27K, 1/4W | RC07 | |
| R27 | 68K, 1/4W | RC07 | |
| R29 | 10K, 1/4W | RC07 | |
| R30 | 6.8K, 2W | RC42 | |
| R31 | 6.8K, 2W | RC42 | |
| R33 | 22K, 1/4W | RC07 | |
| R34 | 22K, 1/4W | RC07 | |
| R35 | 4.7K, 1/4W | RC07 | |
| R35A | 10K, 1/4W | RC07 | |
| R36 | 330, 1/4W | RC07 | |
| R36A | 470, 1/4W | RC07 | |
| R37 | 4.7K, 1/4W | RC07 | |
| R37A | 10K, 1/4W | RC07 | |
| R38 | 330, 1/4W | RC07 | |
| R38A | 470, 1/4W | RC07 | |
| R39 | 22K, 1/4W | RC07 | |
| R40 | 27K, 1/4W | RC07 | |
| R41 | 10K, 1/4W | RC07 | |
| R42 | 10K, 1/4W | RC07 | |
| R43 | 22K, 1/4W | RC07 | |
| R44 | 27K, 1/4W | RC07 | |
| R45 | 100, 1/4W | RC07 | |

Table of Replaceable Parts

CONNECTOR BOARD 42-423-500

| Symbol | Description | Part No. | Mfg. |
|---|---|---|---|
| | Capacitors | | |
| C1 | Cer., 0.1uf, 12V | 5655-000-Y5F0-104M | Erie |
| C2 | Cer., 0.1uf, 12V | 5655-000-Y5F0-104M | Erie |
| C3 | Cer., 0.1uf, 12V | 5655-000-Y5F0-104M | Erie |
| C4 | Cer., 0.1uf, 12V | 5655-000-Y5F0-104M | Erie |
| C5 | Cer., 0.1uf, 12V | 5655-000-Y5F0-104M | Erie |
| C6 | Cer., 0.1uf, 12V | 5655-000-Y5F0-104M | Erie |
| C7 | Cer., 0.1uf, 12V | 5655-000-Y5F0-104M | Erie |
| C8 | Cer., 0.1uf, 12V | 5655-000-Y5F0-104M | Erie |
| C9 | Cer., 0.1uf, 12V | 5655-000-Y5F0-104M | Erie |
| C10 | Cer., 0.1uf, 12V | 5655-000-Y5F0-104M | Erie |
| C11 | Cer., 0.1uf, 12V | 5655-000-Y5F0-104M | Erie |
| C12 | Cer., 0.1uf, 12V | 5655-000-Y5F0-104M | Erie |
| C13 | Cer., 0.1uf, 12V | 5655-000-Y5F0-104M | Erie |
| C14 | Cer., 0.1uf, 12V | 5655-000-Y5F0-104M | Erie |
| C15 | Cer., 0.1uf, 12V | 5655-000-Y5F0-104M | Erie |
| C16 | Cer., 0.1uf, 12V | 5655-000-Y5F0-104M | Erie |
| C17 | Cer., 0.1uf, 12V | 5655-000-Y5F0-104M | Erie |
| C18 | Cer., 0.1uf, 12V | 5655-000-Y5F0-104M | Erie |
| C19 | Cer., 0.1uf, 12V | 5655-000-Y5F0-104M | Erie |
| C20 | Cer., 0.1uf, 12V | 5655-000-Y5F0-104M | Erie |
| C21 | Cer., 0.1uf, 12V | 5655-000-Y5F0-104M | Erie |
| C22 | Cer., 0.1uf, 12V | 5655-000-Y5F0-104M | Erie |
| C23 | Cer., 0.1uf, 12V | 5655-000-Y5F0-104M | Erie |
| C24 | Cer., 0.1uf, 12V | 5655-000-Y5F0-104M | Erie |
| C25 | Cer., 0.1uf, 12V | 5655-000-Y5F0-104M | Erie |
| C25 | Cer., 0.1uf, 12V | 5655-000-Y5F0-104M | Erie |
| C26 | Cer., 0.1uf, 12V | 5655-000-Y5F0-104M | Erie |
| C27 | Cer., 0.1uf, 12V | 5655-000-Y5F0-104M | Erie |
| C28 | Cer., 0.1uf, 12V | 5655-000-Y5Fo-104M | Erie |
| C29 | Cer., 0.1uf, 12V | 5655-000-Y5F0-104M | Erie |

CONNECTOR BOARD 42-423-500 Continued

| Symbol | Description | Part No. | Mfg. |
|---|---|---|---|
| | Resistors | | |
| | All Values in Ohms. | | |
| | All Res. Carb. Comp. ±5%. Unless noted otherwise. | | |
| R1 | 220, 1/4W | RC07 | |
| R2 | 220, 1/4W | RC07 | |
| R3 | 47, 1/4W | RC07 | |
| R4 | 47, 1/4W | RC07 | |
| R5 | 47, 1/4W | RC07 | |
| R6 | 47, 1/4W | RC07 | |
| R7 | 47, 1/4W | RC07 | |
| R8 | 47, 1/4W | RC07 | |
| R9 | 47, 1/4W | RC07 | |
| R10 | 220, 1/4W | RC07 | |
| R11 | 220, 1/4W | RC07 | |
| R12 | 220, 1/4W | RC07 | |
| R13 | 220, 1/4W | RC07 | |
| R14 | 47, 1/4W | RC07 | |
| R15 | 220, 1/4W | RC07 | |
| R16 | 47, 1/4W | RC07 | |
| R17 | 47, 1/4W | RC07 | |
| R18 | 47, 1/4W | RC07 | |
| R19 | 47, 1/4W | RC07 | |
| R20 | 47, 1/4W | RC07 | |
| R21 | 47, 1/4W | RC07 | |
| R22 | 47, 1/4W | RC07 | |
| R23 | 220, 1/4W | RC07 | |
| R24 | 47, 1/4W | RC07 | |
| R25 | 47, 1/4W | RC07 | |
| R26 | 47, 1/4W | RC07 | |
| R27 | 47, 1/4W | RC07 | |
| R28 | 47, 1/4W | RC07 | |
| R29 | 220, 1/4W | RC07 | |

## Table of Replaceable Parts

CURRENT ASSEMBLY 42-413-000

| Symbol | Description | Part No. | Mfg. |
|---|---|---|---|
| | **Integrated Circuits - Linear** | | |
| A1 | Op. Ampl. | AD301AH | Analog Devices |
| A2 | Comparator | LM311H | National |
| A3 | Op. Ampl. | AD301AH | Analog Devices |
| | **Capacitors** | | |
| C1 | Mylar, 1uf, 100V | TRWX663F | TRW |
| C2 | Mica, 100pf | DM15-101J | CDE |
| C3 | Cer., .05uf, 25V | 5855-000-Y5U0-503Z | Erie |
| C4 | Cer., .05uf, 25V | 5855-000-Y5U0-503Z | Erie |
| C5 | Mica, 47pf | DM15-470J | CDE |
| C6 | Cer., .05uf, 25V | 5855-000-Y5U0-503Z | Erie |
| C7 | Cer., .05uf, 25V | 5855-000-Y5U0-503Z | Erie |
| C8 | Cer., .05uf, 25V | 5855-000-Y5U0-503Z | Erie |
| C9 | Mylar, .047uf, 200V | 192P47392 | Sprague |
| C10 | Cer., 0.1uf, 12V | 5655-000-Y5F0-104M | Erie |
| C11 | Cer., .01uf, 100V | 5835-000-Y5U0-103Z | Erie |
| C12 | Cer., .01uf, 100V | 5835-000-Y5U0-103Z | Erie |
| C13 | Cer., .01uf, 100V | 5835-000-Y5U0-103Z | Erie |
| C14 | Solid Tantalum, 4.7uf, 35V | 150D-475X9035B2 | Sprague |
| C15 | Cer., .05uf, 25V | 5855-000-Y5U0-503Z | Erie |
| C16 | Solid Tantalum, 4.7uf, 35V | 150D-475X9035B2 | Sprague |
| C17 | Cer., .05uf, 25V | 5855-000-Y5U0-503Z | Erie |
| C18 | Solid Tantalum, 4.7uf, 35V | 150D-475X9035B2 | Sprague |
| C19 | Cer., .05uf, 25V | 5855-000-Y5U0-503Z | Erie |
| C20 | Cer., 0.1uf, 12V | 5655-000-Y5F0-104M | Erie |
| C21 | Cer., .05uf, 25V | 5855-000-Y5U0-503Z | Erie |
| C22 | Cer., .05uf, 25V | 5855-000-Y5U0-503Z | Erie |
| C23 | Cer., .05uf, 25V | 5855-000-Y5U0-503Z | Erie |

CURRENT ASSEMBLY 42-413-000 Continued

| Symbol | Description | Part No. | Mfg. |
|---|---|---|---|
| C24 | Cer., .05uf, 25V | 5855-000-Y5U0-503Z | Erie |
| C25 | Cer., .05uf, 25V | 5855-000-Y5U0-503Z | Erie |
| C26 | Cer., .05uf, 25V | 5855-000-Y5U0-503Z | Erie |
| C27 | Mylar, .001uf, 200V | 192P10292 | Sprague |
| C28 | Epoxy Tantalum, 120, 6V | 196D127X9006LA3 | Sprague |
| C29 | Epoxy Tantalum, 120, 6V | 196D127X9006LA3 | Sprague |
| C30 | Cer., 0.1uf, 12V | 5655-000-Y5F0-104M | Erie |
| C31 | Cer., .02uf, 25V | 5835-000-Y5U0-203Z | Erie |
| C32 | Cer., 0.1uf, 12V | 5655-000-Y5F0-104M | Erie |
| C33 | Epoxy Tantalum, 39uf, 10V | 196D-396X9010KA1 | Sprague |
| C34 | Cer., 0.1uf, 12V | 5655-000-Y5F0-104M | Erie |
| C35 | Cer., 0.1uf, 12V | 5655-000-Y5F0-104M | Erie |
| C36 | Cer., 0.1uf, 12V | 5655-000-Y5F0-104M | Erie |
| C37 | Cer., 0.1uf, 12V | 5655-000-Y5F0-104M | Erie |
| C38 | Cer., .01uf, 100V | TA110 | Mallory |
| C39 | Cer., .01uf, 100V | TA110 | Mallory |
| C40 | Epoxy Tantalum, .39uf, 35V | 196D394X9035HA1 | Sprague |
| C41 | Cer., .01uf, 100V | TA110 | Mallory |
| C42 | Cer., .01uf, 100V | TA110 | Mallory |
| C43 | Cer., .01uf, 100V | TA110 | Mallory |
| C44 | Mica, 220pf | CD15FD221J03 | CDE |
| C45 | Cer., .05uf, 25V | 5855-000-Y5U0-503Z | Erie |
| C46 | Cer., .05uf, 25V | 5855-000-Y5U0-503Z | Erie |
| C53 | Mica, 2200pf | DM19-222J | |
| C54 | Cer., .05uf, 25V | 5855-000-Y5U0-503Z | Erie |
| C55 | Solid Tantalum, 33uf, 10V | 150D-336X9010B2 | Sprague |
| C56 | Cer., .02uf, 25V | 5835-000-Y5U0-503Z | Erie |
| C57 | Cer., 0.1uf, 12V | 5655-000-Y5F0-104M | Erie |
| C58 | Cer., 0.1uf, 12V | 5655-000-Y5F0-104M | Erie |
| C59 | Cer., .02uf, 25V | 5835-000-Y5U0-203Z | Erie |
| C60 | Cer., .01uf, 100V | TA110 | Mallory |
| C61 | Cer., .01uf, 100V | TA110 | Mallory |

PROGRAMMER NETWORK PN246 42-431-161 Continued

| Symbol | Description | Part No. | Mfg. |
|---|---|---|---|
| R3 | Power, 100, 25W, N.I. | Type 2B | RES Inc. |
| R4 | 4.7K, 2W | RC42 | |
| R5 | 2.2K, 2W | RC42 | |
| R6 | Power, 22, 25W, N.I. | Type 2B | RES Inc. |
| R7 | Power, 15, 25W, N.I. | Type 2B | RES Inc. |
| R8 | 27, 2W | RC42 | |
| R9 | 120, 2W | RC42 | |
| | **Switches** | | |
| S1 thru S5 | Push-button | 42-423-150-05 | KeyTek |
| S6 | Lever | P26-228-103 | Chicago Switch |

## Table of Replaceable Parts

PROGRAMMER NETWORK PN247 42-430-117

| Symbol | Description | Part No. | Mfg. |
|---|---|---|---|
| | **Indicators** | | |
| I1 | Medium Green, Incandescent | 44-DD07-NG0 | Data Display |
| | **Inductors** | | |
| L1 | 2uH | 42-423-144-02 | KeyTek |
| | **Resistors** | | |
| | All Values in Ohms. | | |
| | All Res. Carb. Comp. ±5%. Unless noted otherwise. | | |
| R1 | Power, 1, ±10% | 42-423-110-12 | KeyTek |
| R2 | Power, 1, ±10% | 42-423-110-12 | KeyTek |
| R3 | Power, 0.5, ±10% | 42-423-110-11 | KeyTek |
| R4 | Power, 0.5, ±10% | 42-423-110-11 | KeyTek |
| R5 | Metal Film, 1K, ±1% | RN60D | |
| R6 | Metal Film, 51.1, ±1% | RN60D | |
| R101 | Trim On Test | RN60D | |
| R102 | Trim On Test | RN60D | |
| R103 | Trim On Test | RN60D | |
| R104 | Trim On Test | RN60D | |
| | **Switches** | | |
| S6 | Lever | P26-228-103 | Chicago Switch |

This page left blank intentionally.

## Table of Replaceable Parts

PROGRAMMER NETWORK PN248 42-425-113

| Symbol | Description | Part No. | Mfg. |
|---|---|---|---|
| | **Capacitors** | | |
| C1 | Cer., .002mfd, 6KV | DD60-202 | Centralab |
| | **Indicators** | | |
| I1 | Medium Green, Incandescent | 44-DD07-NG0 | Data Display |
| | **Inductors** | | |
| L1 | 7uH | 42-423-144-11 | KeyTek |
| L2 | 18uH | 42-423-143-13 | KeyTek |
| | **Resistors** | | |
| | All Values in Ohms. | | |
| | All Res. Carb. Comp. ±5%. Unless noted otherwise. | | |
| R1 | Power, 16, ±2%, 50W, N.I. | Type 4B | RES Inc. |
| R2 | Power, 16, ±2%, 50W, N.I. | Type 4B | RES Inc. |
| R3 | Power, 16, ±2%, 50W, N.I. | Type 4B | RES Inc. |
| R4 | Power, 16, ±2%, 50W, N.I. | Type 4B | RES Inc. |
| R5 | Power, 10, ±2%, 50W, N.I. | Type 4B | RES Inc. |
| R6 | Power, 10, ±2%, 50W, N.I. | Type 4B | RES Inc. |
| R7 | Power, 8, ±2%, 50W, N.I. | Type 4B | RES Inc. |
| R8 | Power, 8, ±2%, 50W, N.I. | Type 4B | RES Inc. |
| R9 | Power, 100, ±2%, 50W, N.I. | Type 4B | RES Inc. |
| R10 | 27, 2W | RC42 | |

PROGRAMMER NETWORK PN248 42-425-113 Continued

| Symbol | Description | Part No. | Mfg. |
|---|---|---|---|
| R101 | Trim On Test | RN60D | |
| R102 | Trim On Test | RN60D | |
| R103 | Trim On Test | RN60D | |
| R104 | Trim On Test | RN60D | |
| | Switches | | |
| S1/S2 | Push-button | 42-423-150-02 | KeyTek |
| S6 | Lever | P26-228-103 | Chicago Switch |

## Table of Replaceable Parts

PROGRAMMER NETWORK PN249 42-425-115

| Symbol | Description | Part No. | Mfg. |
|---|---|---|---|
| | **Capacitors** | | |
| C1 | Mylar, 2uf, 1KV | 663UW | TRW |
| C2 | Mylar, 0.47uf, 1KV | 663UW | TRW |
| | **Indicators** | | |
| I1 | Medium Green, Incandescent | 44-DD07-NG0 | Data Display |
| | **Resistors** | | |
| | All Values in Ohms. | | |
| | All Res. Carb. Comp. ±5%. Unless noted otherwise. | | |
| R1 | Power, 0.5, ±10% | 42-423-110-11 | KeyTek |
| R2 | Power, 0.5, ±10% | 42-423-110-11 | KeyTek |
| R3 | Power, 33, 50W, ±2%, N.I. | Type 4B | RES Inc. |
| R4 | Power, 0.5, ±10% | 42-423-110-01 | KeyTek |
| R5 | Power, 0.5, ±10% | 42-423-110-01 | KeyTek |
| R6 | Power, 1, ±10% | 42-423-110-12 | KeyTek |
| R7 | 2.7, 2W, ±5% | RC42 | Stackpole |
| R8 | 2.7, 2W, ±5% | RC42 | Stackpole |
| R9 | 2.7, 2W, ±5% | RC42 | Stackpole |
| R10 | 2.7, 2W, ±5% | RC42 | Stackpole |
| R11 | 2.7, 2W, ±5% | RC42 | Stackpole |
| R101 | Trim On Test | RN60D | |
| R102 | Trim On Test | RN60D | |

## Table of Replaceable Parts

PROGRAMMER NETWORK PN282 28-210-100

| Symbol | Description | Part No. | Mfg. |
|---|---|---|---|
| | **Capacitors** | | |
| C1 | Cer., .002uf, 6KV | DD60-202 | Centralab |
| C2 | Energy Storage, 10uf, 2KV | 30P1 | Sprague |
| C3 | Mylar, 0.47uf, 1000V | 663UW | TRW |
| C4 | Mylar, 10.0uf, 220V AC | 439P | Sprague |
| C5 | Mylar, 10.0uf, 220V AC | 439P | Sprague |
| C6 | Mylar, 10.0uf, 220V AC | 439P | Sprague |
| C7 | Trim On Test | | |
| C9 | Mylar, 6.0uf, 220V AC | 439P | Sprague |
| C10 | Cer., .002uf, 6KV | DD60-20 | Centralab |
| C11 | Cer., .002uf, 6KV | DD60-20 | Centralab |
| | **Diodes** | | |
| D1 | Zener, 3V, 5W | 1N5333 | Motorola |
| | **Protectors** | | |
| E1 | Gas Tube | B1A-350 | Siemens |
| | **Indicators** | | |
| I1 | Medium Green, Incandescent | 44-DD07-NG0 | Data Display |
| I2 | Led, Red Medium | 44-R2-NR0-BX | Data Display |

PROGRAMMER NETWORK PN282 28-210-100 Continued

| Symbol | Description | Part No. | Mfg. |
|---|---|---|---|
| | **Inductors** | | |
| L2 | 40uH | 42-423-143-10 | KeyTek |
| L3 | 135uH | 42-423-112-01 | KeyTek |
| L4 | 135uH | 42-423-112-01 | KeyTek |
| | **Resistors** | | |
| | All Values in Ohms. | | |
| | All Res. Carb. Comp. ±5%. Unless noted otherwise. | | |
| R1 | Power, 2, ±10% | 42-423-110-13 | KeyTek |
| R2 | 47, 2W | RC42 | |
| R3 | Power, 5, 50W, ±2%, N.I. | Type 4B | RES Inc. |
| R4 | 22, 2W | RC42 | |
| R5 | 470K, 2W | RC42 | |
| R6 | 470K, 2W | RC42 | |
| R7 | Metal Film, 960, ±1% | 42-423-108-01 | KeyTek |
| R8 | Trim On Test | | |
| R9 | Power, 20, 25W, ±2%, N.I. | Type 2B | RES Inc. |
| R10 | Trim On Test | | |
| R11 | 47K, 2W | RC42 | |
| R12 | 47K, 2W | RC42 | |
| R13 | 47, 1/4W | RC07 | |
| R101 | Trim On Test | | |
| R102 | Trim On Test | | |
| R103 | Trim On Test | | |
| R104 | Trim On Test | | |

PROGRAMMER NETWORK PN249 42-425-115 Continued

| Symbol | Description | Part No. | Mfg. |
|---|---|---|---|
| R103 | Trim On Test | RN60D | |
| R104 | Trim On Test | RN60D | |
| | Switches | | |
| S1/S2 | Push-button | 42-423-150-2 | KeyTek |
| S6 | Lever | P26-228-103 | Chicago Switch |

## Table of Replaceable Parts

PROGRAMMER NETWORK PN250 42-425-117

| Symbol | Description | Part No. | Mfg. |
|---|---|---|---|
| | **Capacitors** | | |
| C1 | High Voltage, 0.033uf, 1600V DC | 715P333516MD3 | Sprague |
| | **Indicators** | | |
| I1 | Medium Green, Incandescent | 44-DD07-NG0 | Data Display |
| | **Inductors** | | |
| L1 | 5uH | 42-423-144-13 | KeyTek |
| L2 | 44uH | 42-423-144-12 | KeyTek |
| | **Resistors** | | |
| | All Values in Ohms.<br>All Res. Carb. Comp. ±5%. Unless noted otherwise. | | |
| R1 | Power, 25, 100W, N.I. | | RES Inc. |
| R2 | Power, 25, 100W, N.I. | | RES Inc. |
| R3 | Power, 2, 100W, ±2%, N.I. | | RES Inc. |
| R4 | Power, 12.5, 50W, ±2%, N.I. | Type 4B | RES Inc. |
| R5 | Power, 2, 100W, ±2%, N.I. | | RES Inc. |
| R6 | Power, 2, 100W, ±2%, N.I. | | RES Inc. |
| R7 | Power, 3.3, 50W, ±2%, N.I. | Type 4B | RES Inc. |
| R8 | Power, 5, 50W, ±2%, N.I. | Type 4B | RES Inc. |

PROGRAMMER NETWORK PN250 42-425-117 Continued

| Symbol | Description | Part No. | Mfg. |
|---|---|---|---|
| R102 | Trim On Test | RN60D | |
| R103 | Trim On Test | RN60D | |
| R104 | Trim On Test | RN60D | |
| | Switches | | |
| S1/S2 | Push-button | 42-423-150-02 | KeyTek |
| S6 | Lever | P26-228-103 | Chicago Switch |

## Table of Replaceable Parts

PROGRAMMER NETWORK PN251 42-430-115

| Symbol | Description | Part No. | Mfg. |
|---|---|---|---|
| | **Capacitors** | | |
| C1 | High Voltage, 0.033uf, 1600V DC | 715P333516MD3 | Sprague |
| C4 | High Voltage, 0.033uf, 1600V DC | 715P333516MD3 | Sprague |
| | **Indicators** | | |
| I1 | Medium Green, Incandescent | 44-DD07-NG0 | Data Display |
| | **Inductors** | | |
| L1 | 25uH | 42-423-144-14 | KeyTek |
| | **Resistors** | | |
| | All Values in Ohms. | | |
| | All Res. Carb. Comp. ±5%. Unless noted otherwise. | | |
| R1 | Power, 4.5, 100W, N.I. | | RES Inc. |
| R2 | Power, 4.5, 100W, N.I. | | RES Inc. |
| R3 | Power, 4.5, 100W, N.I. | | RES Inc. |
| R4 | Power, 4.5, 100W, N.I. | | RES Inc. |
| R5 | Power, 0.72, 100W, ±2%, N.I. | | RES Inc. |
| R6 | Power, 0.72, 100W, ±2%, N.I. | | RES Inc. |
| R7 | Power, 5, 50W, ±2%, N.I. | Type 4B | RES Inc. |
| R8 | Power, 0.72, 100W, ±2%, N.I. | | RES Inc. |
| R9 | Power, 0.72, 100W, ±2%, N.I. | | RES Inc. |

PROGRAMMER NETWORK PN251 42-430-115 Continued

| Symbol | Description | Part No. | Mfg. |
|---|---|---|---|
| | Switches | | |
| S6 | Lever | P26-228-103 | Chicago Switch |

PROGRAMMER NETWORK PN261 42-430-111 Continued

| Symbol | Description | Part No. | Mfg. |
|---|---|---|---|
| | **Resistors** | | |
| | All Values in Ohms. | | |
| | All Res. Carb. Comp. ±5%. Unless noted otherwise. | | |
| R1 | Power, 200, 25W, N.I. | Type 2B | RES Inc. |
| R2 | Power, 200, 25W, N.I. | Type 2B | RES Inc. |
| R3 | 68, 2W | RC42 | |
| R4 | 120, 2W | RC42 | |
| R5 | 470K, 1W | RC32 | |
| R6 | Metal Film, 960, ±1% | 42-423-108-01 | KeyTek |
| R7 | 120, 2W | RC42 | |
| R8 | 47K, 2W | RC42 | |
| R9 | 47K, 2W | RC42 | |
| R10 | 68, 1W | RC32 | |
| R101 | Trim On Test | | |
| R102 | Trim On Test | | |
| R103 | Trim On Test | | |
| R104 | Trim On Test | | |
| | **Switches** | | |
| S6 | Lever | P26-228-103 | Chicago Switch |
| | **Transformers** | | |
| T1 | Step Up | 42-423-330 | KeyTek |
| T2 | Current, Unity | 42-423-340 | KeyTek |
| T3 | Current, Voltage Sense | 42-423-350 | KeyTek |

## Table of Replaceable Parts

PROGRAMMER NETWORK PN261 42-430-111

| Symbol | Description | Part No. | Mfg. |
|---|---|---|---|
| | **Capacitors** | | |
| C1 | Mylar, 1uf, 1KV | 663UW | TRW |
| C2 | Mylar, 1uf, 1KV | 663UW | TRW |
| C3 | Cer., .002uf, 6KV | DD60-202 | Centralab |
| C4 | Cer., .002uf, 6KV | DD60-202 | Centralab |
| C5 | Cer., .002uf, 6KV | DD60-202 | Centralab |
| C6 | Cer., .002uf, 6KV | DD60-202 | Centralab |
| C7 | Cer., .002uf, 6KV | DD60-202 | Centralab |
| C8 | Cer., .002uf, 6KV | DD60-202 | Centralab |
| C9 | Cer., .002uf, 6KV | DD60-202 | Centralab |
| C10 | Cer., .002uf, 6KV | DD60-202 | Centralab |
| C11 | Mylar, 0.47uf, 1KV | 663UW | TRW |
| C12 | Mylar, 0.47uf, 1KV | 663UW | TRW |
| C13 | Cer., 50pf, 6KV | DD60-500 | Centralab |
| | **Protectors** | | |
| E1 | Gas Tube | BIC 145 | Siemans |
| | **Indicators** | | |
| I1 | Medium Green, Incandescent | 44-DD07-NG0 | Data Display |

PROGRAMMER NETWORK PN282 28-210-100 Continued

| Symbol | Description | Part No. | Mfg. |
|---|---|---|---|
| | **Switches** | | |
| S2 | Circuit Breaker | 7633-203-111 | Airpax |
| S6 | Lever | P26-228-103 | Chicago Switch |
| | **Transformers** | | |
| T1 | Step Up | 42-423-360 | KeyTek |
| T2 | Current, Unity | 42-423-342 | KeyTek |
| T3 | Current, Voltage Sense | 42-423-350 | KeyTek |

This page left blank intentionally.

# 8. Schematics and Location Drawings

## 8.1 Symbols and Notations

### 8.1.1 Units and Component Assumptions

Unless otherwise indicated:

1. resistors are in ohms, inductors in microhenries
2. capacitors < 1 are in mfd
3. capacitors ≥ 1 are in pf, except polarized units (marked with a + on one terminal) are in ufd
4. diodes are 1N914
5. quad gates are two-input Nand gates, 74L00; with +5 connected to pin 14, and logic ground connected to pin 7.

### 8.1.2 Trims and Test Points

1. * Signifies trim on test; except even though omitted for power resistors, all power resistors in the Programmer Networks are in this category.
2. On Control and High Voltage, Voltage and Current Assemblies, main test points are numbered sequentially from left to right along the top of the board as viewed from the front of the instrument. Each additional test point, below, is numbered from left to right as A, B, according to the main test point immediately to its left. Thus 3A, 3B are used for the two lower test points directly to the right of main (upper) test point 3.

### 8.1.3 Terminals and Connections

outgoing connection to another board, bottom pins

from another point on the same board, possibly on another sheet of the same schematic

to another point on the same board, again possibly to another sheet of the same schematic

see specific schematic; but if not otherwise specified, refers to connections at the top of a PC board, connected via multi-wire preformed cable to another board

see specific schematic

see specific schematic

analog signal ground

analog power ground

digital circuit ground, or logic ground

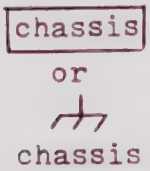


chassis ground

8.1.4 Drawings Supplied

In the case of Programmer Networks and/or auxiliary equipment such as Energy Storage Units Models 210 and 211, as well as other ancillary instrumentation, schematics and location drawings are supplied only for those items furnished as part of an installation. Thus even though drawings may be mentioned in the text and/or an index, they may not be included in the section that follows.

## SCHEMATICS AND LOCATION DRAWINGS


| | | Page |
|---|---|---|
| Location, Main Assembly & Front Panel | 42-400-000 | 8-7 |
| Schematic, Main Assembly | 42-400-001C | 8-8 |
| Schematic, Main Assembly Including System 4 Mods-PHA | 42-454-101A | 8-8A |
| Schematic Main Assembly, 424T | 42-400-001 | 8-8B |
| Connector Locations | 42-400-005 | 8-9 |
| Coax. Connection System | 42-400-007 | 8-10 |
| Voltage Transducer and Range Switching | 42-400-011 | 8-11 |
| Current Transducer and Range Switching | 42-400-013 | 8-12 |
| Circuit Interlock System | 42-400-009 | 8-13 |
| Model 424 Circuit Interlock System Including System 4 Mods-PHA | 42-454-103A | 8-14 |
| Schematic, Front Panel | 42-400-010 | 8-24 |
| Schematic, Front Panel Board (J21,J22,J23,J24) | 42-423-201B | 8-25 |
| Component Location, Front Panel Board | 42-423-200 | 8-26 |
| Schematic, Regulators (J7,J8) | 42-421-001 | 8-27 |

## SCHEMATICS AND LOCATION DRAWINGS (CONTINUED)


| | | | Page |
|---|---|---|---|
| Component Location, Regulators (J7,J8) | 42-421-000 | | 8-28 |
| Schematic, Control & High Voltage Assembly (J1) | 42-411-001 | | 8-29 |
| Component Location, Control & High Voltage | 42-411-000 | | 8-30 |
| Schematic, Voltage Assembly (J2A,J2B,J2C) | 42-415-001 | sheet 1 | 8-31 |
| | | sheet 2 | 8-32 |
| (Option P Only) | | sheet 3 | 8-33 |
| Component Location, Voltage Assembly | 42-415-000A | | 8-34 |
| Component Location, Voltage Assembly | 42-415-000C | | 8-35 |
| Schematic, Voltage Assembly (J2A,J2B,J2C,J2D) | 42-415-101E | sheet 1 | 8-36 |
| | | sheet 2 | 8-36A |
| | | sheet 3 | 8-36B |
| | | sheet 4 | 8-37C |
| | | sheet 5 | 8-37D |
| | | sheet 6 | 8-37E |
| Component Location, Program/REadout Assembly | 42-415-100 | | 8-38 |
| Schematic/Location, Connector Board | 42-423-500C | | 8-39 |
| Schematic, Current Assembly (J3A,J3B) | 42-413-001 | sheet 1 | 8-40 |
| | | sheet 2 | 8-41 |
| | | sheet 3 | 8-42 |
| Schematic, Current Assembly (J3A,J2B) | 42-413-001D | sheet 1 | 8-42A |
| | | sheet 2 | 8-42B |
| | | sheet 3 | 8-42C |
| | | sheet 4 | 8-42D |
| | | sheet 5 | 8-42E |
| | | sheet 6 | 8-42F |

## SCHEMATICS AND LOCATION DRAWINGS (continued)


| | | | Page |
|---|---|---|---|
| Component Location, Current Assembly | 42-413-000 | | 8-43 |
| Schematic, Preamps Sheet 1 of 2 for Input Assembly (J4) | 42-417-001 | sheet 1 | 8-44 |
| Schematic Measurement Assembly Sheet 2 of 2 for Input Assembly (J4) | | sheet 2 | 8-45 |
| Component Location, Input Assembly (J4) | 42-417-000 | | 8-46 |

SCHEMATICS AND LOCATION DRAWINGS (continued)
(The following are furnished only when the equipments they depict are supplied.)


| | | Page |
|---|---|---|
| Schematic & Location, Delay Remote Board | 42-423-600 | 8-56 |
| Schematic/Location, Programmer Delay Board | 42-423-700 | 8-67 |
| Schematic/Location, Programmer PN 241 (J5,J6) | 42-425-111 | 8-68 |
| Schematic/Location, Programmers PN 242, PN 244 (J5,J6) | 42-431-121 | 8-69 |
| Schematic/Location, Programmer PN 243 (J5,J6) | 42-431-131 | 8-70 |
| Schematic/Location, Programmer PN 246 (J5,J6) | 42-430-161 | 8-71 |
| Schematic/Location, Programmer PN 247 (J5,J6) | 42-430-117 | 8-72 |
| Schematic/Location, Programmer PN 247A (J5,J6) | 42-430-120 | 8-72A |
| Schematic/Location, Programmer PN 248 (J5,J6) | 42-425-113 | 8-73 |
| Schematic/Location, Programmer PN 249 (J5,J6) | 42-425-115 | 8-74 |
| Schematic/Location, Programmer PN 250 (J5,J6) | 42-425-117 | 8-75 |
| Schematic/Location, Programmer PN 250D (J5,J6) | 42-429-112-00 | 8-75A |
| Schematic/Location, Programmer PN 251 (J5,J6) | 42-430-115 | 8-76 |
| Schematic/Location, Programmer PN 252 (J5,J6) | 42-425-100 | 8-77 |
| Schematic/Location, Programmer PN 252A (J5,J6) | 42-429-124 | 8-77A |

SCHEMATICS AND LOCATION DRAWINGS (continued)
(The following are furnished only when the equipments they depict are supplied.)


| | | Page |
|---|---|---|
| Schematic/Location, Programmer PN 253 (J5,J6) | 42-431-171 | 8-78 |
| Schematic/Location, Programmer PN 254 (J5,J6) | 42-429-111 | 8-79 |
| Schematic/Location, Programmer PN 255 (J5,J6) | 42-431-141 | 8-80 |
| Schematic/Location, Programmer PN 261 (J5,J6) | 42-430-111 | 8-87 |
| Schematic, Programmer PN 281 (J5,J6) | 28-110-001A | 8-106 |
| Location, Programmer PN 281 (J5,J6) | 28-110-000 | 8-107 |
| Schematic, Programmer PN 281 LSC | 28-110-104 | 8-107A |
| Schematic, Programmer PN 281 LSC | 28-110-104 | 8-107B |
| Schematic, Programmer PN 282 (J5,J6) | 28-210-001 | 8-108 |
| Location, Programmer PN 282 (J5,J6) | 28-210-000 | 8-109 |
| Schematic, Line Synch | 28-010-101A | 8-109A |
| Schematic, Programmer PN 283 (J5,J6) (and Termination T283-1) | 28-310-001 | 8-110 |
| Location, Programmer PN 283 (J5,J6) | 28-310-000 | 8-111 |
| Schematic, Programmer PN 284 | 28-310-119B | 8-112 |

SCHEMATICS AND LOCATION DRAWINGS (continued)
(The following are furnished only when the equipments they depict are supplied.)


| | | Page |
|---|---|---|
| Schematic, Programmer PN 286 (J5,J6) | 29-210-108 | 8-116 |
| Schematic, Programmer PN 291 (J5,J6) | 29-110-001 | 8-121 |
| Location, Programmer PN 291 (J5,J6) | 29-110-000 | 8-122 |
| Schematic/Location Programmer PN 292 (J5,J6) | 42-429-171 | 8-123 |
| Schematic/Location Programmer PN 293 (J5,J6) | 42-429-181 | 8-124 |
| Schematic/Location Programmer PN 294 (J5,J6) | 42-429-191 | 8-125 |
| Schematic/Location Programmer PN 295 (J5,J6) | 42-429-201 | 8-126 |
| Energy Storage Units 210 & 211 | 21-011-001 | 8-130 |
| Ground System | 42-400-003 | 8-131 |
| Schematic/Location Test Fixture Model 450 | 45-011-000 | 8-150 |

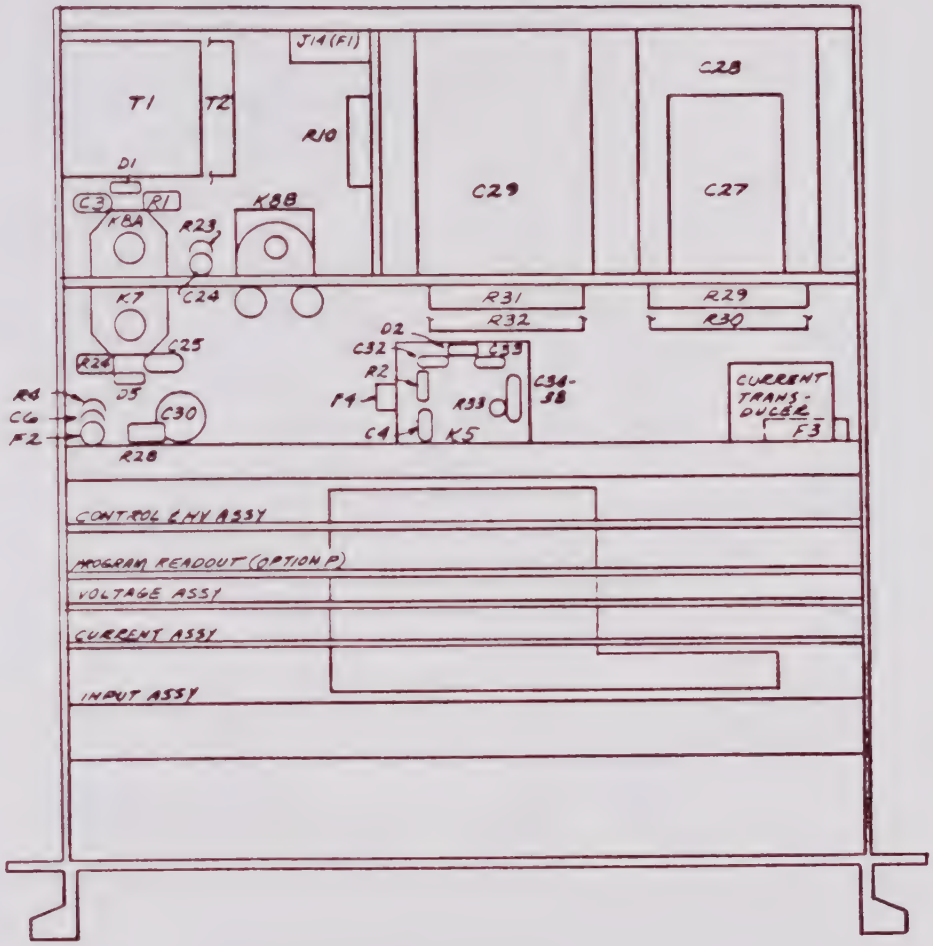


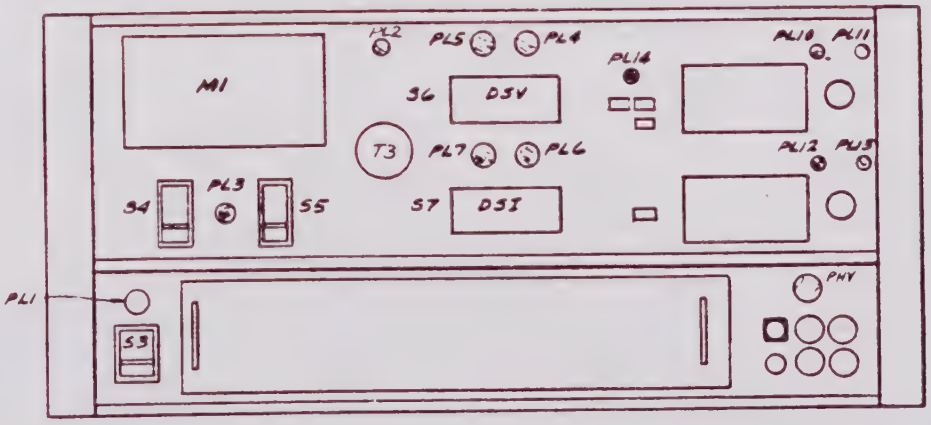


| | | |
|---|---|---|
| SCALE | APPROVED BY RSW ✓ | DRAWN BY BH |
| DATE 2/3/77 | | |

LOCATION, MAIN ASSEMBLY & FRONT PANEL

KeyTek INSTRUMENT CORP — DRAWING NUMBER 42-400-000A

original

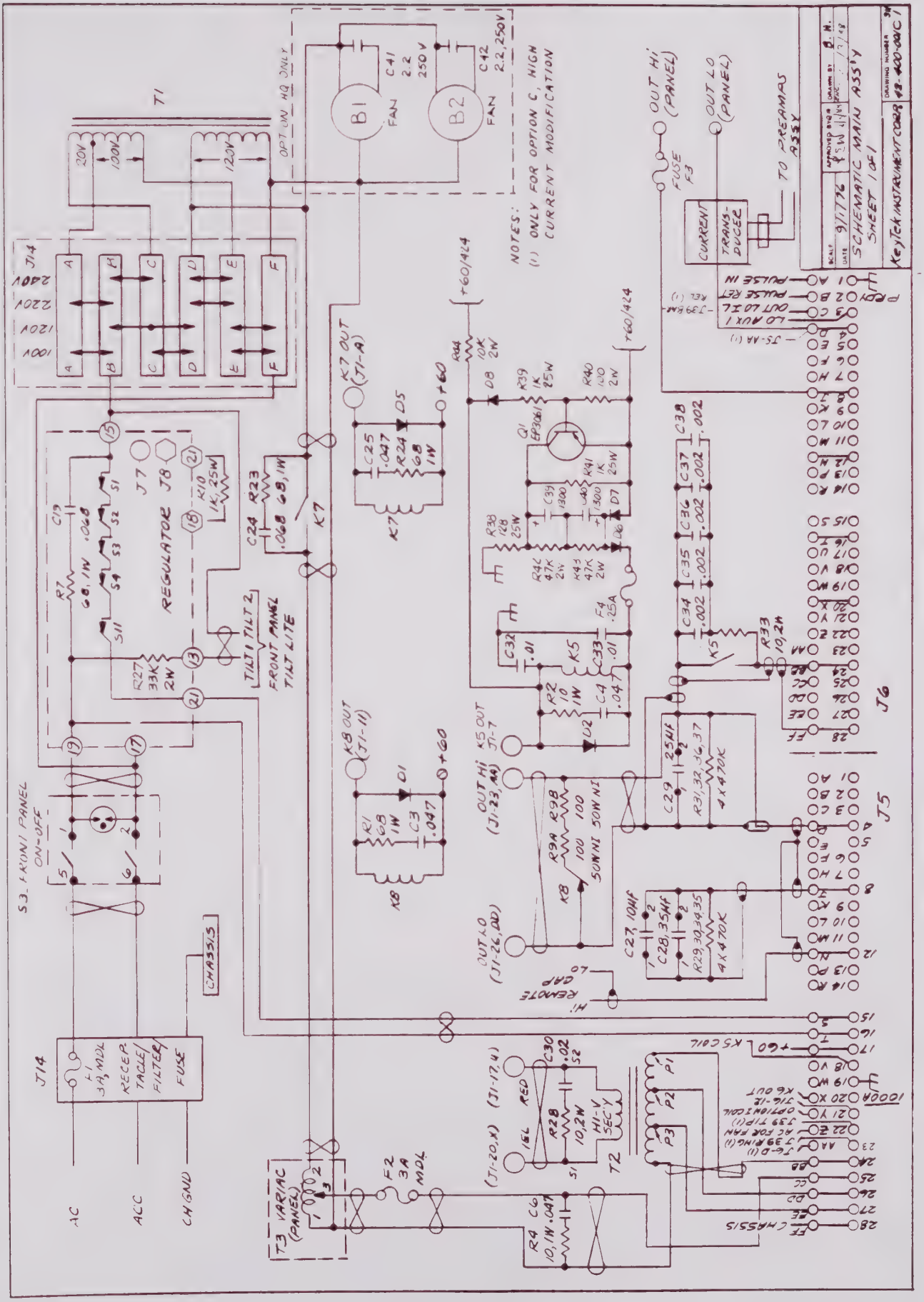

SCHEMATIC MAIN ASS'Y
SHEET 1 OF 1
KeyTek INSTRUMENT CORP.
DRAWING NUMBER 42-400-001C1
DATE 9/1/76
SCALE
APPROVED BY
DRAWN BY B. H.
NOTES:
(1) ONLY FOR OPTION C, HIGH CURRENT MODIFICATION
OPTION HQ ONLY
T1
20V
100V
120V
J14
100V
120V
220V
240V
B1
FAN
C41 2.2 250V
B2
FAN
C42 2.2, 250V
OUT HI (PANEL)
OUT LO (PANEL)
FUSE F3
CURRENT TRANS-DUCER
TO PREAMPS ASSY
PULSE IN
PULSE RET
OUT LO IL
LO AUX 1
J5-AA (1)
J39 BM-REL (1)
PRDY
K7 OUT (J1-A)
K8 OUT (J1-11)
K5 OUT J1-7
OUT HI (J1-23, AA)
OUT LO (J1-26, DD)
REMOTE CAP
HI
LO
K5 COIL
K6 OUT
J39 TIP (1)
J39 RING (1)
AC FOR FAN
J6-D (1)
J6-12
OPTION I COIL
J16-12
1000A
CHASSIS
REGULATOR
J7
J8
TILT 1 TILT 2
FRONT PANEL TILT LITE
S3 FRONT PANEL ON-OFF
CHASSIS
J14
3A, MDL
RECEP-TACLE/FILTER/FUSE
AC
ACC
CH GND
T3 VARIAC (PANEL)
F2 3A MDL
(J1-20, X)
(J1-17, U)
IEL
RED
HI-V SEC'Y
T2
P1
P2
P3
J5
J6

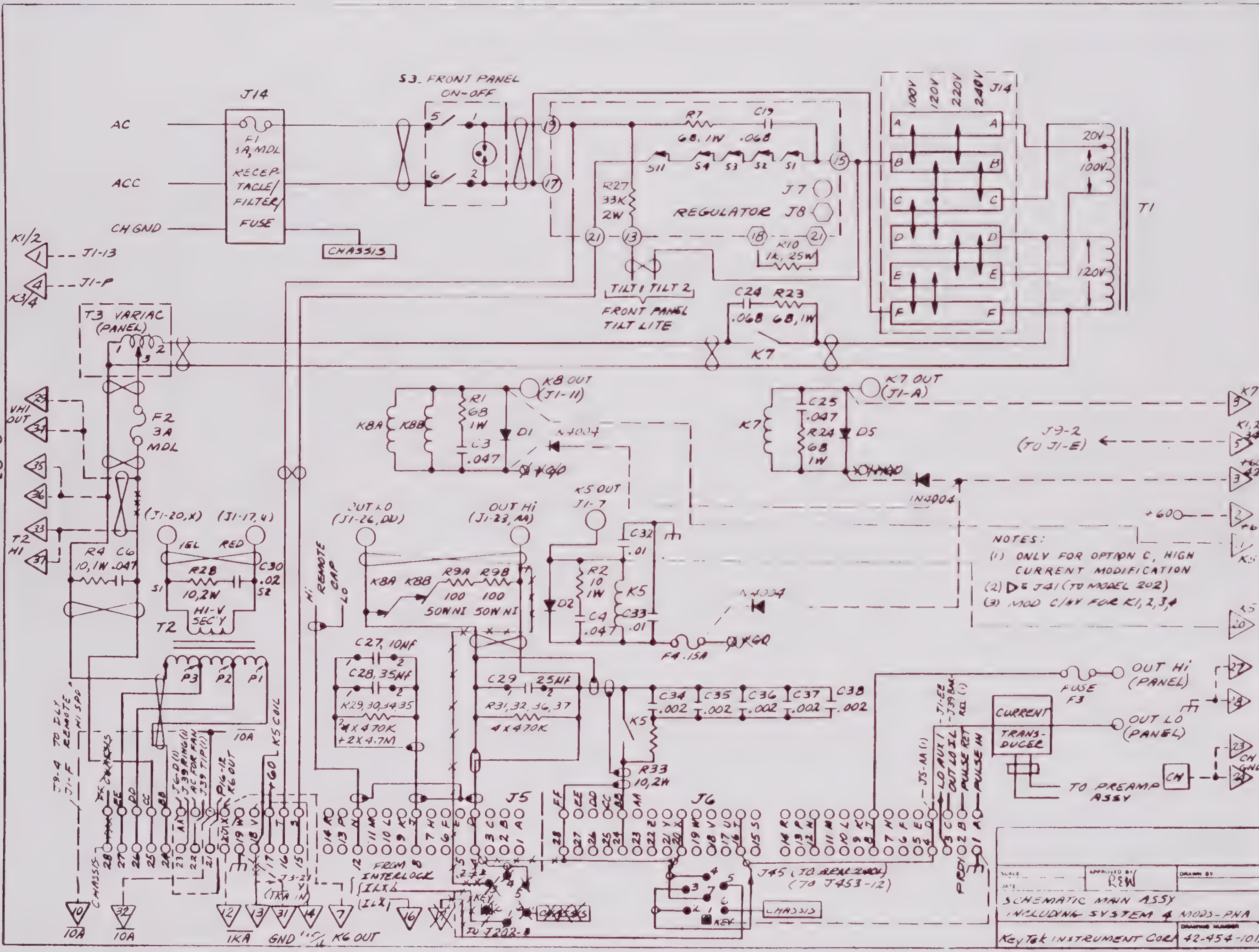
S3. FRONT PANEL ON-OFF
J14
AC
ACC
CH GND
F1 3A, MDL
RECEPTACLE/FILTER/FUSE
CHASSIS
K1/2
J1-13
K3/4
J1-P
R7 68, 1W
C19 .068
S11 S4 S3 S2 S1
R27 33K 2W
REGULATOR
J7
J8
R10 1K, 25W
TILT 1 TILT 2
FRONT PANEL TILT LITE
100V 120V 220V 240V
T1
20V
100V
120V
C24 .068
R23 68, 1W
K7
T3 VARIAC (PANEL)
F2 3A MDL
VHI OUT
T2 HI
K8 OUT (J1-11)
K8A K8B
R1 68 1W
C3 .047
D1
K7 OUT (J1-A)
C25 .047
R24 68 1W
D5
1N4004
J9-2 (TO J1-E)
K5 OUT J1-7
C32 .01
R2 10 1W
K5
C4 .047
C33 .01
D2
F4 .15A
OUT LO (J1-26, DD)
OUT HI (J1-23, AA)
R9A R9B
100 100
50W NI 50W NI
(J1-20, X)
(J1-17, 4)
IEL
RED
R4 10, 1W
C6 .047
R28 10, 2W
C30 .02
HI-V SEC'Y
T2
P3 P2 P1
HI REMOTE CAP LO
C27, 10MF
C28, 35MF
R29, 30, 34, 35
4 X 470K + 2 X 4.7M
C29 25MF
R31, 32, 36, 37
4 X 470K
C34 .002
C35 .002
C36 .002
C37 .002
C38 .002
R33 10, 2W
+60
NOTES:
(1) ONLY FOR OPTION C, HIGH CURRENT MODIFICATION
(2) ▷ = J41 (TO MODEL 202)
(3) MOD C/NV FOR K1, 2, 3, 4
OUT HI (PANEL)
FUSE F3
OUT LO (PANEL)
CURRENT TRANSDUCER
TO PREAMP ASSY
CH GND
J5
J6
J9-4 TO DLY
J1-F REMOTE HI SPD
K5 COIL
J6-D (1)
J39 RING (1)
AC FOR FAN
J39 TIP (1)
P16-12 K6 OUT
10A
CHASSIS
FROM INTERLOCK
J3-21
(TKA IN)
IKA
GND
K6 OUT
KEY
TO J202-B
J45 (TO J453-12)
J1-EE
J39 BK
LO AUX 1
OUT LO IL
PULSE RET
PULSE IN
J5-AA (1)
PRDY
SCHEMATIC MAIN ASSY INCLUDING SYSTEM 4 MODS-PNA
APPROVED BY RSW
KeyTek INSTRUMENT CORP.
42-454-101A

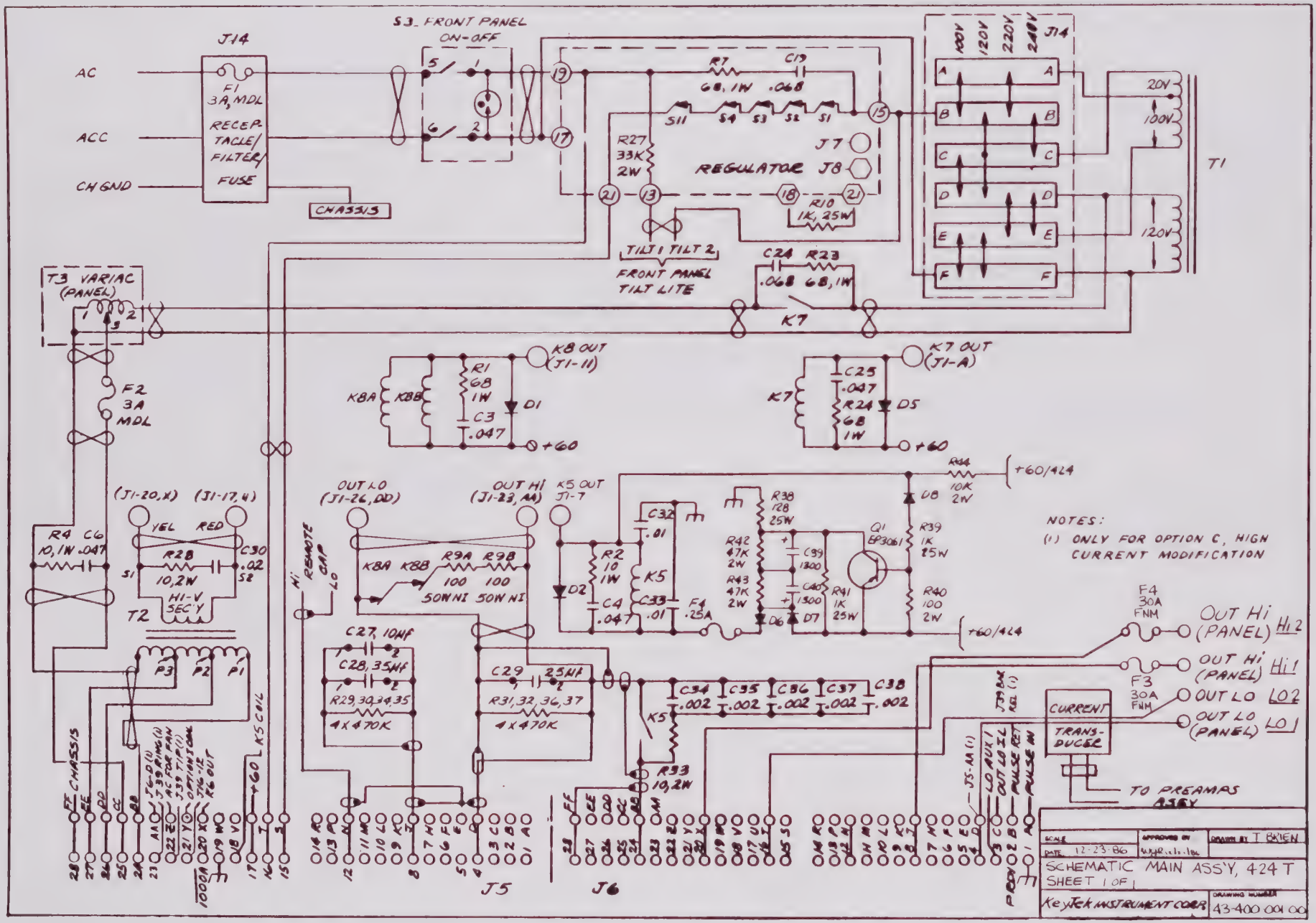
J14
AC
ACC
CH GND
F1 3A, MDL RECEPTACLE/FILTER/FUSE
CHASSIS
S3 FRONT PANEL ON-OFF
R7 68, 1W
C19 .068
S1 S2 S3 S4 S5
R27 33K 2W
REGULATOR
J7
J8
R10 1K, 25W
TILT 1 TILT 2
FRONT PANEL TILT LITE
C24 .068
R23 68, 1W
K7
100V
120V
220V
240V
20V
100V
120V
T1
T3 VARIAC (PANEL)
F2 3A MDL
K8A K8B
R1 68 1W
C3 .047
D1
K8 OUT (J1-11)
+60
K7
C25 .047
R24 68 1W
D5
K7 OUT (J1-A)
(J1-20,X)
(J1-17,4)
R4 10,1W
C6 .047
YEL
RED
R28 10,2W
C30 .02
S1
S2
HI-V SEC'Y
T2
OUT LO (J1-26,DD)
OUT HI (J1-23,AA)
K5 OUT J1-7
R9A 100 50W NI
R9B 100 50W NI
C32 .01
C33 .01
K5
F4 .25A
R2 10 1W
C4 .047
D2
R38 28 25W
R42 47K 2W
R43 47K 2W
C39 1300
C40 1300
R41 1K 25W
Q1 EP3061
D6
D7
D8
R39 1K 25W
R40 100 2W
R44 10K 2W
+60/424
NOTES:
(1) ONLY FOR OPTION C, HIGH CURRENT MODIFICATION
C27, 10MF
C28, 35MF
R29,30,34,35 4X470K
C29 25MF
R31,32,36,37 4X470K
C34 .002
C35 .002
C36 .002
C37 .002
C38 .002
R33 10,2W
F4 30A FNM
F3 30A FNM
OUT HI (PANEL) HI2
OUT HI (PANEL) HI1
OUT LO LO2
OUT LO (PANEL) LO1
CURRENT TRANSDUCER
TO PREAMPS ASSY
J5
J6
J5-A (1)
J5-B (1)
SCALE
DATE 12-23-86
APPROVED BY
DRAWN BY T. BRIEN
SCHEMATIC MAIN ASS'Y, 424T
SHEET 1 OF 1
KeyTek INSTRUMENT CORP.
DRAWING NUMBER 43-400 001 00

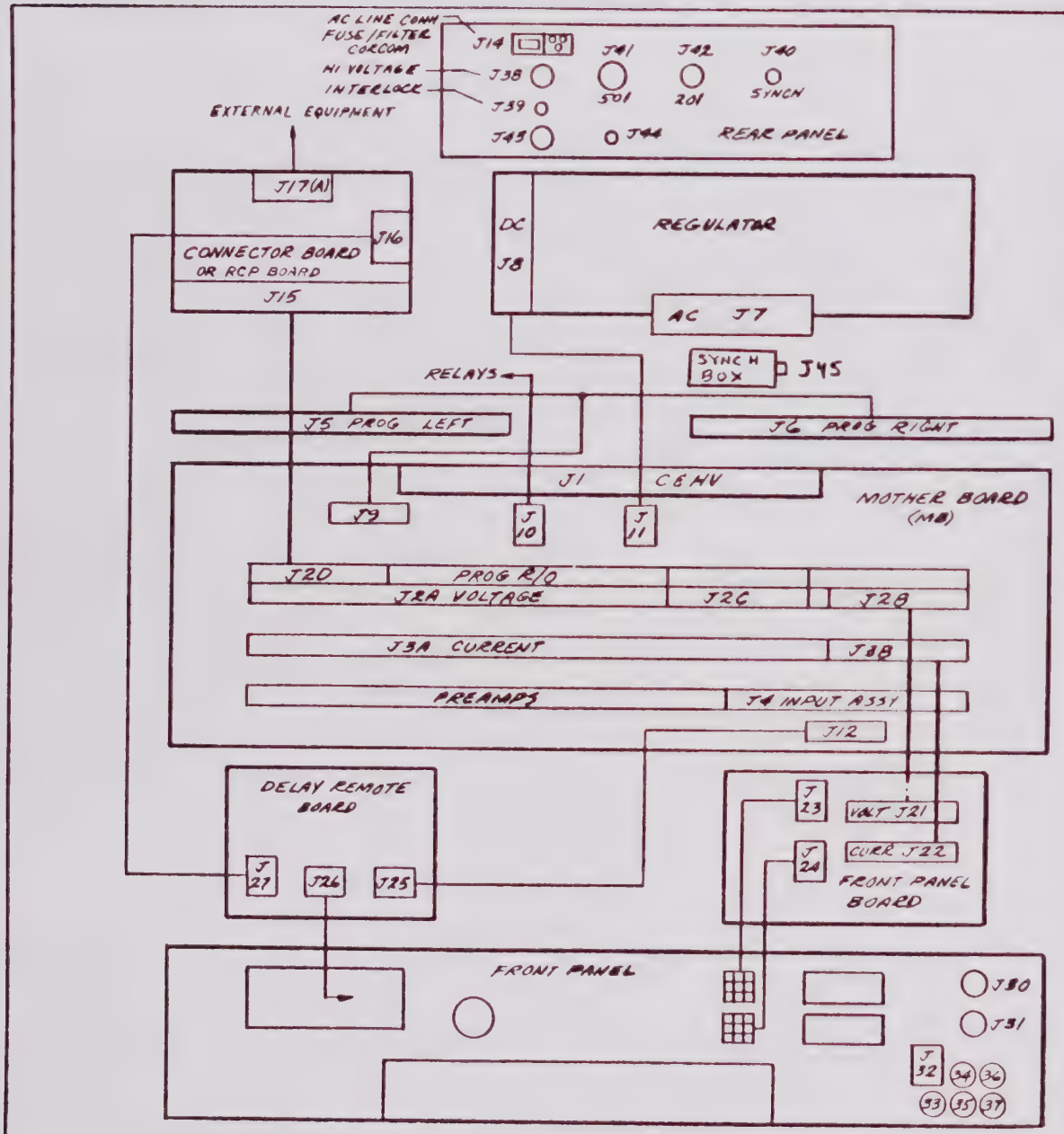


J1 C&HV
J2A VOLTAGE MAIN
J2B TO FP
J2C TO PROG R/O
J2D PROG/R.O. TO CONN BD
J3A CURRENT MAIN
J3B TO FP
J4 INPUT ASSY
J5 PROGRAMMER LEFT
J6 PROGRAMMER RIGHT
J7 REGULATOR AC
J8 REGULATOR DC
J9 MB TO PROG
J10 MB TO BOX
J11 MB TO REG
J12 MB TO J25 DELAY REMOTE BD
J13
J14 AC LINE CONN
J15 CONN BD TO PROG/READOUT BOARD J2D
J16 CONN BD J27 DELAY REMOTE BD
J17 CONN BD TO CUSTOMER
J18
J19
J20
J21 FP BOARD TO J2B VOLTAGE BOARD
J22 FP BOARD TO J3B CURRENT BOARD
J23 FP BOARD TO VOLTAGE DIGISWITCHES
J24 FP BOARD TO CURRENT DIGISWITCHES
J25 DELAY REMOTE BD TO J12 MB
J26 DELAY REMOTE BD TO FP
J27 DELAY REMOTE BD TO J16 CONN BD
J28
J29
J30 V MONITOR
J31 I MONITOR
J32 EXTERNAL ADAPTER
J33 CHASSIS, FP TERMINAL
J34 OUT HI
J35 OUT LO
J36 MEASURE HI
J37 MEASURE LO
J38 HI VOLTAGE TO MODEL 210
J39 INTERLOCK TO MODEL 210
J40 SYNCH (OPTION S)
J41 501 (OPTION V)
J42 201 (OPTION L)
J43 OPTION (AC/SOV) OR OPTION (SURGE OUT)
J44 IL WITH OPTION (SURGE OUT)
J45 SYNCH (OPTION S)

| | | |
|---|---|---|
| SCALE | APPROVED BY PSN | DRAWN BY BN |
| DATE 11/10/76 | | |

CONNECTOR LOCATIONS

KeyTek INSTRUMENT CORP. | DRAWING NUMBER 42-400-005A

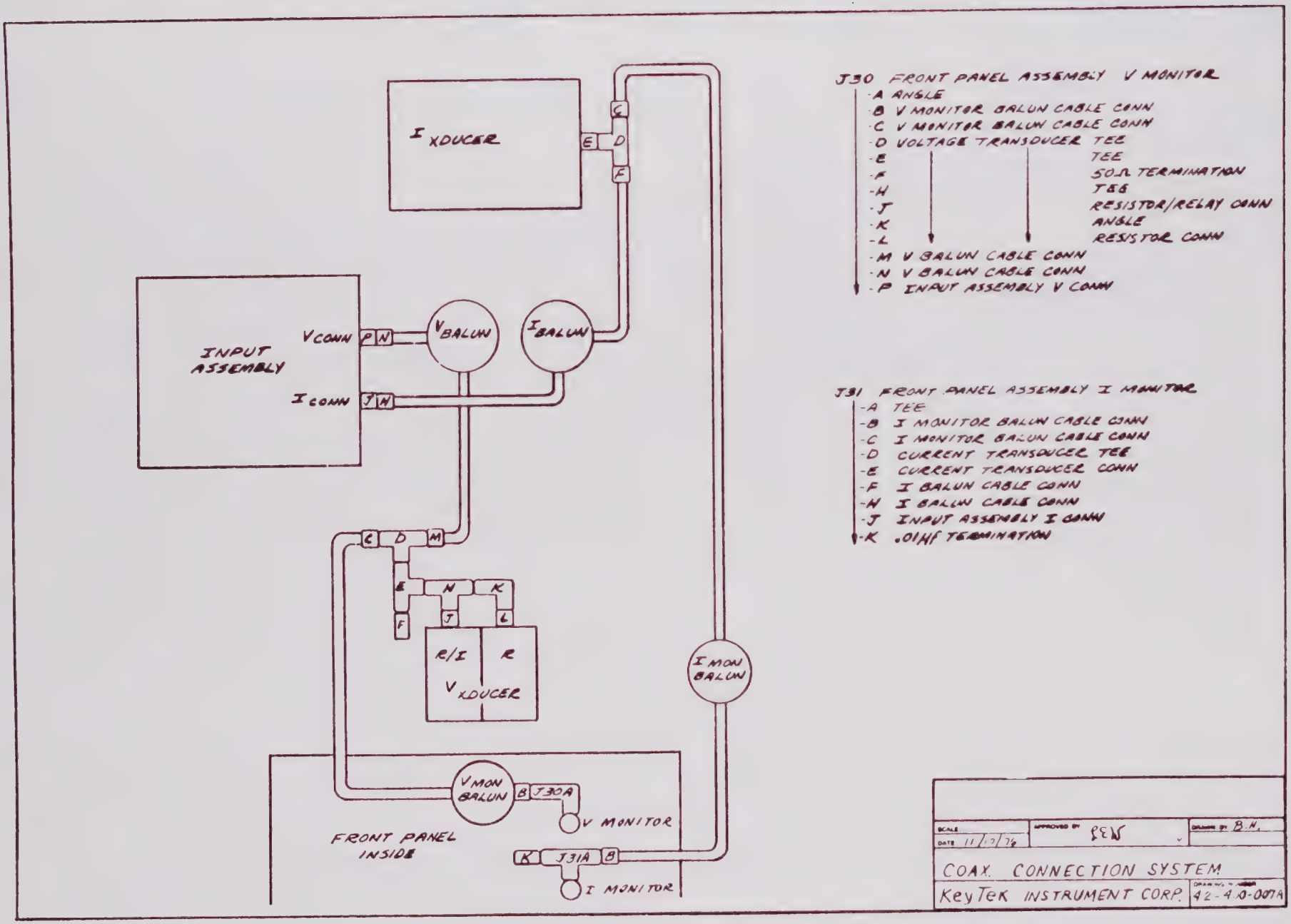
I XDUCER
INPUT ASSEMBLY
V CONN
I CONN
V BALUN
I BALUN
I MON BALUN
V MON BALUN
V XDUCER
R/I
R
J30A
J31A
V MONITOR
I MONITOR
FRONT PANEL INSIDE
J30 FRONT PANEL ASSEMBLY V MONITOR
-A ANGLE
-B V MONITOR BALUN CABLE CONN
-C V MONITOR BALUN CABLE CONN
-D VOLTAGE TRANSDUCER TEE
-E TEE
-F 50Ω TERMINATION
-H TEE
-J RESISTOR/RELAY CONN
-K ANGLE
-L RESISTOR CONN
-M V BALUN CABLE CONN
-N V BALUN CABLE CONN
-P INPUT ASSEMBLY V CONN
J31 FRONT PANEL ASSEMBLY I MONITOR
-A TEE
-B I MONITOR BALUN CABLE CONN
-C I MONITOR BALUN CABLE CONN
-D CURRENT TRANSDUCER TEE
-E CURRENT TRANSDUCER CONN
-F I BALUN CABLE CONN
-H I BALUN CABLE CONN
-J INPUT ASSEMBLY I CONN
-K .01HF TERMINATION
SCALE
DATE 11/17/76
APPROVED BY
DRAWN BY B.H.
COAX. CONNECTION SYSTEM
KeyTek INSTRUMENT CORP.
42-4.0-007A

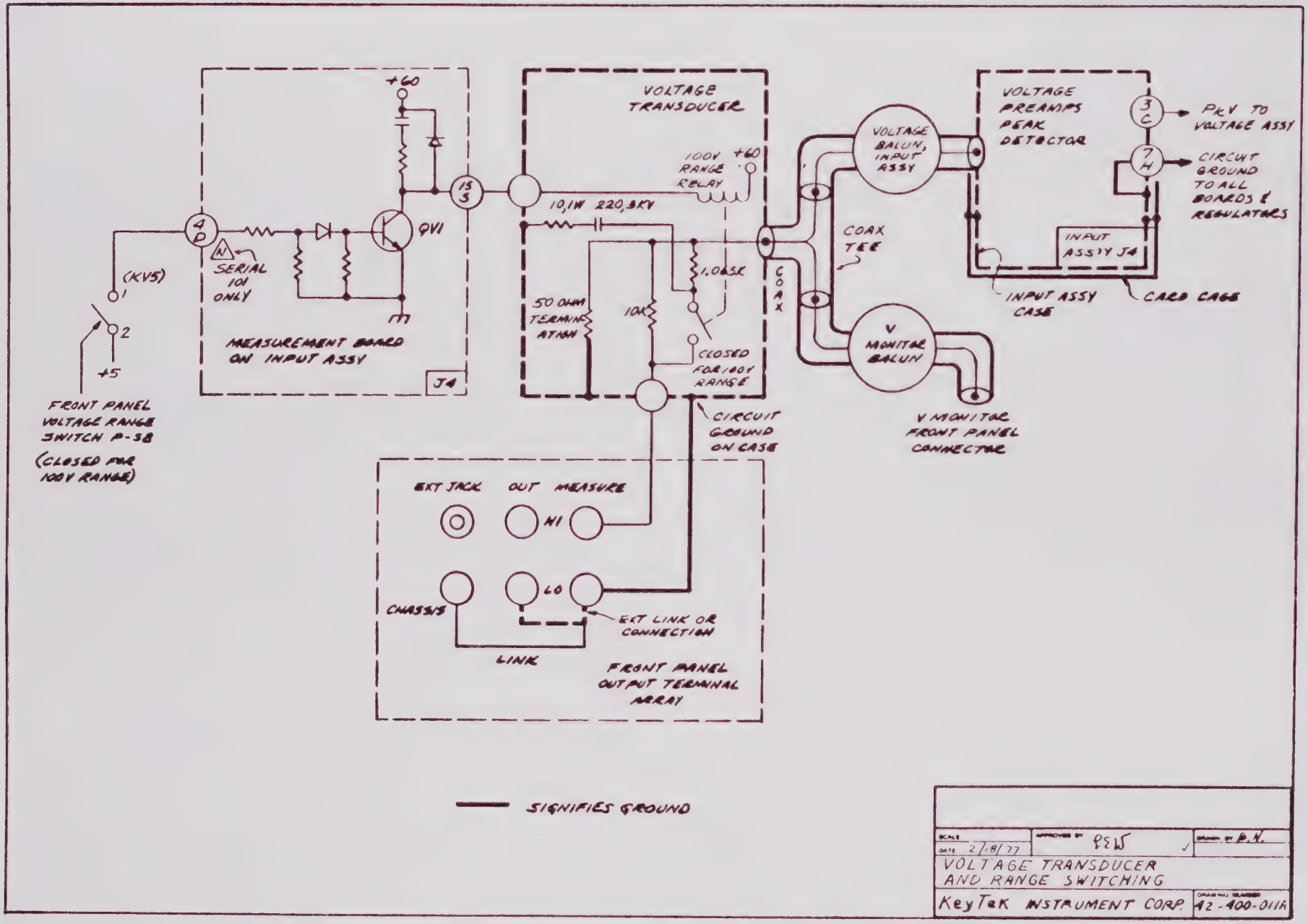

+60
VOLTAGE TRANSDUCER
100V RANGE RELAY
+60
10,1W 220,3KV
QV1
SERIAL 101 ONLY
(KV5)
1
2
+5
FRONT PANEL VOLTAGE RANGE SWITCH P-38
(CLOSED FOR 100V RANGE)
MEASUREMENT BOARD ON INPUT ASSY
J4
50 OHM TERMINATION
10K
1.065K
CLOSED FOR 100V RANGE
COAX
COAX TEE
VOLTAGE BALUN, INPUT ASSY
V MONITOR BALUN
V MONITOR FRONT PANEL CONNECTOR
VOLTAGE PREAMPS PEAK DETECTOR
PKV TO VOLTAGE ASSY
CIRCUIT GROUND TO ALL BOARDS & REGULATORS
INPUT ASS'Y J4
INPUT ASSY CASE
CARD CAGE
CIRCUIT GROUND ON CASE
EXT JACK
OUT
MEASURE
HI
LO
CHASSIS
LINK
EXT LINK OR CONNECTION
FRONT PANEL OUTPUT TERMINAL ARRAY
SIGNIFIES GROUND
SCALE
DATE 2/18/77
APPROVED BY PEW
DRAWN BY P.H.
VOLTAGE TRANSDUCER AND RANGE SWITCHING
KeyTek INSTRUMENT CORP.
DRAWING NUMBER 42-400-011A

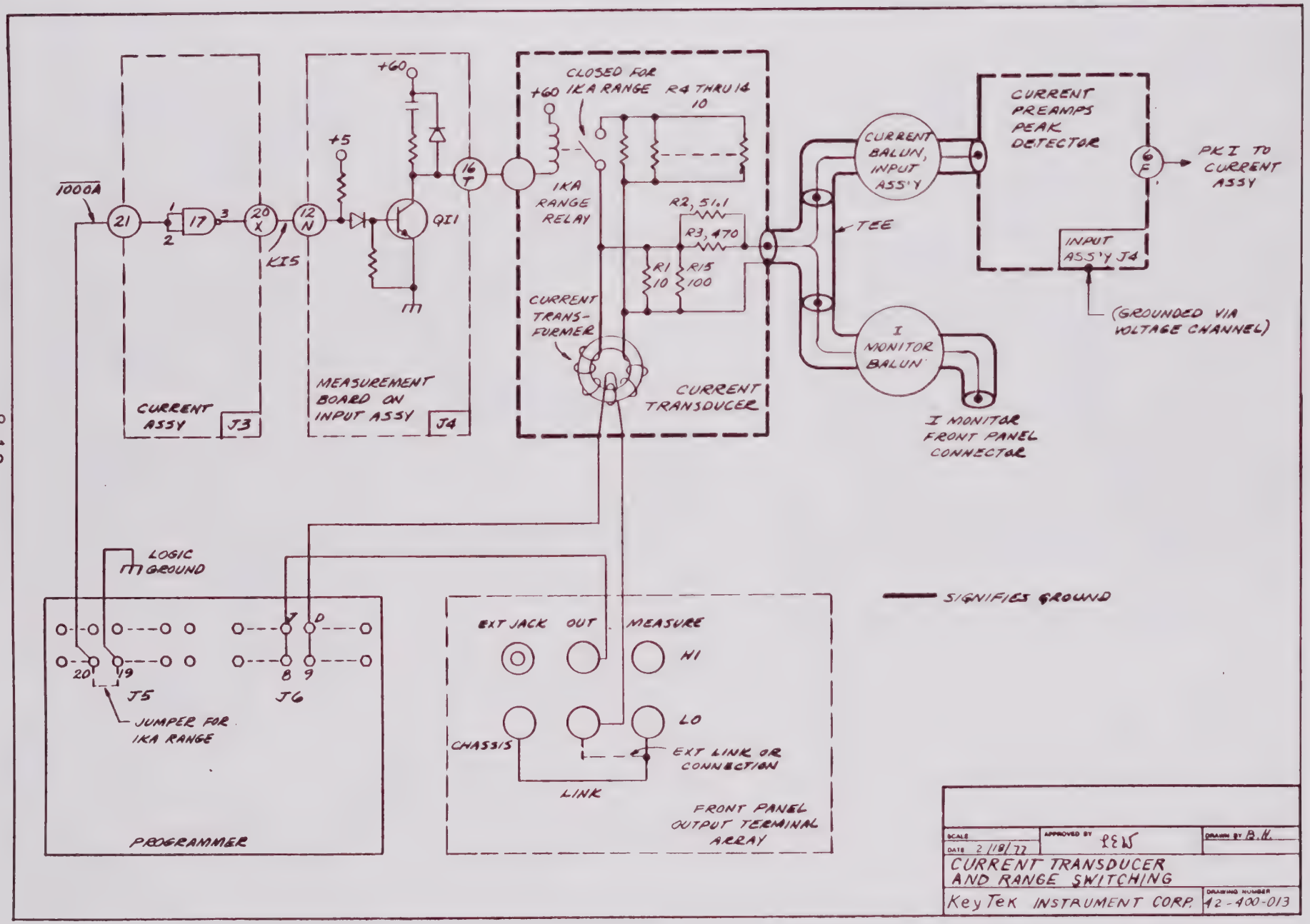


| | | |
|---|---|---|
| SCALE | APPROVED BY PEW | DRAWN BY B.H. |
| DATE 2/10/72 | | |
| CURRENT TRANSDUCER AND RANGE SWITCHING | | |
| KeyTek INSTRUMENT CORP. | | DRAWING NUMBER 12-400-013 |

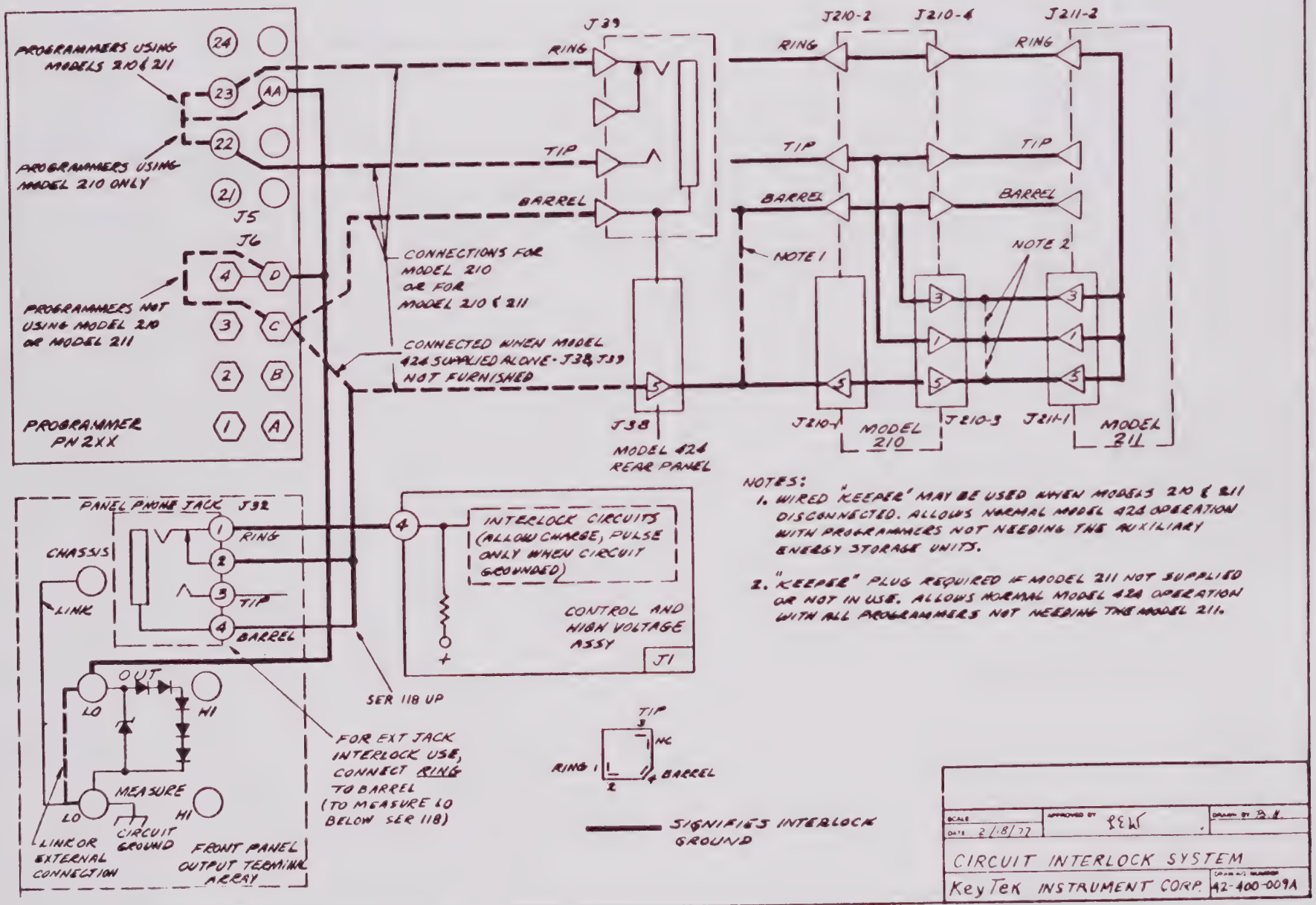
PROGRAMMERS USING MODELS 210 & 211
PROGRAMMERS USING MODEL 210 ONLY
PROGRAMMERS NOT USING MODEL 210 OR MODEL 211
PROGRAMMER PN 2XX
J5
J6
J39
RING
TIP
BARREL
J210-2
J210-4
J211-2
J210-1
J210-3
J211-1
MODEL 210
MODEL 211
NOTE 1
NOTE 2
CONNECTIONS FOR MODEL 210 OR FOR MODEL 210 & 211
CONNECTED WHEN MODEL 424 SUPPLIED ALONE - J38, J39 NOT FURNISHED
J38
MODEL 424 REAR PANEL
PANEL PHONE JACK J32
CHASSIS
LINK
OUT
LO
HI
MEASURE
CIRCUIT GROUND
LINK OR EXTERNAL CONNECTION
FRONT PANEL OUTPUT TERMINAL ARRAY
INTERLOCK CIRCUITS (ALLOW CHARGE, PULSE ONLY WHEN CIRCUIT GROUNDED)
CONTROL AND HIGH VOLTAGE ASSY
J1
SER 118 UP
FOR EXT JACK INTERLOCK USE, CONNECT RING TO BARREL (TO MEASURE LO BELOW SER 118)
NC
SIGNIFIES INTERLOCK GROUND
NOTES:
1. WIRED "KEEPER" MAY BE USED WHEN MODELS 210 & 211 DISCONNECTED. ALLOWS NORMAL MODEL 424 OPERATION WITH PROGRAMMERS NOT NEEDING THE AUXILIARY ENERGY STORAGE UNITS.
2. "KEEPER" PLUG REQUIRED IF MODEL 211 NOT SUPPLIED OR NOT IN USE. ALLOWS NORMAL MODEL 424 OPERATION WITH ALL PROGRAMMERS NOT NEEDING THE MODEL 211.
SCALE
DATE 2/18/77
APPROVED BY
DRAWN BY
CIRCUIT INTERLOCK SYSTEM
KeyTek INSTRUMENT CORP.
42-400-009A

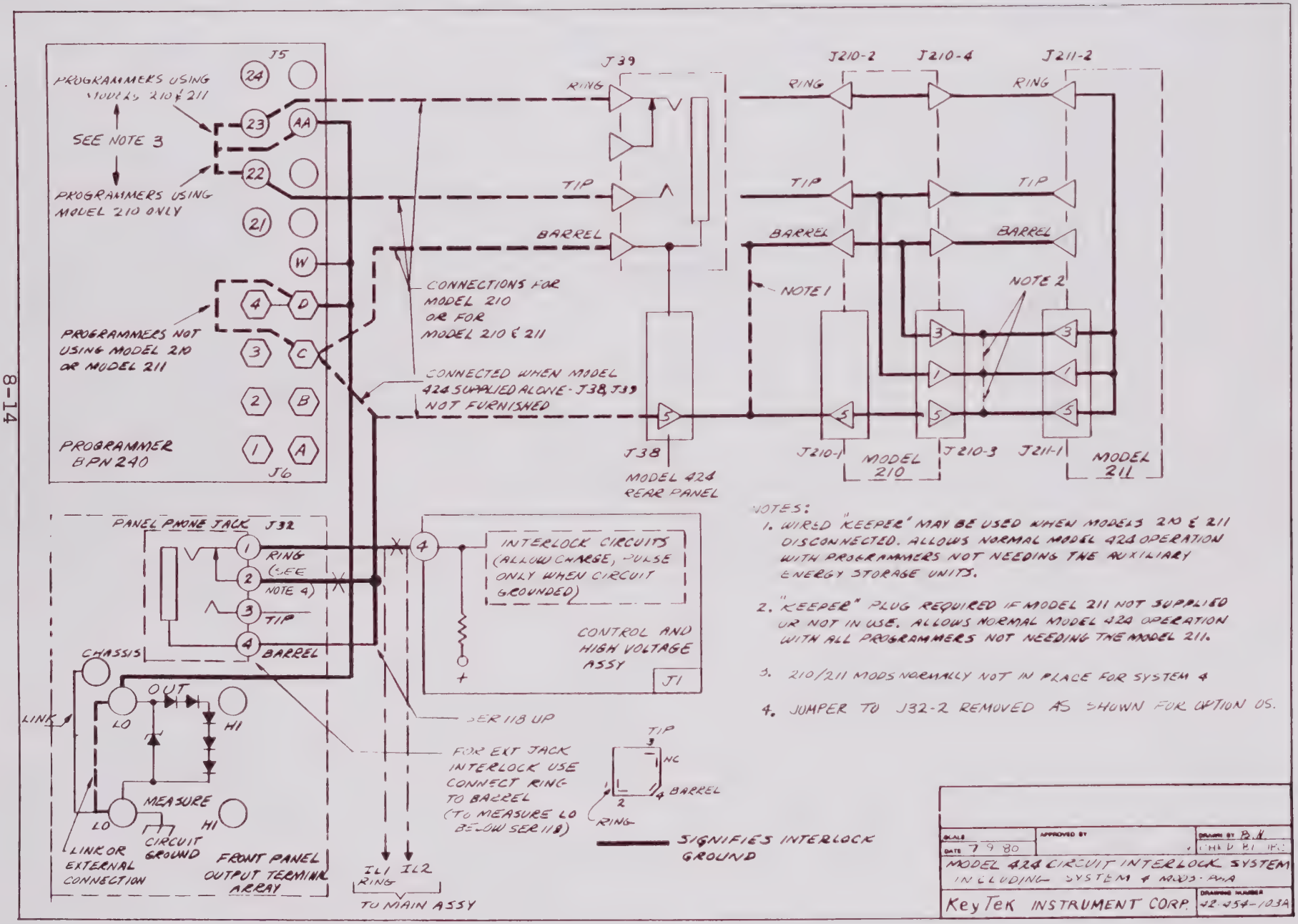


NOTES:

1. WIRED "KEEPER" MAY BE USED WHEN MODELS 210 & 211 DISCONNECTED. ALLOWS NORMAL MODEL 424 OPERATION WITH PROGRAMMERS NOT NEEDING THE AUXILIARY ENERGY STORAGE UNITS.
2. "KEEPER" PLUG REQUIRED IF MODEL 211 NOT SUPPLIED OR NOT IN USE. ALLOWS NORMAL MODEL 424 OPERATION WITH ALL PROGRAMMERS NOT NEEDING THE MODEL 211.
3. 210/211 MODS NORMALLY NOT IN PLACE FOR SYSTEM 4
4. JUMPER TO J32-2 REMOVED AS SHOWN FOR OPTION 05.

| | | |
|---|---|---|
| SCALE | APPROVED BY | DRAWN BY R.W. |
| DATE 7 9 80 | | CHK'D BY |
| MODEL 424 CIRCUIT INTERLOCK SYSTEM INCLUDING SYSTEM 4 MODS - REV A | | |
| KeyTek INSTRUMENT CORP. | | DRAWING NUMBER 42-454-103A |

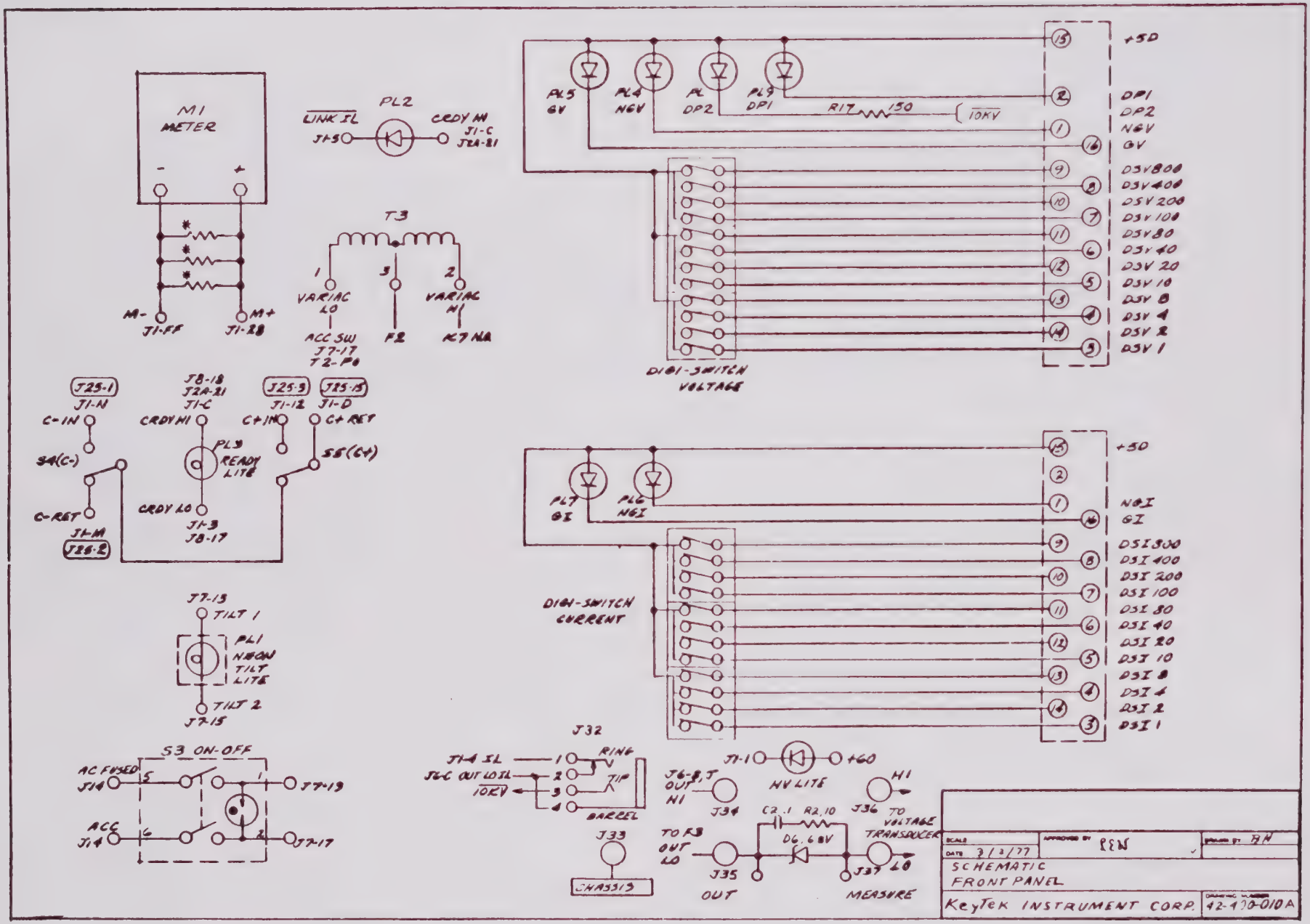


| | | |
|---|---|---|
| SCALE | APPROVED BY RSW | DRAWN BY BN |
| DATE 3/3/77 | | |
| SCHEMATIC FRONT PANEL | | |
| KeyTek INSTRUMENT CORP. | | DRAWING NUMBER 42-410-010A |

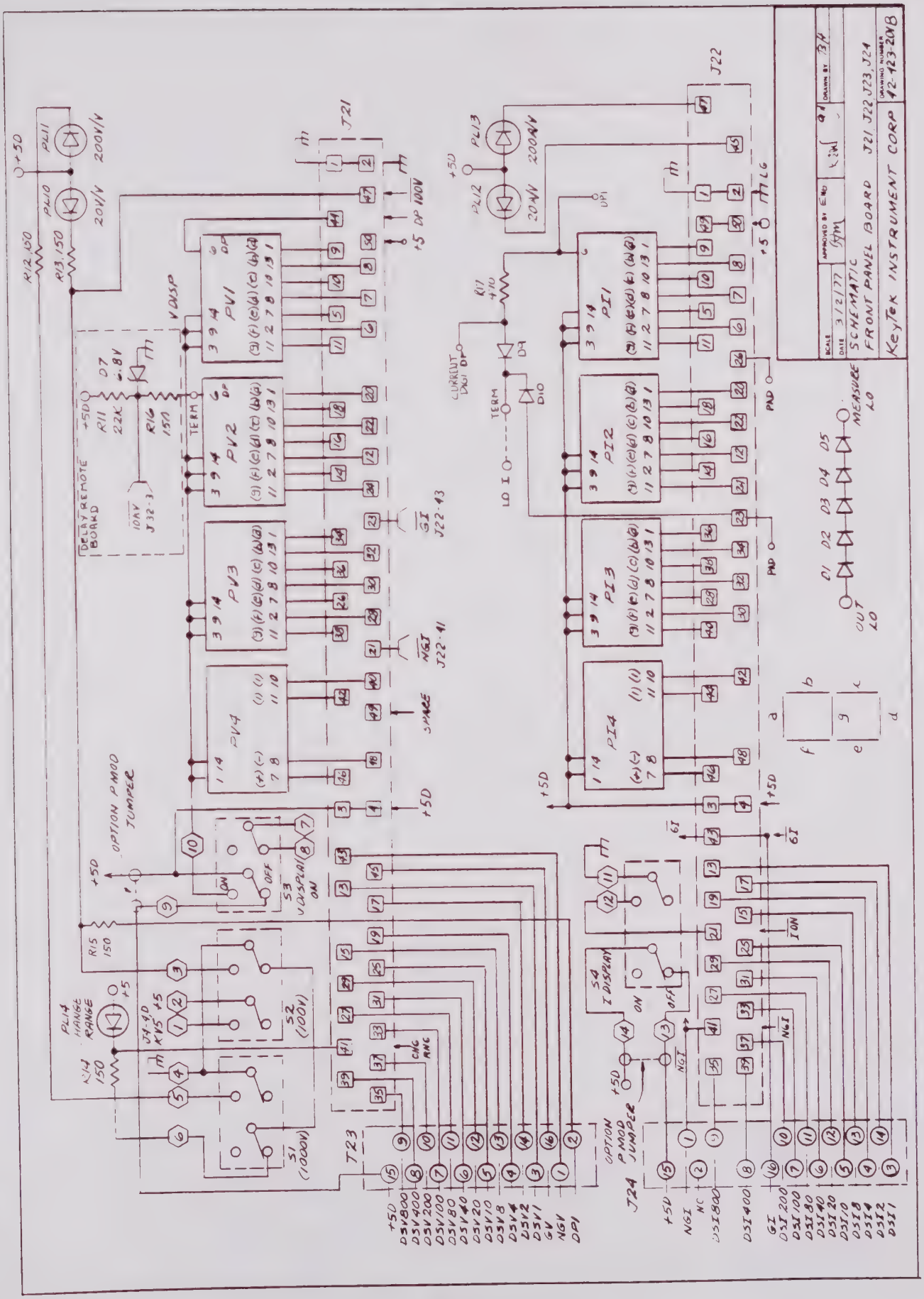
SCHEMATIC
FRONT PANEL BOARD J21, J22, J23, J24
KeyTek INSTRUMENT CORP
42-423-201B
DRAWING NUMBER
DRAWN BY
APPROVED BY
DATE 3/2/77
SCALE
PV1
PV2
PV3
PV4
PI1
PI2
PI3
PI4
J21
J22
J23
J24
DELAY REMOTE BOARD
OPTION PMOD JUMPER
PL14 HANGE RANGE
S1 (1000V)
S2 (100V)
S3 V DISPLAY ON
S4 I DISPLAY
MEASURE LO
OUT LO
CURRENT DIGI DP
TERM
SPARE
PAD
+5D
+5 DP 100V
V DISP
10KV J32-3
J22-43
J22-41
DSV800
DSV400
DSV200
DSV100
DSV80
DSV40
DSV20
DSV10
DSV8
DSV4
DSV2
DSV1
GV
NGV
DP1
NGI
NC
DSI800
DSI400
GI
DSI200
DSI100
DSI80
DSI40
DSI20
DSI10
DSI8
DSI4
DSI2
DSI1

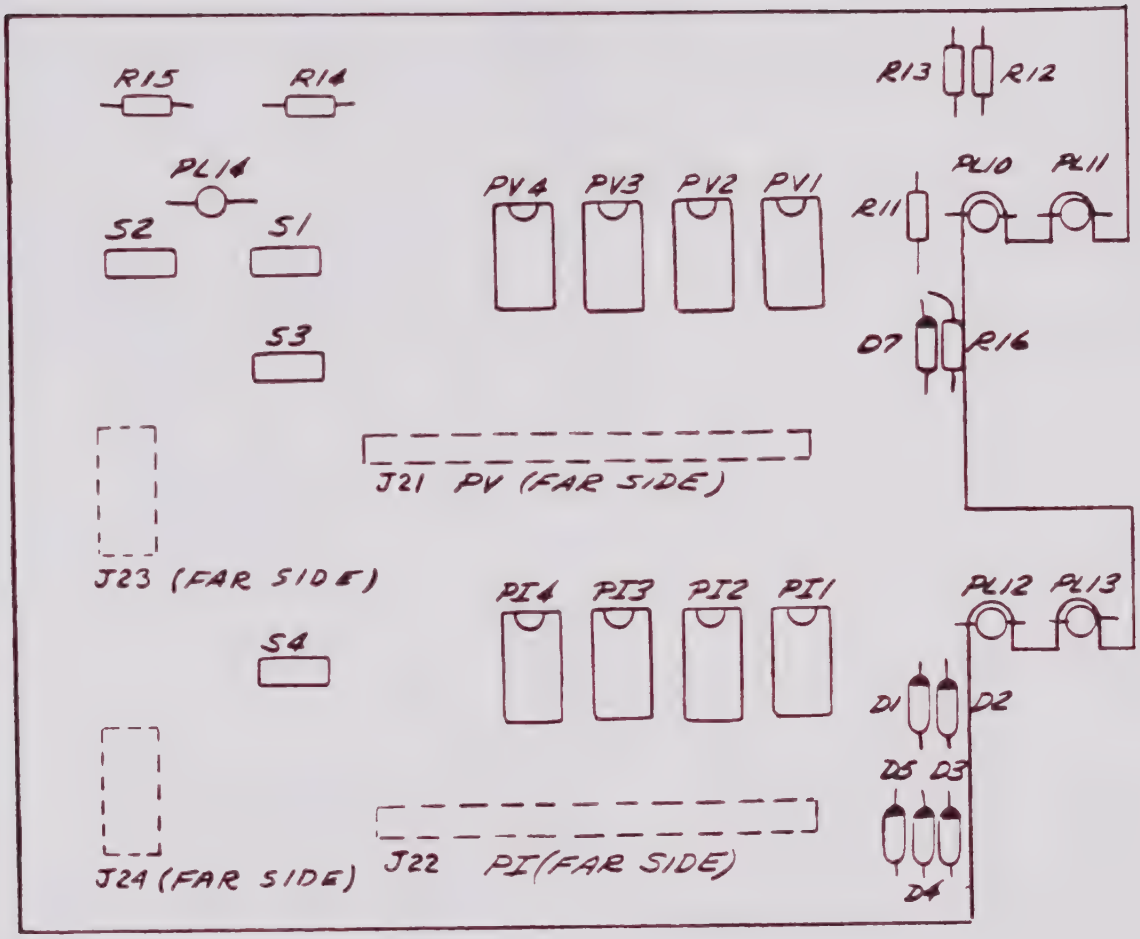


| | | |
|---|---|---|
| | | |
| SCALE: | APPROVED BY REW | DRAWN BY |
| DATE: 10/24/76 | | |
| COMPONET LOCATION FRONT FANEL BOARD | | |
| KeyTek INSTRUMENT CORP. | | DRAWING NUMBER 42-423-200 |

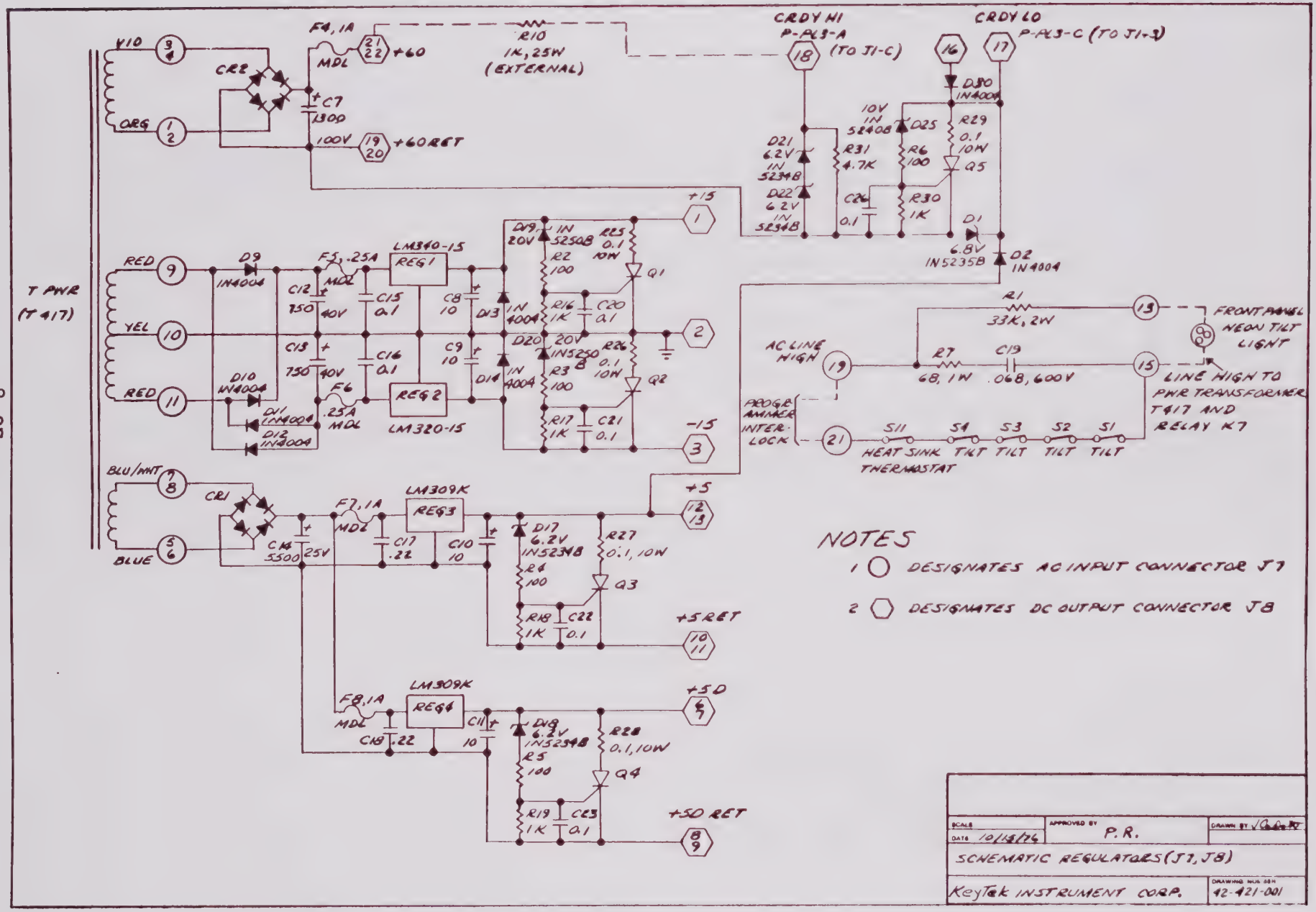
T PWR (T417)
RED
YEL
RED
BLU/WHT
BLUE
CR2
CR1
F4, 1A MDL
F5, .25A MDL
F6, .25A MDL
F7, 1A MDL
F8, 1A MDL
+60
+60 RET
R10 1K, 25W (EXTERNAL)
LM340-15 REG1
LM320-15 REG2
LM309K REG3
LM309K REG4
+15
-15
+5
+5 RET
+50
+50 RET
CRDY HI P-PL3-A (TO J1-C)
CRDY LO P-PL3-C (TO J1-2)
D30 IN4004
D21 6.2V IN5234B
D22 6.2V IN5234B
D1 6.8V IN5235B
D2 IN4004
Q25
Q5
R29 0.1 10W
R31 4.7K
R6 100
R30 1K
R1 33K, 2W
R7 68, 1W
C19 .068, 600V
AC LINE HIGH
PROBE AMMAC INTERLOCK
S11 HEAT SINK THERMOSTAT
S4 TILT
S3 TILT
S2 TILT
S1 TILT
FRONT PANEL NEON TILT LIGHT
LINE HIGH TO PWR TRANSFORMER T417 AND RELAY K7
D17 6.2V IN5234B
D18 6.2V IN5234B
D19 20V IN5250B
D20 20V IN5250B
Q1
Q2
Q3
Q4
R27 0.1, 10W
R28 0.1, 10W
R25 0.1 10W
R26 0.1 10W
NOTES
1 ○ DESIGNATES AC INPUT CONNECTOR J7
2 ⬡ DESIGNATES DC OUTPUT CONNECTOR J8
SCALE
DATE 10/15/74
APPROVED BY P.R.
DRAWN BY
SCHEMATIC REGULATORS (J7, J8)
KeyTek INSTRUMENT CORP.
DRAWING NUMBER 42-421-001

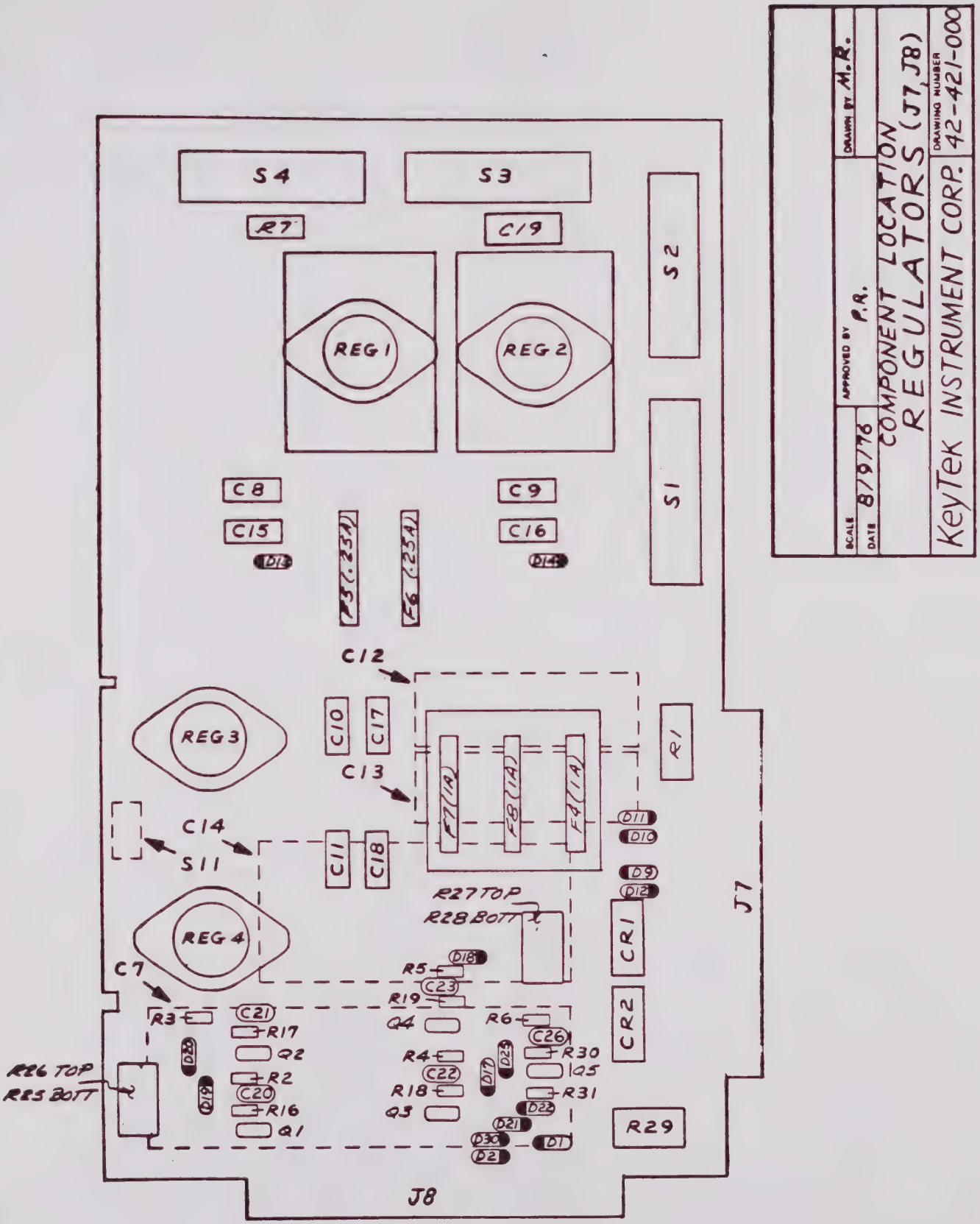
S4
S3
R7
C19
S2
REG 1
REG 2
S1
C8
C9
C15
C16
D13
D14
F5 (.25A)
F6 (.25A)
C12
REG 3
C10
C17
R1
C13
F7 (1A)
F8 (1A)
F4 (1A)
D11
D10
C14
S11
C11
C18
D9
D12
R27 TOP
R28 BOTT
J7
REG 4
CR1
D18
R5
C7
C23
R19
R3
C21
R17
Q4
R6
CR2
C26
Q2
R4
R30
D20
D23
Q5
R26 TOP
R25 BOTT
R2
C22
D17
R18
R31
D19
C20
R16
Q3
D22
D21
Q1
R29
D30
D1
D2
J8
SCALE
DATE 8/9/76
APPROVED BY P.R.
DRAWN BY M.R.
COMPONENT LOCATION
REGULATORS (J7, J8)
KeyTek INSTRUMENT CORP.
DRAWING NUMBER 42-421-000

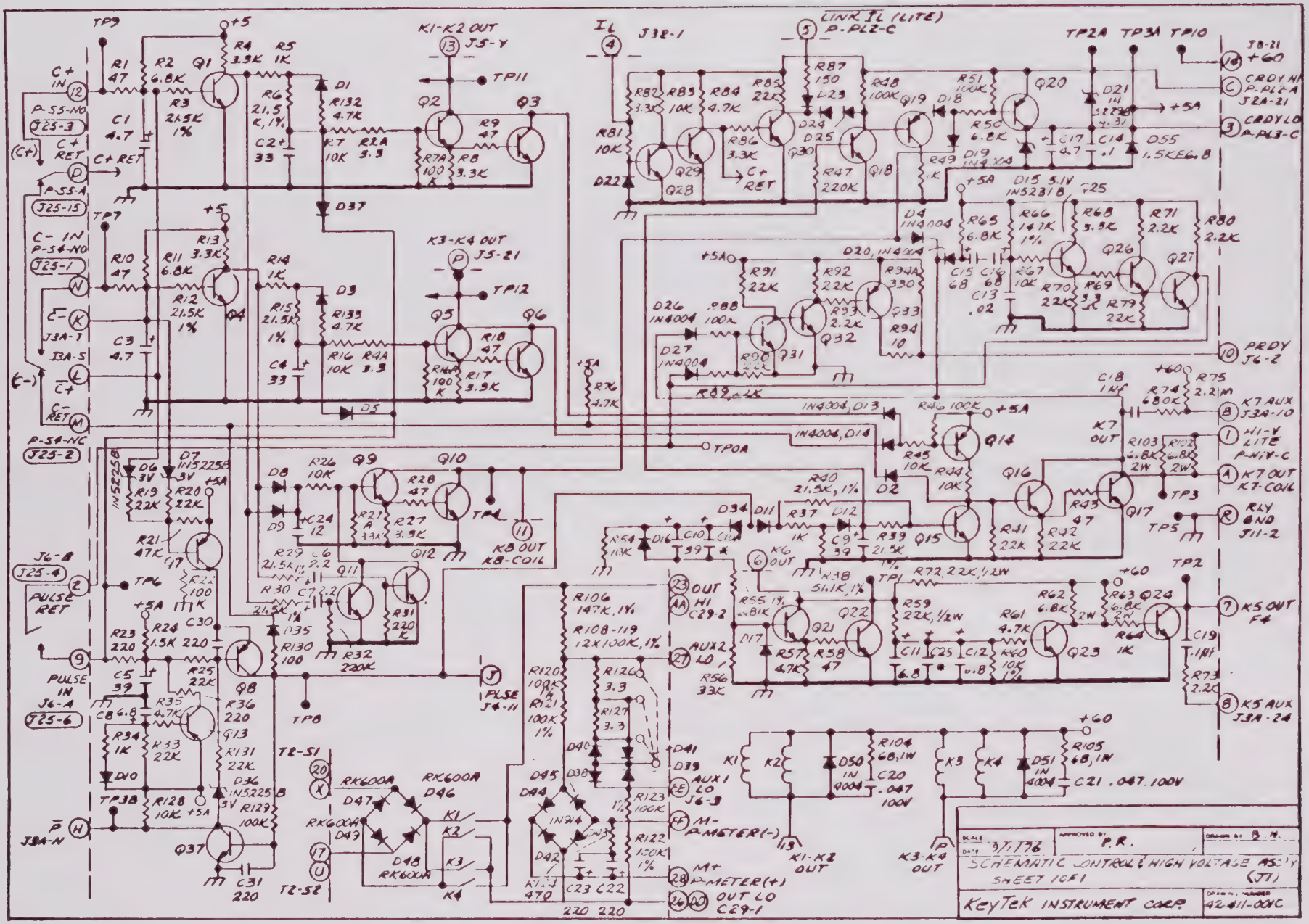
SCHEMATIC CONTROL & HIGH VOLTAGE ASS'Y
SHEET 1 OF 1
(J1)
KeyTek INSTRUMENT CORP.
42-411-001C
P.R.
B.H.
3/1/76
LINK IL (LITE) P-PL2-C
K1-K2 OUT J5-Y
K3-K4 OUT J5-21
K8 OUT K8-COIL
K7 OUT
K6 OUT
PRDY J6-2
K7 AUX J3A-10
HI-V LITE P-HV-C
K7 OUT K7-COIL
RLY GND J11-2
K5 OUT F4
K5 AUX J3A-24
OUT HI C29-2
AUX2 LO
AUX1 LO J6-3
M- P-METER(-)
M+ P-METER(+)
OUT LO C29-1
PULSE RET
PULSE IN J6-A J25-6
P-S5-NO J25-3
P-S5-A J25-15
P-S4-NO J25-1
P-S4-NC J25-2
J6-B J25-4
PLSE J4-11
T2-S1
T2-S2
K1-K2 OUT
K3-K4 OUT

REDUCE AREA WITHIN BLUE RECTANGLE TO 8½x11 (to 66%)

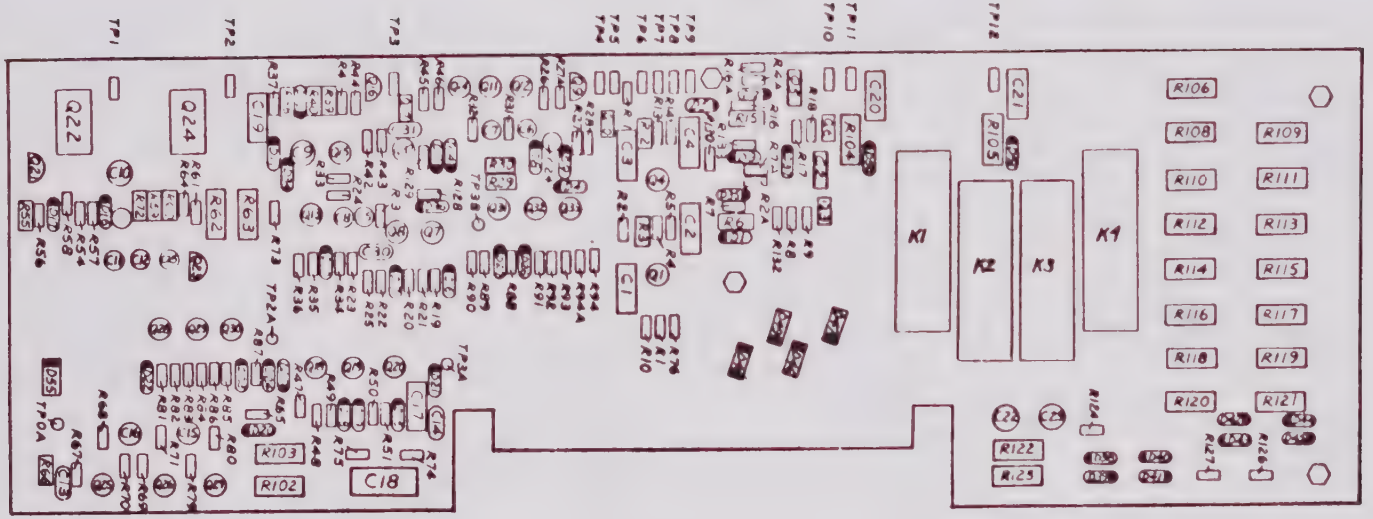


| | | |
|---|---|---|
| SCALE | APPROVED BY P.R. ✓ | DRAWN BY M.R. |
| DATE 8/9/76 | | |

COMPONENT LOCATION
CONTROL & HIGH VOLTAGE

KeyTek INSTRUMENT CORP. | DRAWING NUMBER 42-411-0008

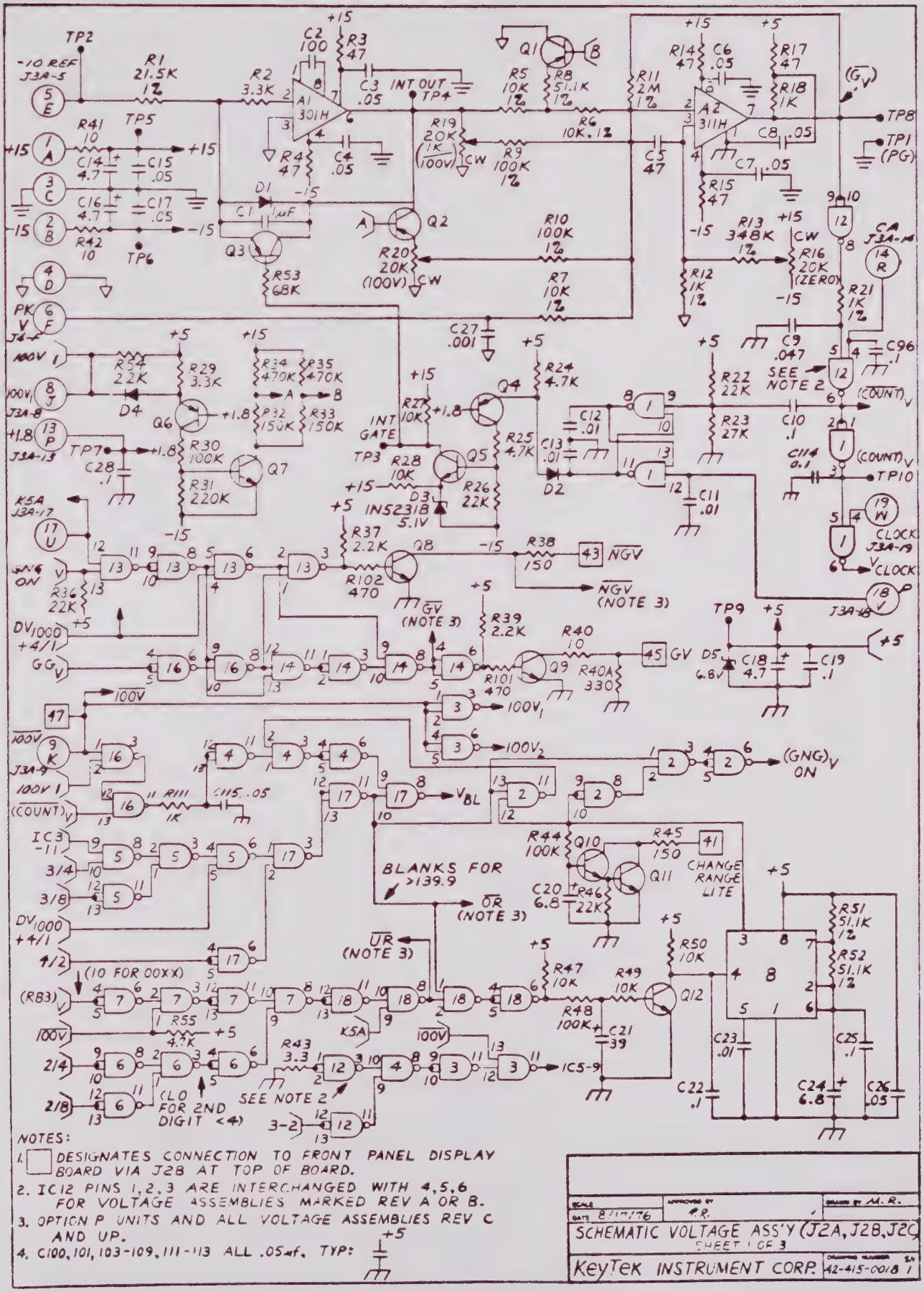
SCHEMATIC VOLTAGE ASS'Y (J2A, J2B, J2C)
SHEET 1 OF 3
KeyTek INSTRUMENT CORP.
42-415-0018 1
DATE 8/17/76
DRAWN BY M. R.
NOTES:
1. ☐ DESIGNATES CONNECTION TO FRONT PANEL DISPLAY BOARD VIA J2B AT TOP OF BOARD.
2. IC12 PINS 1,2,3 ARE INTERCHANGED WITH 4,5,6 FOR VOLTAGE ASSEMBLIES MARKED REV A OR B.
3. OPTION P UNITS AND ALL VOLTAGE ASSEMBLIES REV C AND UP.
4. C100, 101, 103-109, 111-113 ALL .05μf, TYP:
BLANKS FOR >139.9
CHANGE RANGE LITE
SEE NOTE 2
(CLO FOR 2ND DIGIT <4)
(10 FOR 00XX)

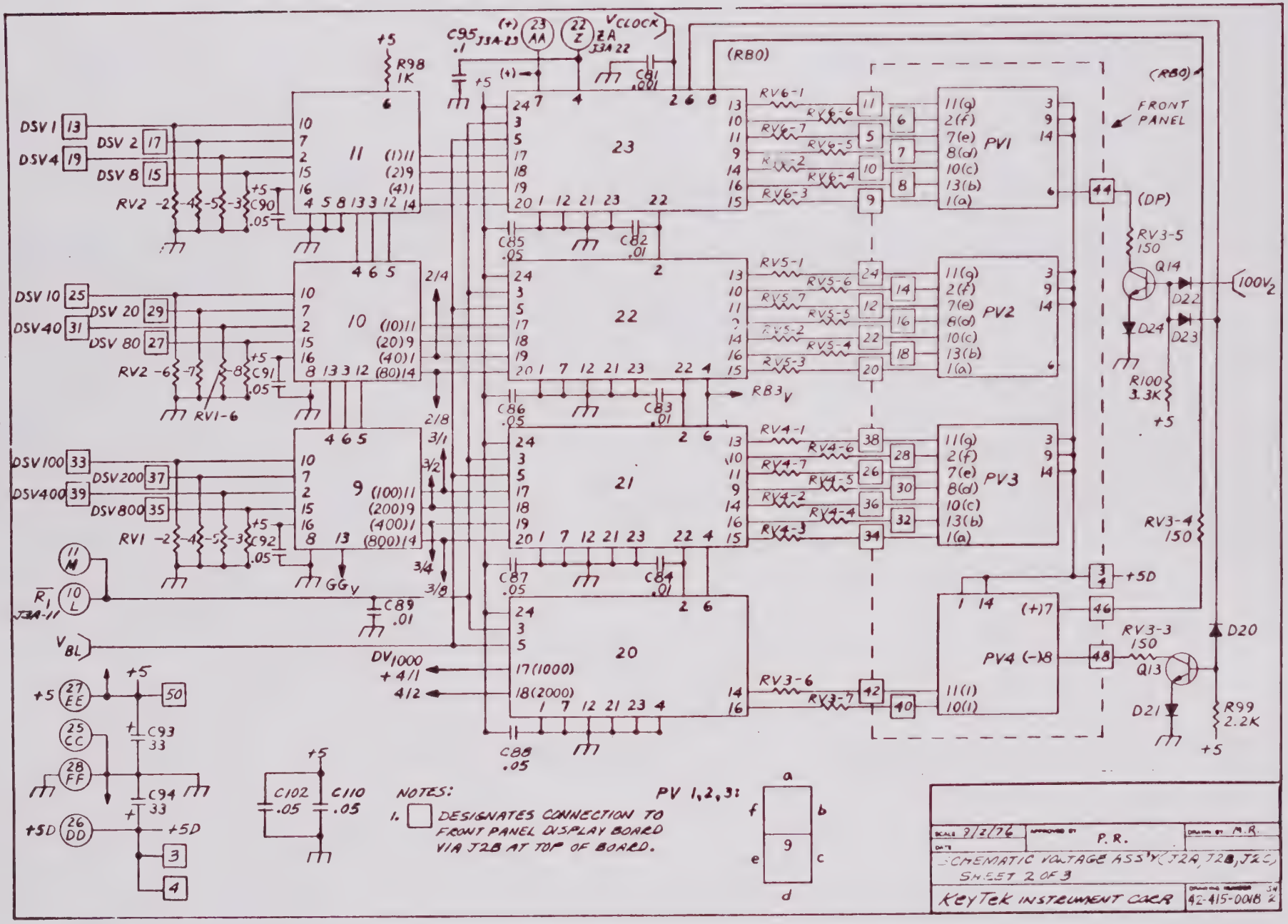
DSV 1
DSV 2
DSV 4
DSV 8
DSV 10
DSV 20
DSV 40
DSV 80
DSV 100
DSV 200
DSV 400
DSV 800
RV2
RV1
R98 1K
C95 .1
C81 .001
C85 .05
C82 .01
C86 .05
C83 .01
C87 .05
C84 .01
C89 .01
C90 .05
C91 .05
C92 .05
C93 33
C94 33
C102 .05
C110 .05
RV6-1
RV6-6
RV6-7
RV6-5
RV6-2
RV6-4
RV6-3
RV5-1
RV5-6
RV5-7
RV5-5
RV5-2
RV5-4
RV5-3
RV4-1
RV4-6
RV4-7
RV4-5
RV4-2
RV4-4
RV4-3
RV3-6
RV3-7
PV1
PV2
PV3
PV4 (-)8
FRONT PANEL
(RBO)
RV3-5 150
RV3-4 150
RV3-3 150
Q14
Q13
D22
D23
D24
D20
D21
R100 3.3K
R99 2.2K
RB3V
DV1000
100V2
NOTES:
1. DESIGNATES CONNECTION TO FRONT PANEL DISPLAY BOARD VIA J2B AT TOP OF BOARD.
PV 1,2,3:
SCHEMATIC VOLTAGE ASS'Y (J2A, J2B, J2C)
SHEET 2 OF 3
KeyTek INSTRUMENT CORP
42-415-0018

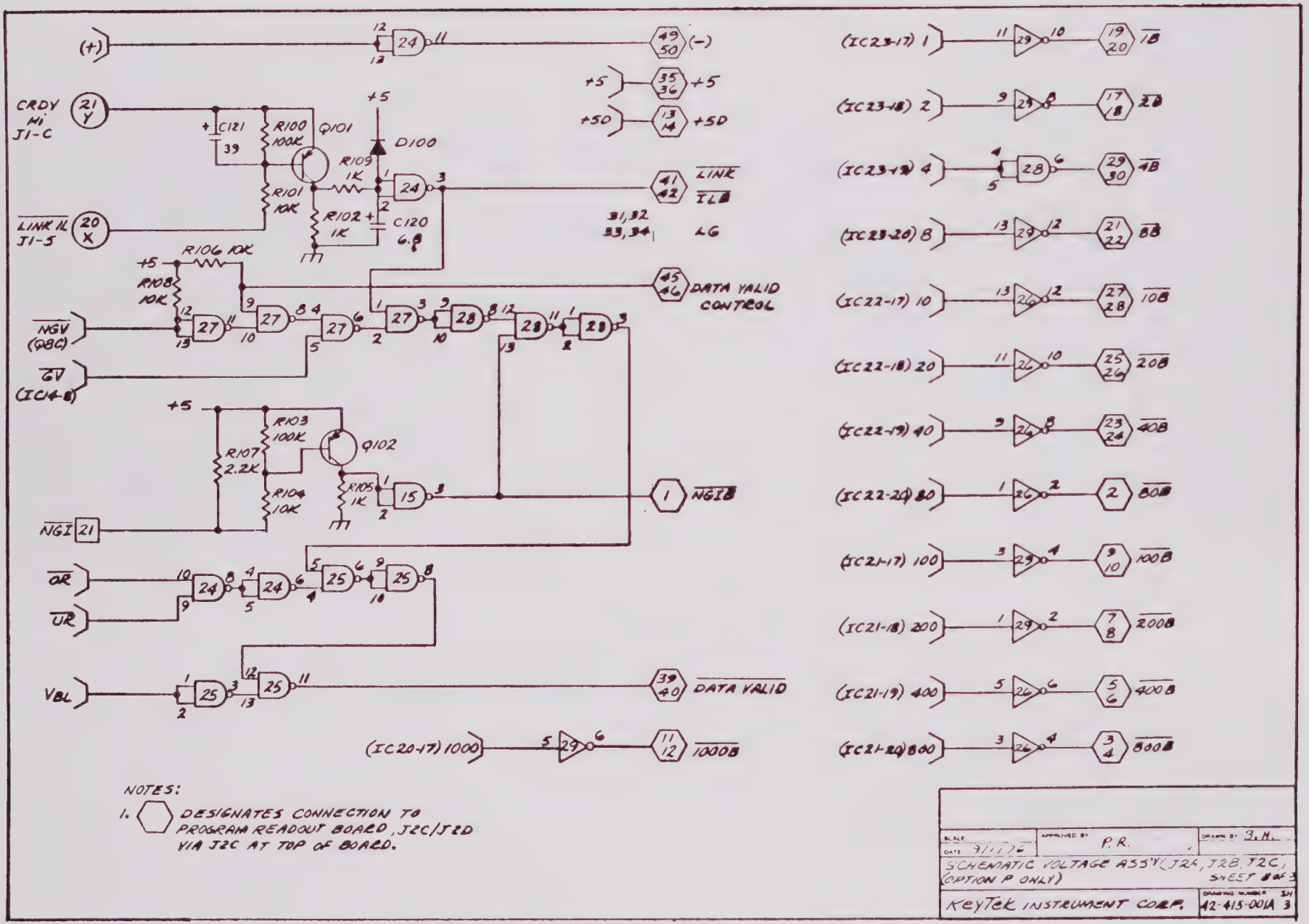


NOTES:

1. ⬡ DESIGNATES CONNECTION TO PROGRAM READOUT BOARD, J2C/J2D VIA J2C AT TOP OF BOARD.

| | | |
|---|---|---|
| SCALE | APPROVED BY P.R. | DRAWN BY |
| DATE 9/11/76 | SCHEMATIC VOLTAGE ASS'Y (J24, J2B, J2C) (OPTION P ONLY) | SHEET # OF 3 |
| KeyTek INSTRUMENT CORP. | | DRAWING NUMBER 42-415-001A 3 |

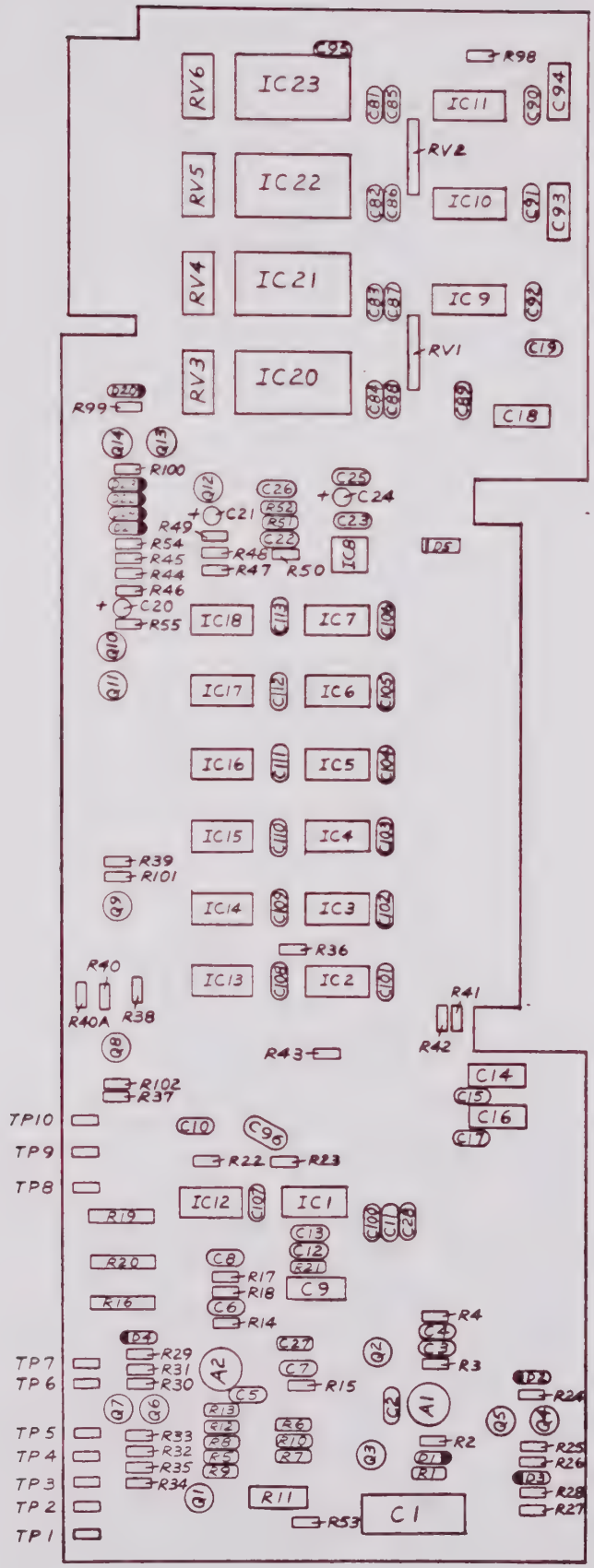


| | | | |
|---|---|---|---|
| SCALE | APPROVED BY P.R. | DRAWN BY M.R. | |
| DATE 8/9/76 | COMPONENT LOCATION VOLTAGE ASSEMBLY | | |
| KeyTek INSTRUMENT CORP. | | DRAWING NUMBER | 42-415-000A |

REDUCE AREA WITHIN BLUE RECTANGLE TO 8½ x 11 (to 66%)

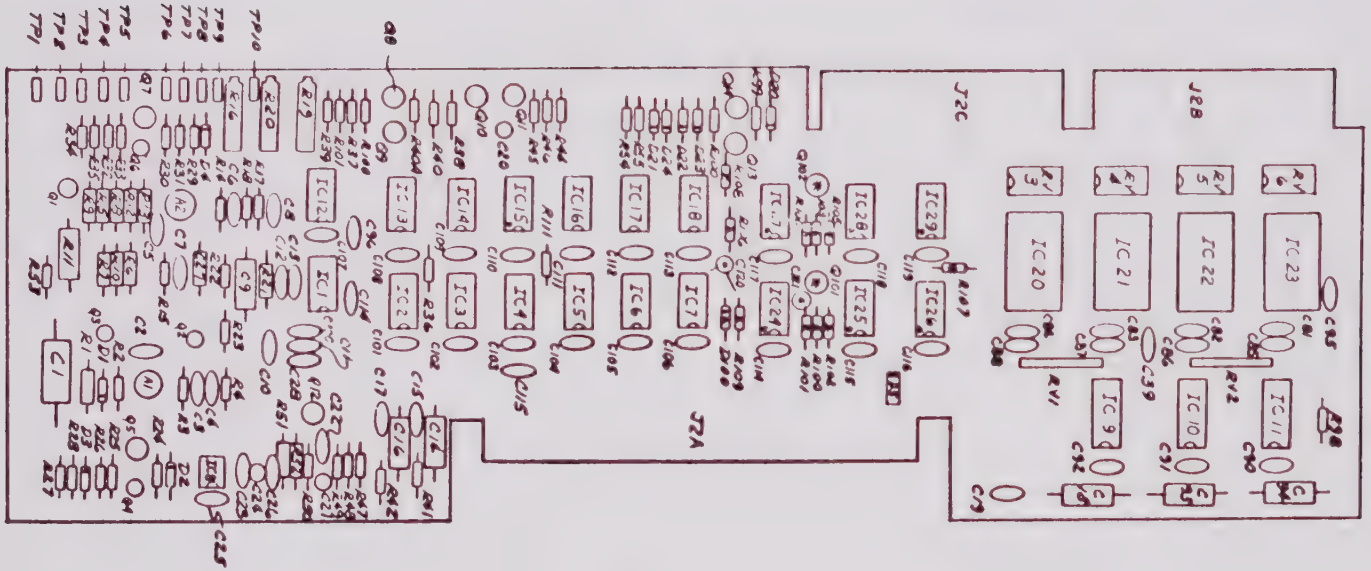


PC BOARD REV. C

* SUPPLIED FOR OPTION 'P' ONLY

| | | |
|---|---|---|
| SCALE | APPROVED BY SES | DRAWN BY J.C. |
| DATE 11/10/76 | COMPONENT LOCATION | |
| | VOLTAGE ASSEMBLY | |
| KeyTek INSTRUMENT CORP. | | DRAWING NUMBER 12-115-000D |

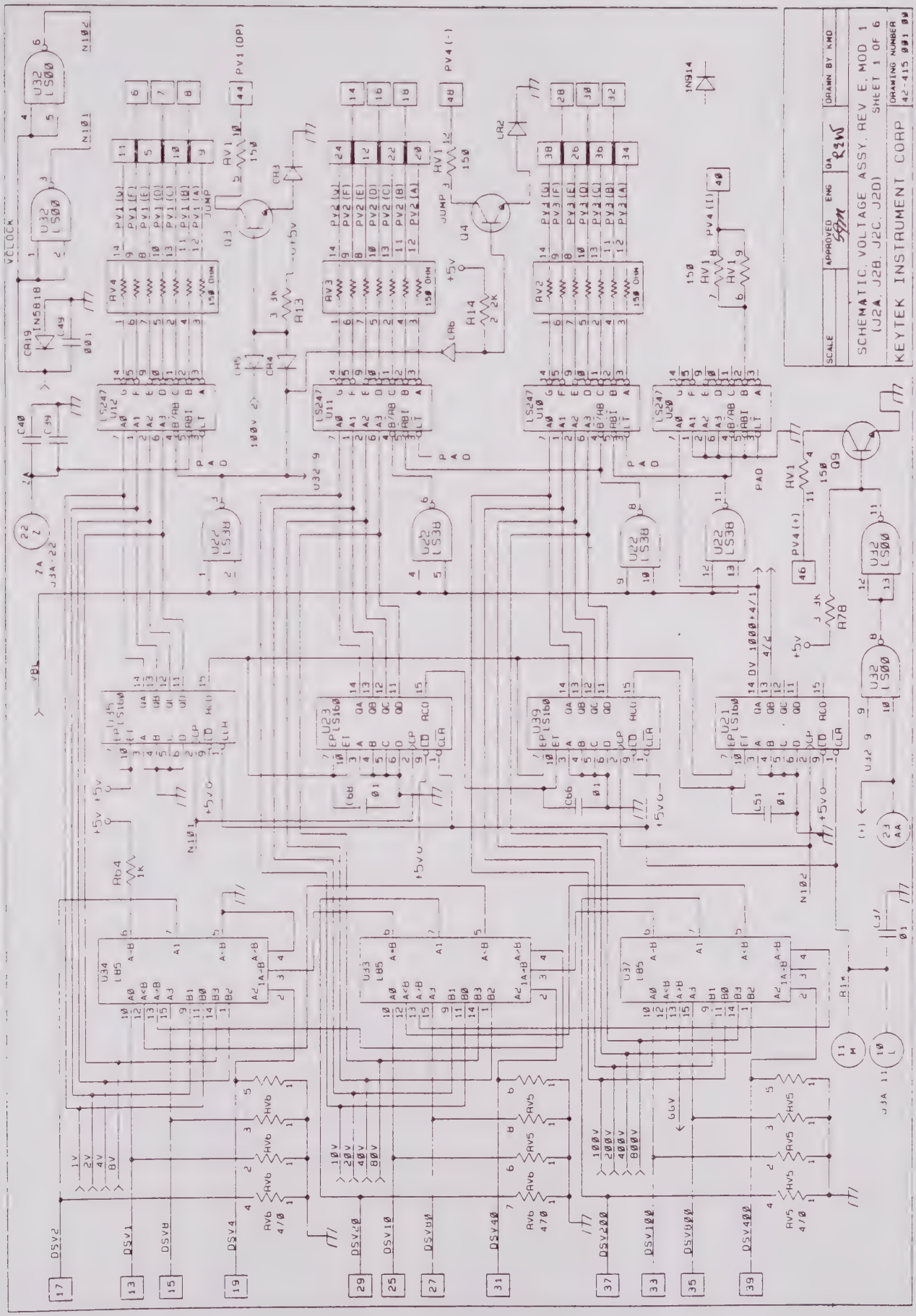
SCHEMATIC, VOLTAGE ASSY, REV E, MOD 1
(J2A, J2B, J2C, J2D)
SHEET 1 OF 6
KEYTEK INSTRUMENT CORP
DRAWING NUMBER
42-415 001 00
SCALE
APPROVED
ENG
QA
DRAWN BY KMD

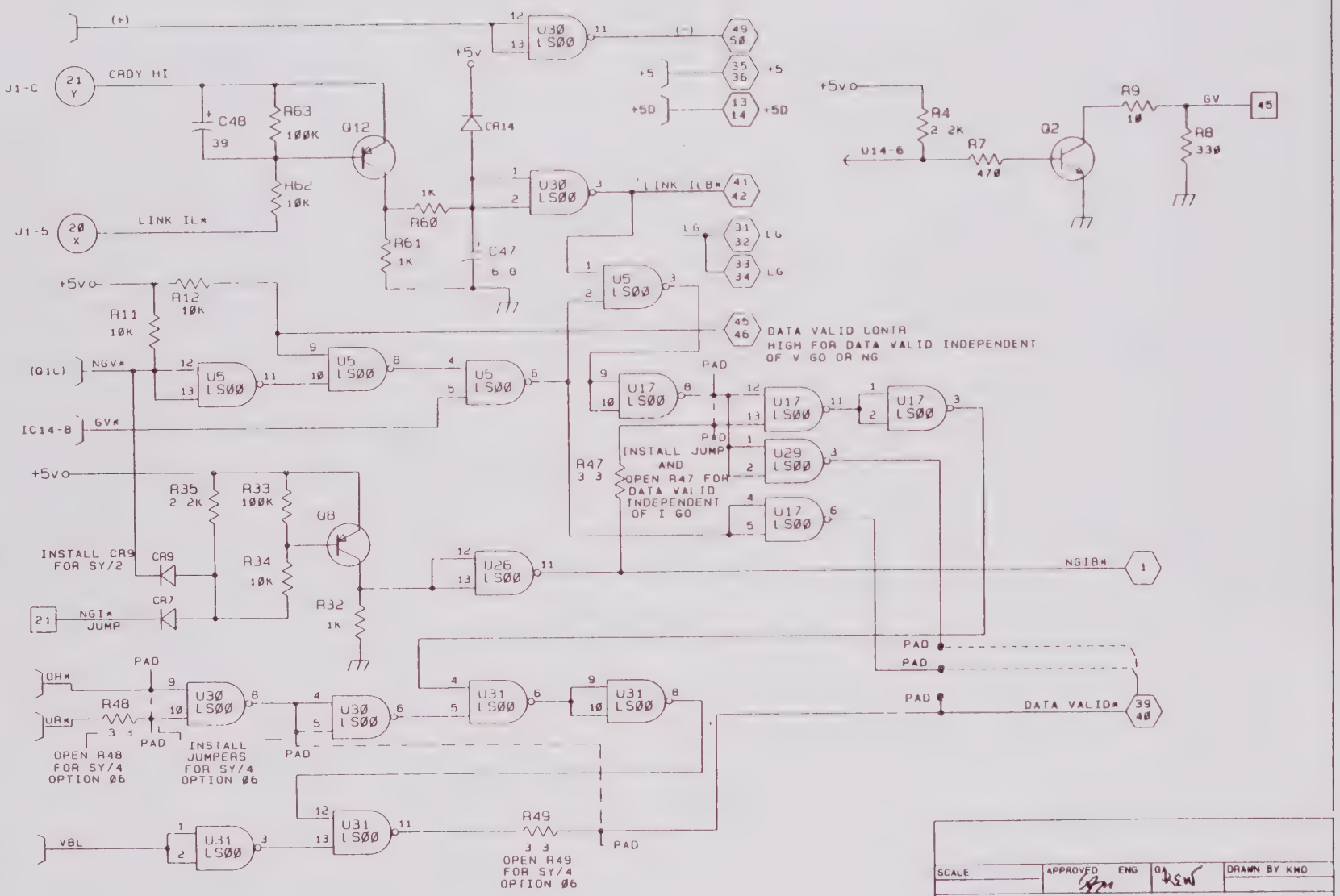


| | | | |
|---|---|---|---|
| SCALE | APPROVED ENG | QA | DRAWN BY KMD |
| SCHEMATIC, VOLTAGE ASSY, REV E, MOD 1 (J2A, J2B, J2C, J2D) | | | SHEET 2 OF 6 |
| KEYTEK INSTRUMENT CORP | | | DRAWING NUMBER 42-415-001-00 |

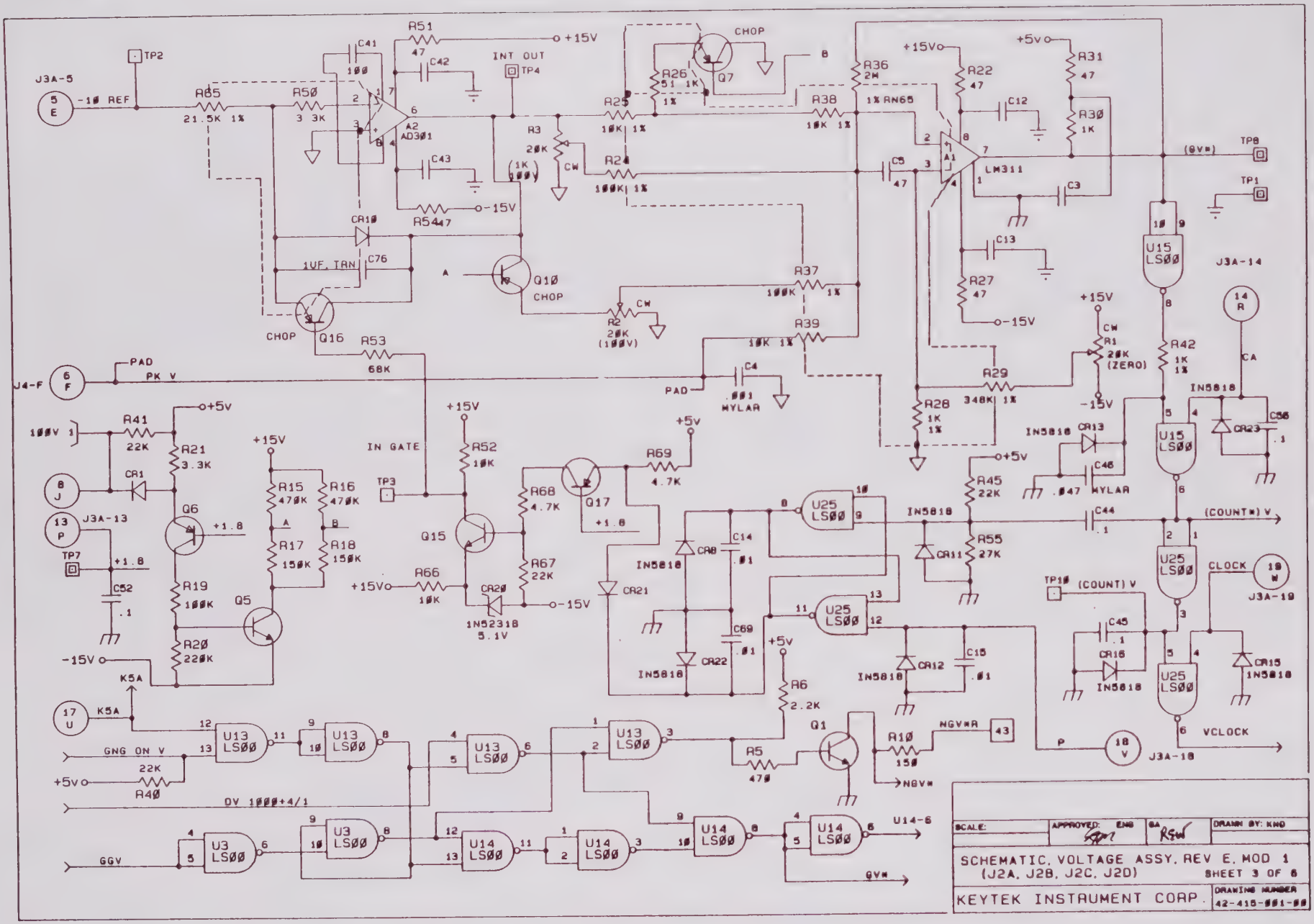
J3A-5
-10 REF
TP2
R65
21.5K 1%
R50
3 3K
C41
100
R51
47
C42
+15V
INT OUT
TP4
A2
AD301
C43
R54
47
-15V
CR10
1UF, TRN
C76
Q16
CHOP
Q10
CHOP
R3
20K
CW
R25
10K 1%
R26
51 1K
1%
Q7
CHOP
R24
100K 1%
R38
10K 1%
R36
2M
1% RN65
+15V
R22
47
C12
+5v
R31
47
R30
1K
A1
LM311
C5
47
C3
C13
R27
47
-15V
TP8
(GV*)
TP1
U15
LS00
J3A-14
R37
100K 1%
R2
20K
(100V)
CW
R39
10K 1%
R53
68K
J4-F
PAD
PK V
PAD
C4
.001
MYLAR
R29
348K 1%
R28
1K
1%
+15V
CW
R1
20K
(ZERO)
-15V
R42
1K
1%
14
R
CA
IN5818
CR23
C56
.1
IN5818
CR13
C46
.047
MYLAR
100V
R41
22K
+5v
R21
3.3K
CR1
8
J
13
P
J3A-13
TP7
+1.8
C52
.1
Q6
+1.8
R19
100K
R20
220K
Q5
-15V
K5A
+15V
R15
470K
R16
470K
R17
150K
R18
150K
IN GATE
TP3
+15V
R52
10K
Q15
R66
10K
+15V
CR20
1N5231B
5.1V
-15V
R68
4.7K
R67
22K
Q17
+1.8
R69
4.7K
+5v
CR21
CR8
IN5818
C14
.01
C69
.01
CR22
IN5818
U25
LS00
+5v
R6
2.2K
R45
22K
R55
27K
CR11
IN5818
C44
.1
(COUNT*) V
U25
LS00
CLOCK
19
W
J3A-19
TP10
(COUNT) V
C45
.1
CR16
IN5818
CR15
1N5818
CR12
IN5818
C15
.01
VCLOCK
P
18
V
J3A-18
17
U
K5A
GNG ON V
22K
R40
+5v
DV 1000+4/1
GGV
U13
LS00
U3
LS00
U14
LS00
Q1
R5
470
R10
150
NGV*R
43
NGV*
U14-6
GV*
SCALE:
APPROVED: ENG
QA
DRAWN BY: KHO
SCHEMATIC, VOLTAGE ASSY, REV E, MOD 1
(J2A, J2B, J2C, J2D)
SHEET 3 OF 6
KEYTEK INSTRUMENT CORP.
DRAWING NUMBER
42-415-001-00

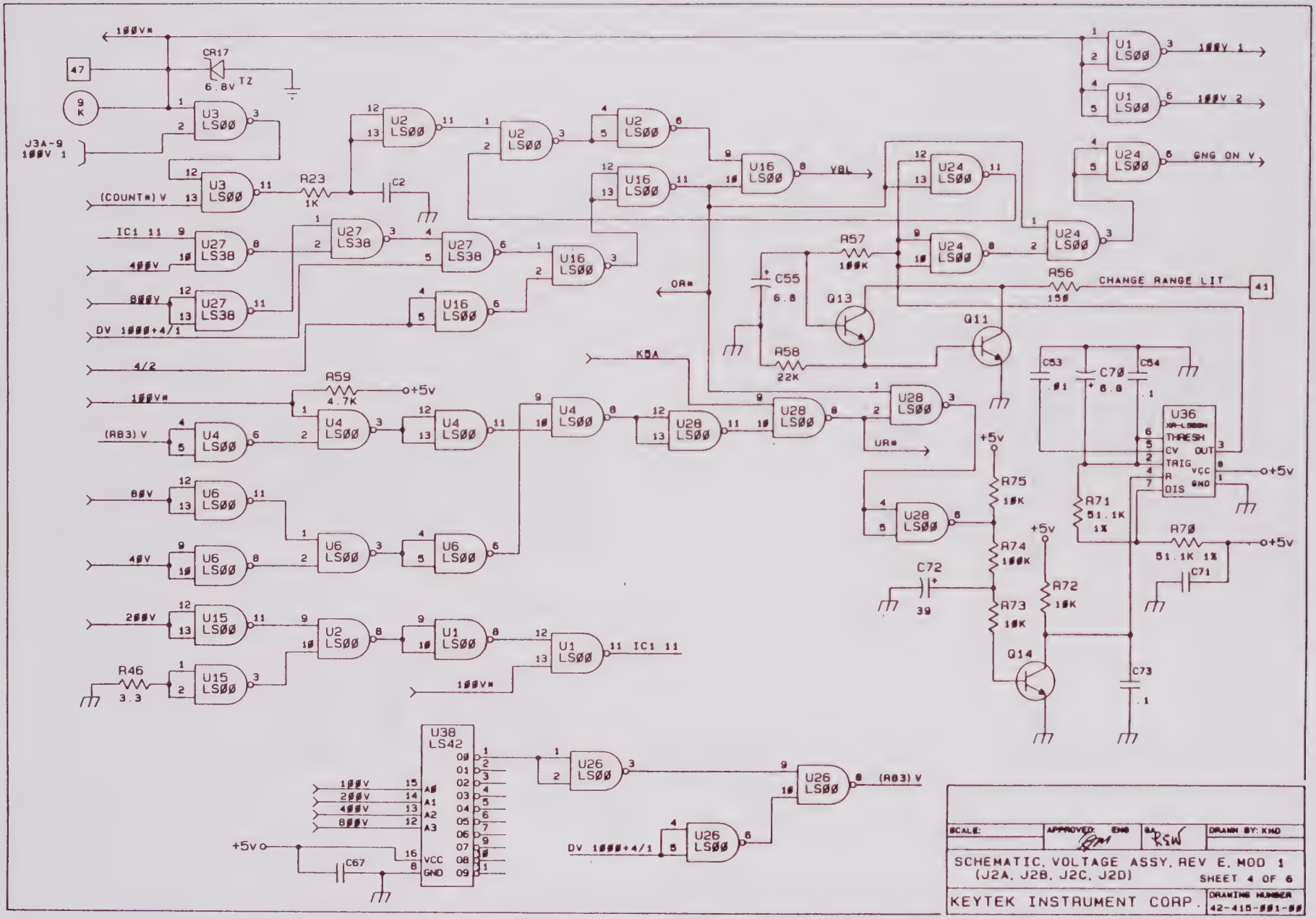


| | | | |
|---|---|---|---|
| SCALE: | APPROVED: ENG | BY: RSW | DRAWN BY: KMD |
| SCHEMATIC, VOLTAGE ASSY, REV E, MOD 1 (J2A, J2B, J2C, J2D) | | | SHEET 4 OF 6 |
| KEYTEK INSTRUMENT CORP. | | | DRAWING NUMBER 42-415-001-00 |

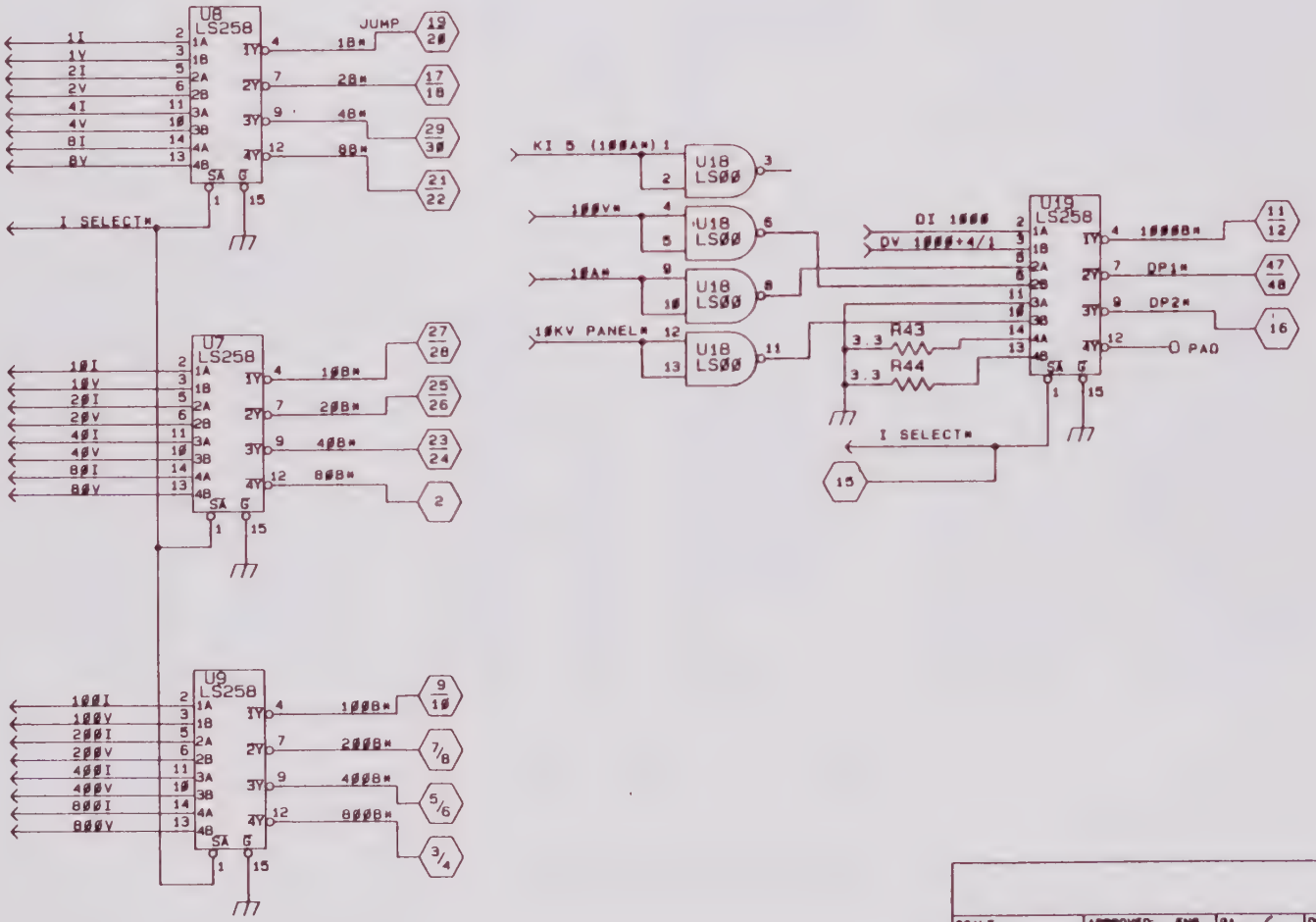


| | | | |
|---|---|---|---|
| SCALE: | APPROVED: ENG | QA RSW | DRAWN BY: KMD |
| SCHEMATIC, VOLTAGE ASSY, REV E, MOD 1 (J2A, J2B, J2C, J2D) | | | SHEET 5 OF 6 |
| KEYTEK INSTRUMENT CORP. | | | DRAWING NUMBER 42-415-001-00 |

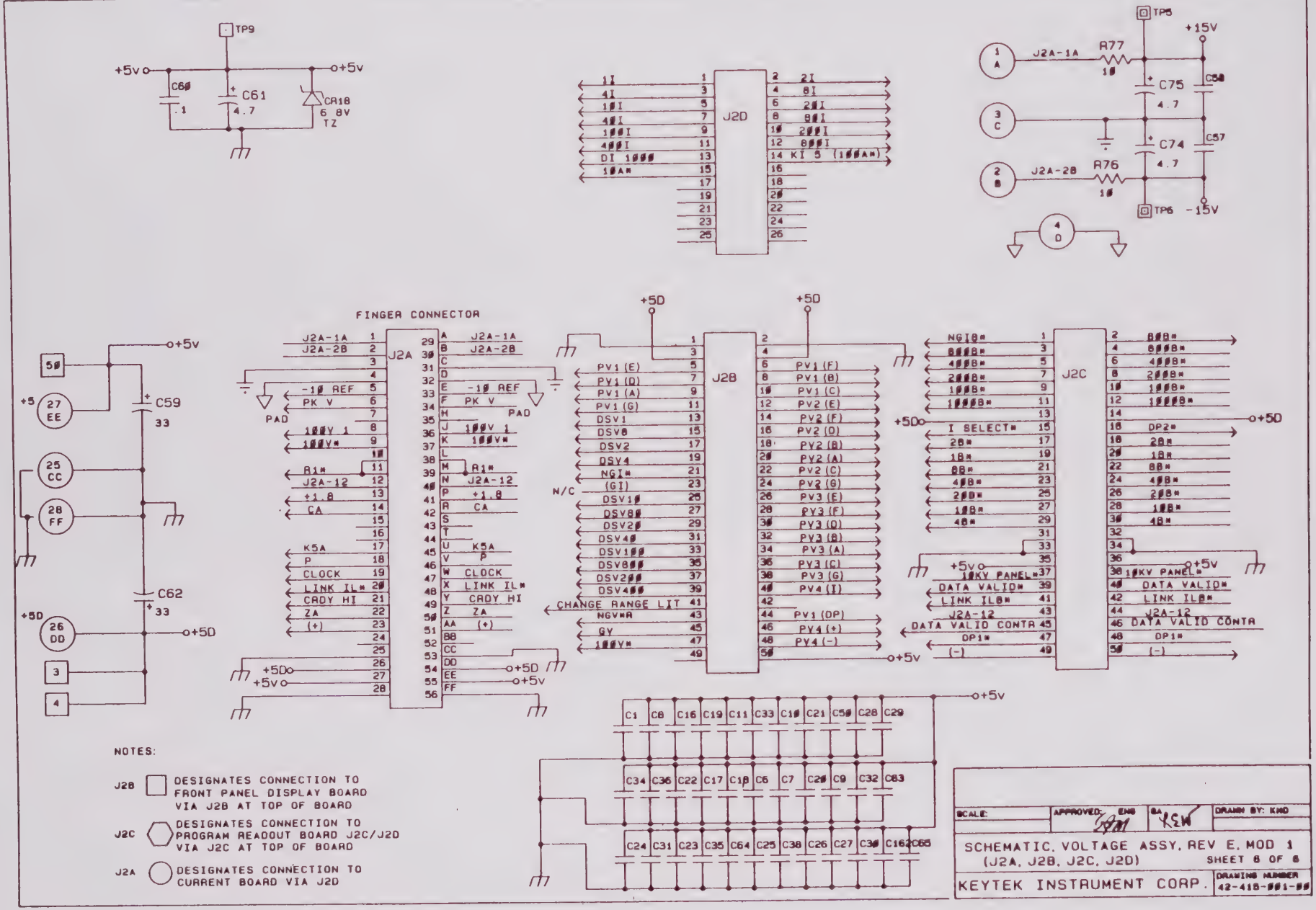


NOTES:

J2B ☐ DESIGNATES CONNECTION TO FRONT PANEL DISPLAY BOARD VIA J2B AT TOP OF BOARD

J2C ⬡ DESIGNATES CONNECTION TO PROGRAM READOUT BOARD J2C/J2D VIA J2C AT TOP OF BOARD

J2A ○ DESIGNATES CONNECTION TO CURRENT BOARD VIA J2D

| | | | |
|---|---|---|---|
| SCALE: | APPROVED: ENG | QA | DRAWN BY: KMD |
| SCHEMATIC, VOLTAGE ASSY, REV E, MOD 1 (J2A, J2B, J2C, J2D) | | | SHEET 8 OF 8 |
| KEYTEK INSTRUMENT CORP. | | | DRAWING NUMBER 42-418-001-00 |

This page left blank intentionally.

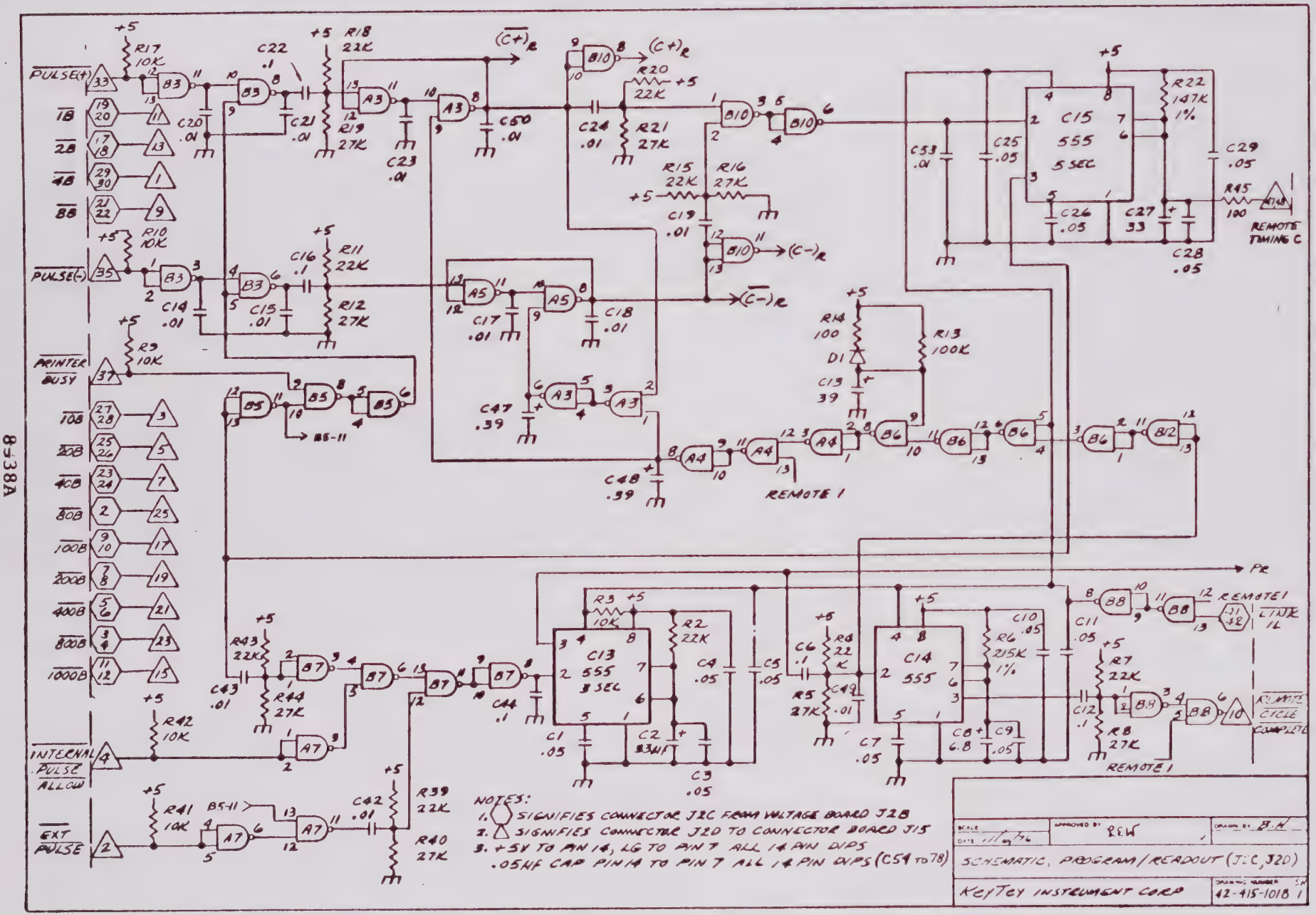
PULSE(+)
1B
2B
4B
8B
PULSE(-)
PRINTER BUSY
10B
20B
40B
80B
100B
200B
400B
800B
1000B
INTERNAL PULSE ALLOW
EXT PULSE
R17 10K
R18 22K
R19 27K
R20 22K
R21 27K
R15 22K
R16 27K
R10 10K
R11 22K
R12 27K
R9 10K
R42 10K
R41 10K
R43 22K
R44 27K
R39 22K
R40 27K
C22 .1
C21 .01
C20 .01
C23 .01
C60 .01
C24 .01
C19 .01
C16 .1
C15 .01
C14 .01
C17 .01
C18 .01
C47 .39
C48 .39
C43 .01
C44 .1
C42 .01
C33 .01
C25 .05
C26 .05
C27 33
C28 .05
C29 .05
R22 147K 1%
R45 100
C15 555 5 SEC
REMOTE TIMING C
R14 100
D1
R13 100K
C13 39
REMOTE 1
R3 10K
R2 22K
C13 555 3 SEC
C1 .05
C2 33
C3 .05
C4 .05
C5 .05
C6 .1
R4 22K
R5 27K
C49 .01
C14 555
R6 215K 1%
C7 .05
C8 6.8
C9 .05
C10 .05
C11 .05
R7 22K
R8 27K
C12 .1
REMOTE 1
REMOTE CYCLE COMPLETE
B5-11
B6-11
NOTES:
1. ⬡ SIGNIFIES CONNECTOR J2C FROM VOLTAGE BOARD J2B
2. △ SIGNIFIES CONNECTOR J2D TO CONNECTOR BOARD J1S
3. +5V TO PIN 14, LG TO PIN 7 ALL 14 PIN DIPS
.05MF CAP PIN 14 TO PIN 7 ALL 14 PIN DIPS (C54 TO 78)
SCHEMATIC, PROGRAM/READOUT (J2C, J2D)
KEITHLEY INSTRUMENT CORP
42-415-1018 1

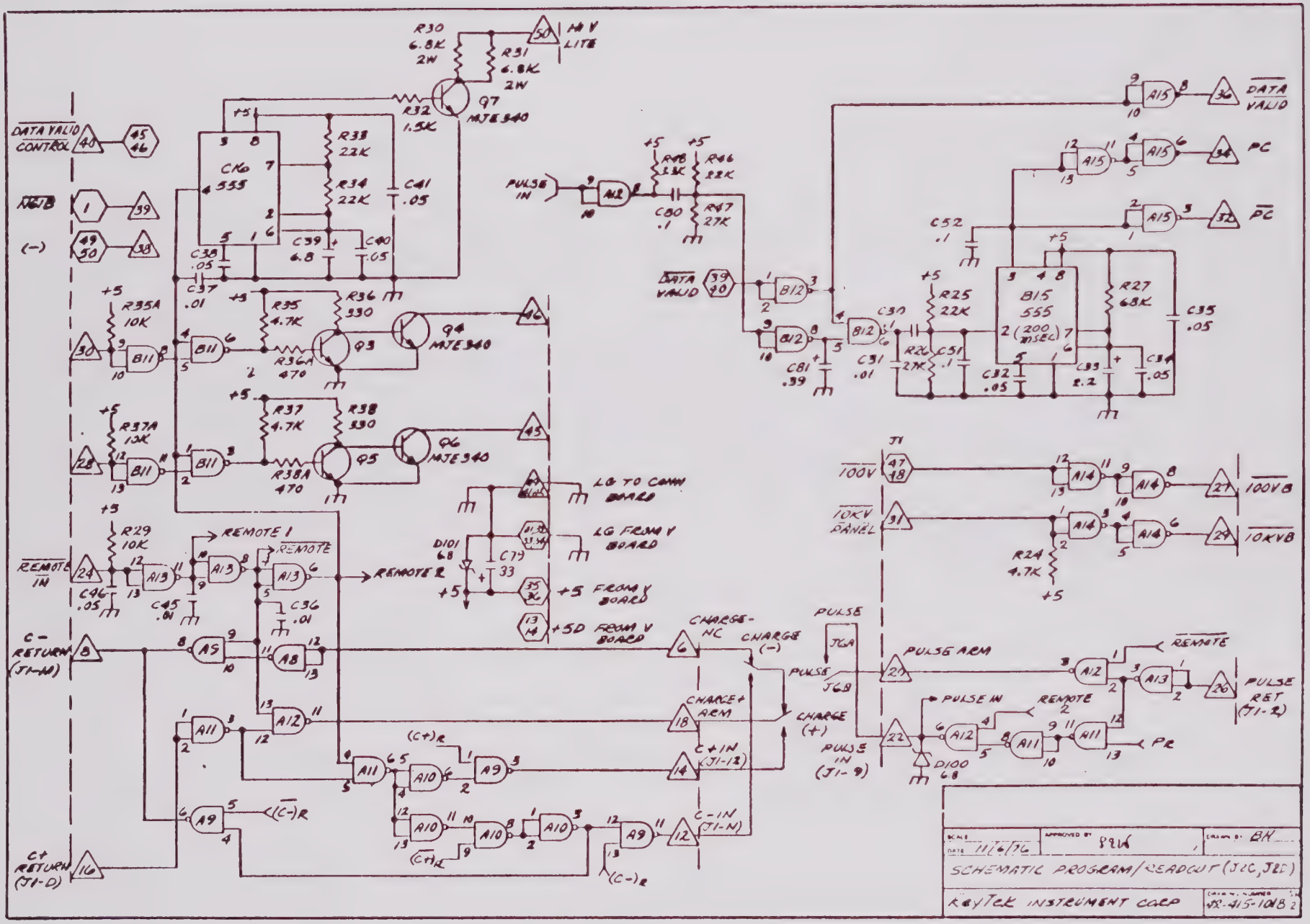
DATA VALID CONTROL
NGIB
(-)
REMOTE IN
C- RETURN (J1-M)
C+ RETURN (J1-D)
HI V LITE
PULSE IN
DATA VALID
PC
PC
LG TO CONN BOARD
LG FROM V BOARD
+5 FROM V BOARD
+5D FROM V BOARD
REMOTE 1
REMOTE
REMOTE 2
CHARGE- NC
CHARGE (-)
CHARGE+ ARM
CHARGE (+)
C+IN (J1-12)
C-IN (J1-N)
PULSE
PULSE ARM
PULSE IN (J1-9)
PULSE RET (J1-2)
100V
10KV PANEL
100VB
10KVB
PR
SCHEMATIC PROGRAM/READOUT (J2C, J2D)
KEYTEK INSTRUMENT CORP
DATE 11/6/76
DRAWN BY BH

REDUCE AREA WITHIN BLUE RECTANGLE TO 8½ × 11 (TO SCALE)

| CONN J17 | SIGNAL NAME | INPUTS RA | INPUTS CA | OUTPUTS RB | OUTPUTS CB | CONN J15 |
|---|---|---|---|---|---|---|
| A1 | $\overline{\text{EXT PULSE}}$ | R1 | C1 | — | — | 2 |
| A2 | $\overline{\text{PULSE ALLOW}}$ | R2 | C2 | | | 4 |
| A3 | $\overline{20B}$ | | | R3 | C3 | 5 |
| A4 | $\overline{8B}$ | | | R4 | C4 | 9 |
| A5 | $\overline{1B}$ | | | R5 | C5 | 11 |
| A6 | $\overline{1000B}$ | | | R6 | C6 | 15 |
| A7 | $\overline{200B}$ | | | R7 | C7 | 19 |
| A8 | $\overline{800B}$ | | | R8 | C8 | 23 |
| A9 | $\overline{80B}$ | | | R9 | C9 | 25 |
| A10 | $\overline{\text{}}$ SELECT | R10 | C10 | | | 28 |
| A11 | | | | | | 30 |
| A12 | $\overline{\text{PULSE +}}$ | R12 | C12 | | | 33 |
| A13 | $\overline{\text{PULSE −}}$ | R13 | C13 | | | 35 |
| A14 | (−) | | | R14 | C14 | 38 |
| A15 | $\overline{\text{DATA VALID CONT}}$ | R15 | C15 | | | 40 |
| A16 | SPARE | | | | | — |
| A17 | CHASSIS, LG | | | | | 41,42,49 |
| | | | | | | |
| | | | | | | |
| B1 | $\overline{4B}$ | | | R16 | C16 | 1 |
| B2 | $\overline{10B}$ | | | R17 | C17 | 3 |
| B3 | $\overline{40B}$ | | | R18 | C18 | 7 |
| B4 | $\overline{\text{REMOTE CYC COMP}}$ | | | R19 | C19 | 10 |
| B5 | $\overline{2B}$ | | | R20 | C20 | 13 |
| B6 | $\overline{100B}$ | | | R21 | C21 | 17 |
| B7 | $\overline{400B}$ | | | R22 | C22 | 21 |
| B8 | $\overline{\text{REMOTE IN}}$ | R23 | C23 | | | 24 |
| B9 | $\overline{\text{DP1B}}$ | | | R24 | C24 | 27 |
| B10 | $\overline{\text{DP2B}}$ | | | R25 | C25 | 29 |
| B11 | $\overline{\text{FC}}$ | | | R26 | C26 | 32 |
| B12 | FC | | | R27 | C27 | 34 |
| B13 | $\overline{\text{DATA VALID}}$ | | | R28 | C28 | 36 |
| B14 | $\overline{\text{PRINTER BUSY}}$ | R29 | C29 | | | 37 |
| B15 | SPARE NOT B | | | — | — | 39 |
| B16 | SPARE | | | | | — |
| B17 | CHASSIS, LG | | | | | 41,42,49 |

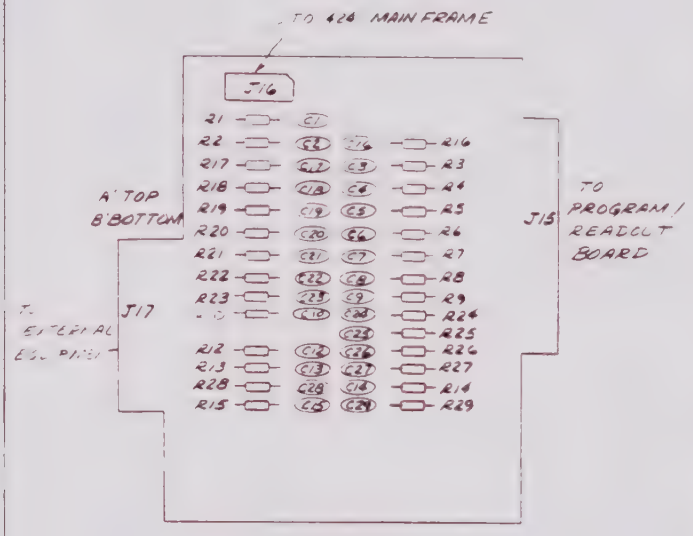


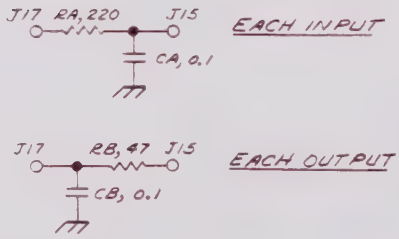


| J16 | | J15 |
|---|---|---|
| 1 | C− IN | 12 |
| 2 | C+ IN | 14 |
| 3 | C+ RET | 16 |
| 4 | C+ ARM | 18 |
| 5 | LG | 41,42,49 |
| 6 | +5 | — |
| 7 | C− RET | 8 |
| 8 | C− NC | 6 |
| 9 | HI V LITE | 50 |
| 10 | | 46 |
| 11 | | 45 |
| 12 | C DLY | 47,48 |
| 13 | TORY PANEL | 31 |
| 14 | PULSE RET | 26 |
| 15 | PULSE NO | 22 |
| 16 | PULSE ARM | 20 |

LG = LOGIC GND.

| | | | |
|---|---|---|---|
| SCALE | APPROVED BY: JTM | DA | DRAWN BY: |
| DATE 11/22/76 | | | |
| SCHEMATIC / LOCATION CONNECTOR BOARD | | | |
| KeyTek INSTRUMENT CORP. | | | DRAWING NUMBER 42-423-500C |

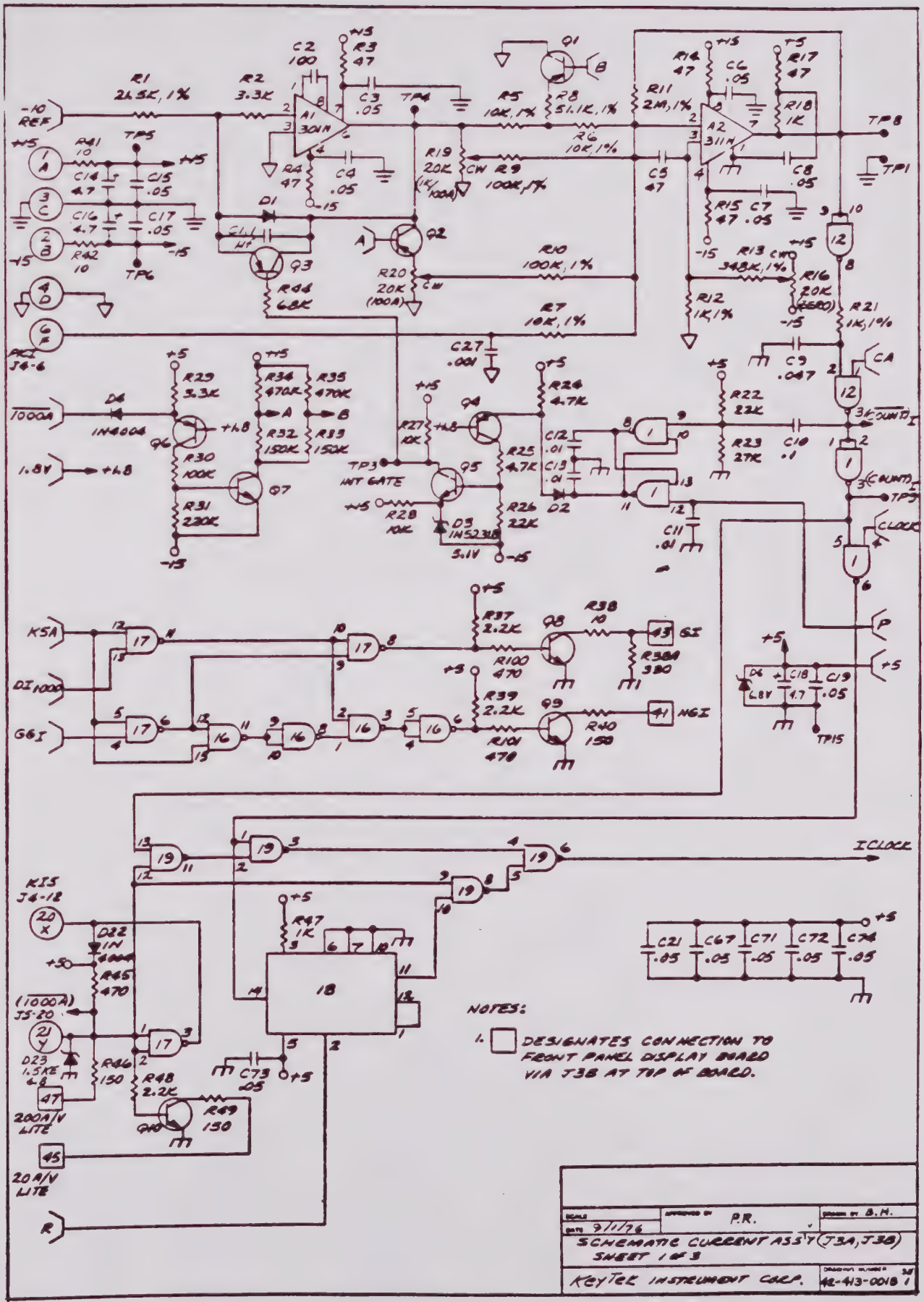
NOTES:
1. DESIGNATES CONNECTION TO FRONT PANEL DISPLAY BOARD VIA J3B AT TOP OF BOARD.
SCHEMATIC CURRENT ASS'Y (J3A, J3B)
SHEET 1 OF 3
KEYTEK INSTRUMENT CORP.
42-413-0018
P.R.
B.H.
9/1/76
-10 REF
1000A
1.8V
KS1 J4-12
(1000A) J5-20
200A/V LITE
20A/V LITE
ICLOCK
CLOCK
(COUNT)
TP1
TP3 INT GATE
TP4
TP5
TP6
TP8
TP15
GI
NGI
GGI
KSA
DI1000
PKI J4-6

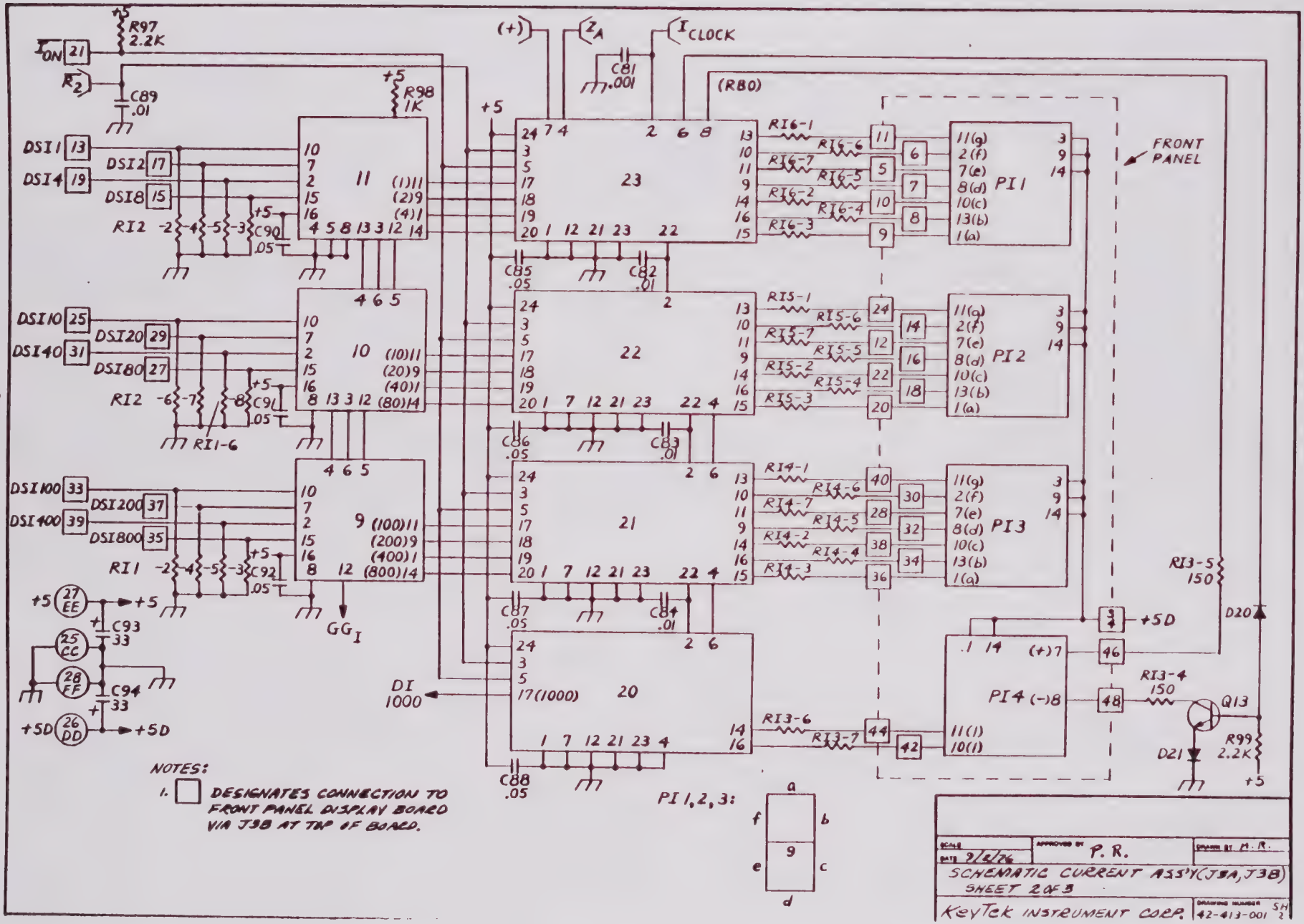
R97 2.2K
R98 1K
C89 .01
C90 .05
C91 .05
C92 .05
C93 33
C94 33
C81 .001
C82 .01
C83 .01
C84 .01
C85 .05
C86 .05
C87 .05
C88 .05
RI2
RI1-6
RI1
DSI1
DSI2
DSI4
DSI8
DSI10
DSI20
DSI40
DSI80
DSI100
DSI200
DSI400
DSI800
RI6-1
RI6-6
RI6-7
RI6-5
RI6-2
RI6-4
RI6-3
RI5-1
RI5-6
RI5-7
RI5-5
RI5-2
RI5-4
RI5-3
RI4-1
RI4-6
RI4-7
RI4-5
RI4-2
RI4-4
RI4-3
RI3-6
RI3-7
RI3-5 150
RI3-4 150
PI1
PI2
PI3
PI4
PI 1,2,3:
FRONT PANEL
+5D
D20
D21
Q13
R99 2.2K
GG I
DI 1000
(RBO)
NOTES:
1. DESIGNATES CONNECTION TO FRONT PANEL DISPLAY BOARD VIA J3B AT TOP OF BOARD.
SCHEMATIC CURRENT ASS'Y (J3A, J3B)
SHEET 2 OF 3
KeyTek INSTRUMENT CORP.
P. R.
2/2/76
42-413-001 SH 2

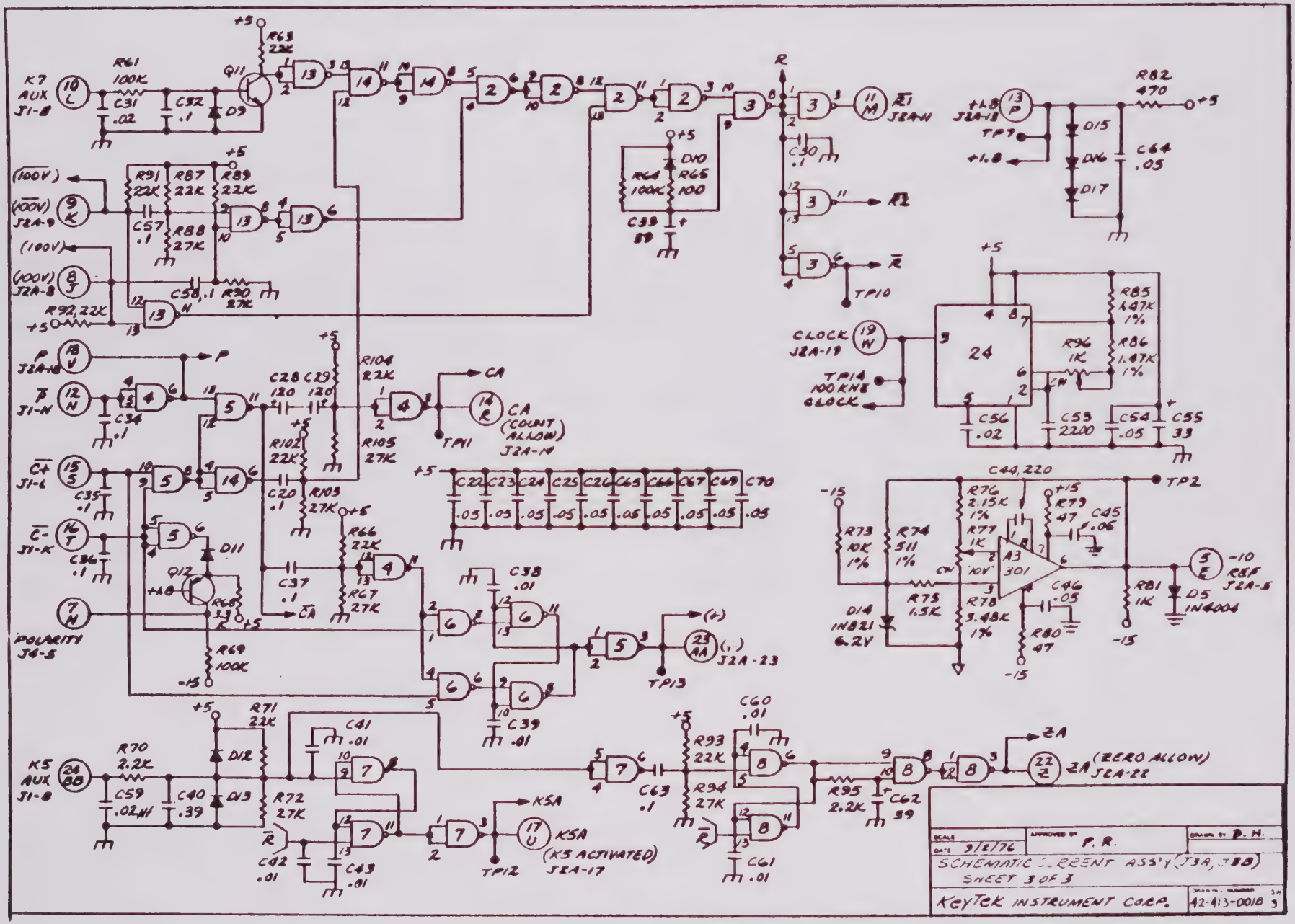
K7 AUX J1-8
K5 AUX J1-8
POLARITY J4-5
CLOCK J2A-19
TP14 100 KHZ CLOCK
CA (COUNT ALLOW) J2A-14
ZA (ZERO ALLOW) J2A-22
K5A (K5 ACTIVATED) J2A-17
J2A-23
J2A-11
J2A-18
J2A-9
J2A-8
J2A-13
J2A-5
TP2
TP7
TP10
TP11
TP12
TP13
SCHEMATIC CURRENT ASS'Y (J3A, J3B)
SHEET 3 OF 3
KeyTek INSTRUMENT CORP.
42-413-0010
P. R.
B. H.
3/2/76

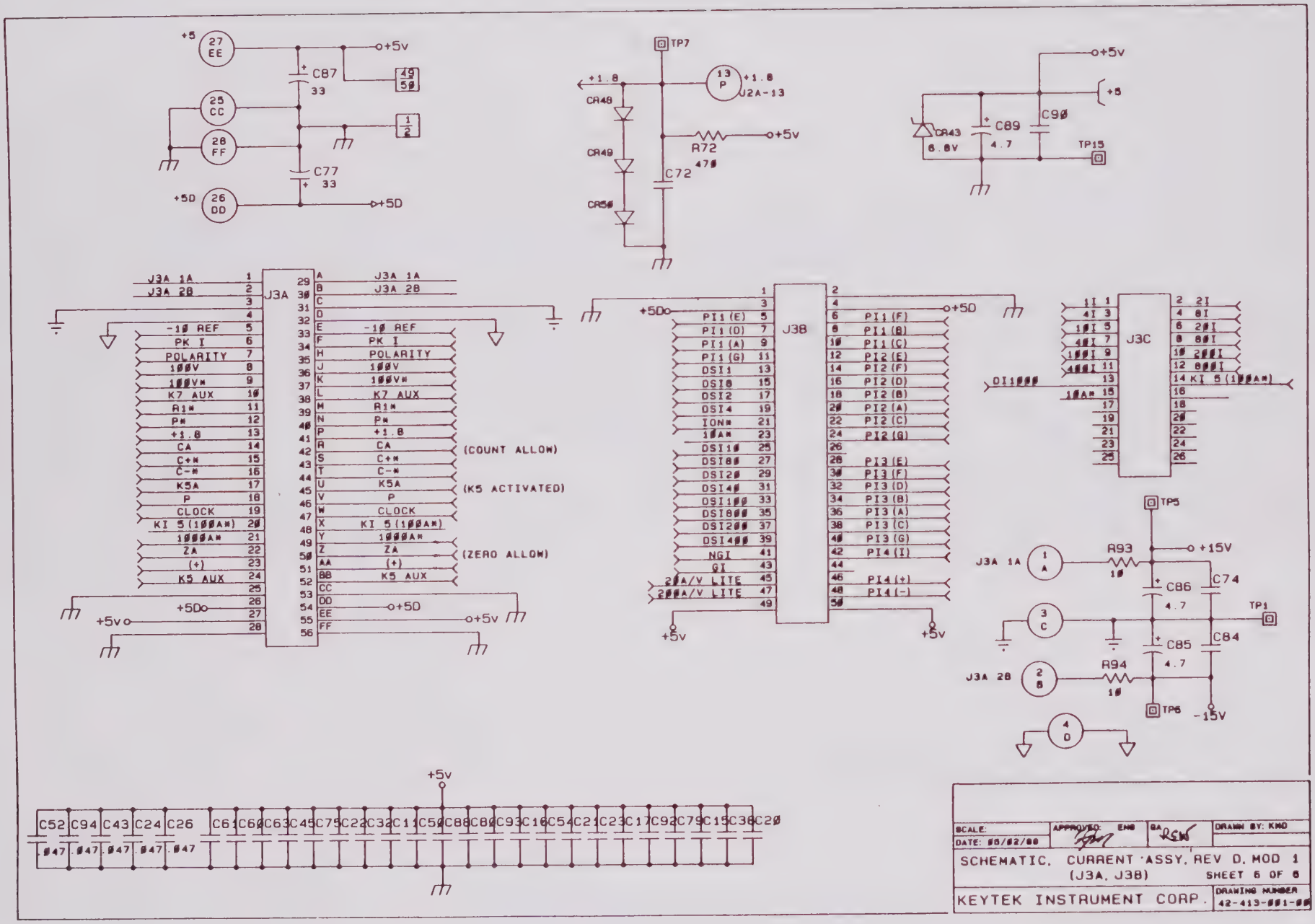


| | | | |
|---|---|---|---|
| SCALE: | APPROVED: ENG | QA | DRAWN BY: KMD |
| DATE: 88/02/08 | | | |

SCHEMATIC, CURRENT ASSY, REV D, MOD 1 (J3A, J3B) SHEET 6 OF 8

KEYTEK INSTRUMENT CORP. DRAWING NUMBER 42-413-001-06

REDUCE AREA WITHIN BLUE RECTANGLE TO 8½×11 (to 66%)

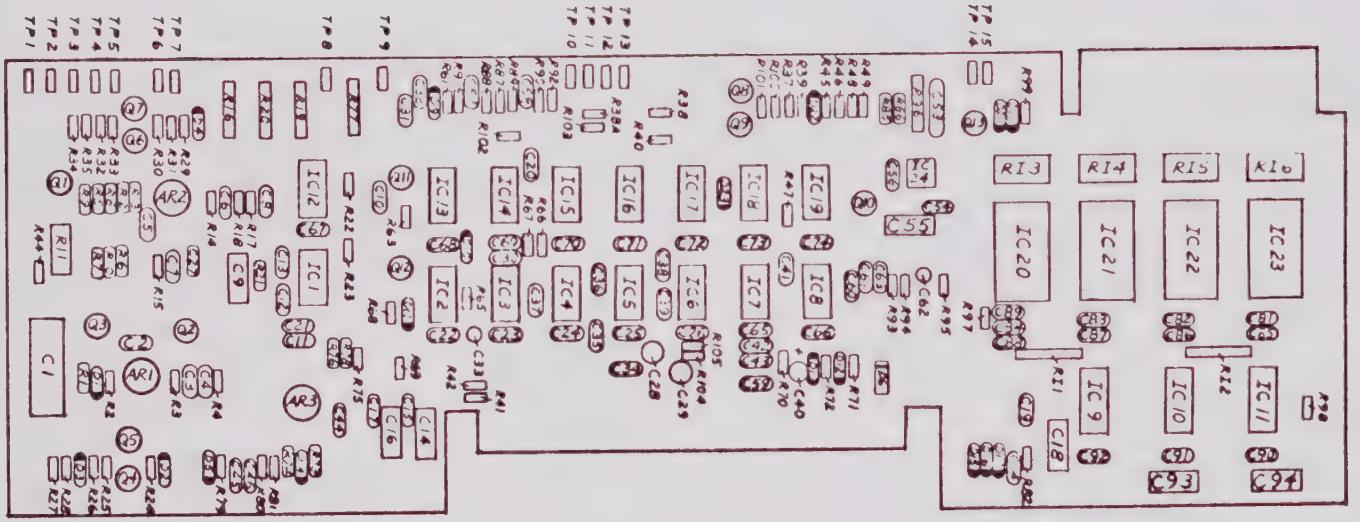


| | | |
|---|---|---|
| SCALE | APPROVED BY P.R. | DRAWN BY M. R. |
| DATE 8/9/76 | | |

COMPONENT LOCATION
CURRENT ASSEMBLY

KeyTek INSTRUMENT CORP. | DRAWING NUMBER 42-413-0008

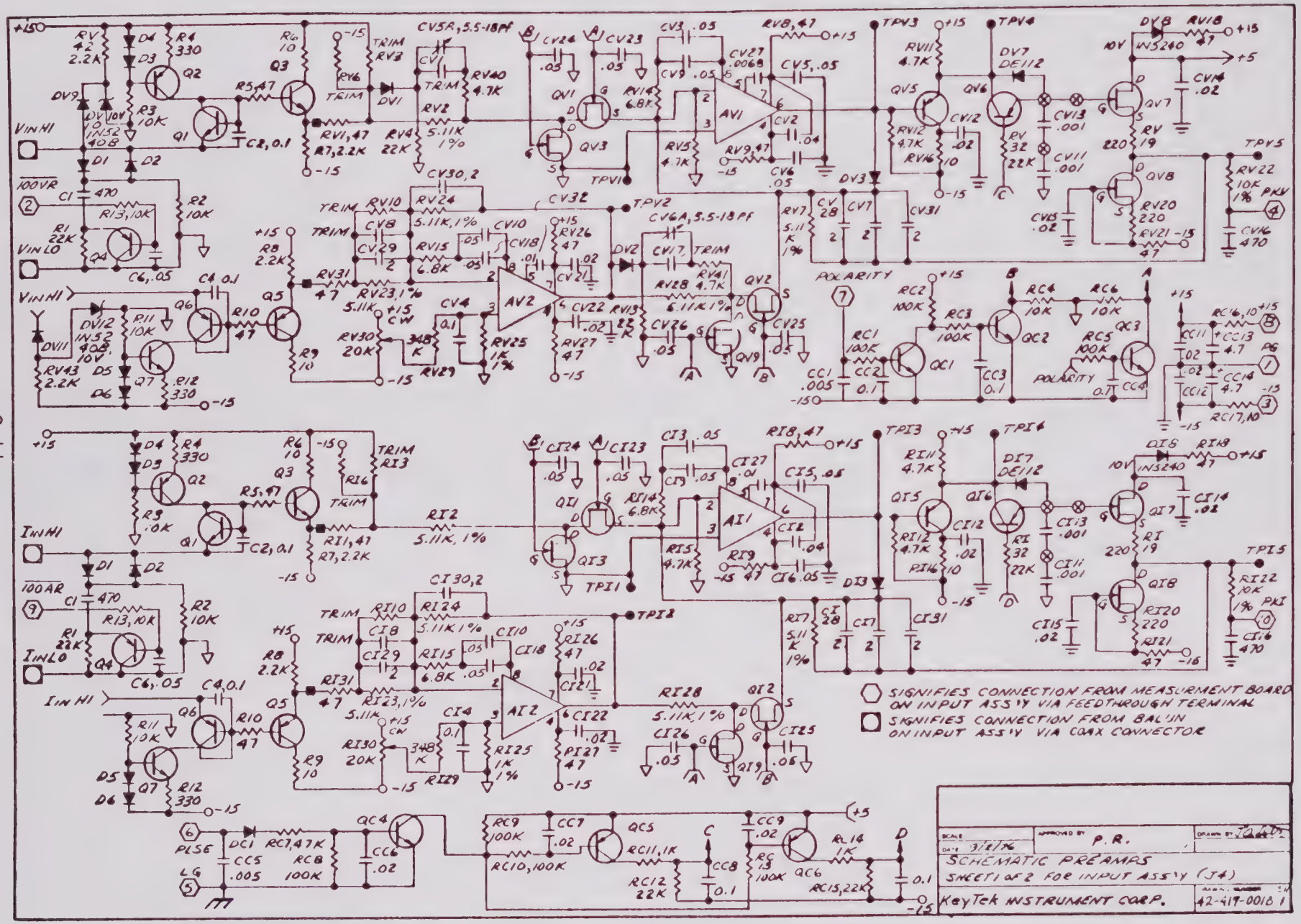
SIGNIFIES CONNECTION FROM MEASURMENT BOARD ON INPUT ASS'Y VIA FEEDTHROUGH TERMINAL
SIGNIFIES CONNECTION FROM BALUN ON INPUT ASS'Y VIA COAX CONNECTOR
SCHEMATIC PREAMPS
SHEET 1 OF 2 FOR INPUT ASS'Y (J4)
KeyTek INSTRUMENT CORP.
42-419-0018 1
P. R.
3/8/76

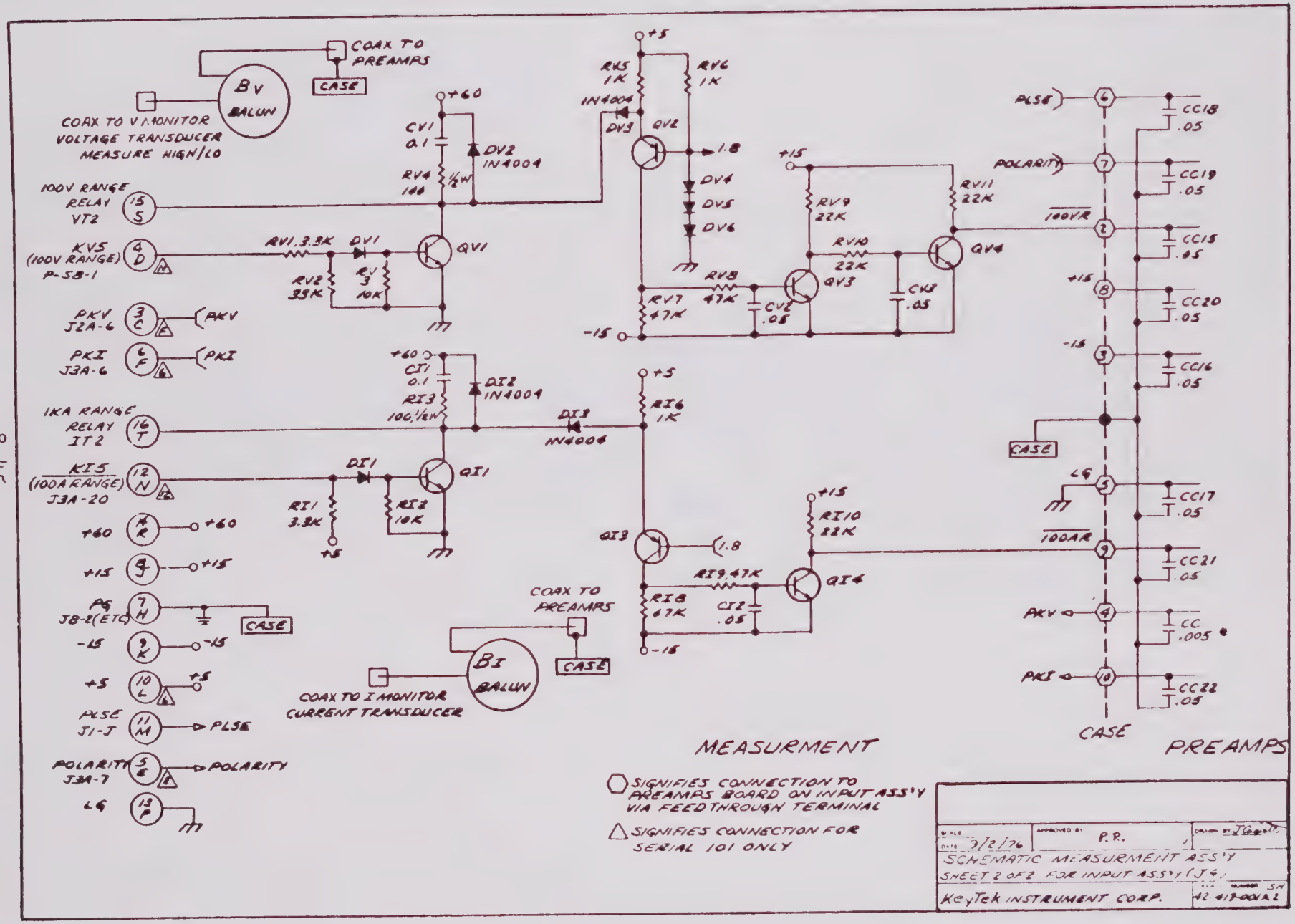
COAX TO PREAMPS
CASE
BV BALUN
COAX TO V MONITOR VOLTAGE TRANSDUCER MEASURE HIGH/LO
100V RANGE RELAY VT2
KVS (100V RANGE) P-58-1
PKV J2A-6
PKI J3A-6
IKA RANGE RELAY IT2
KIS (100A RANGE) J3A-20
+60
+15
PG J8-2(ETC)
-15
+5
PLSE J1-J
POLARITY J3A-7
LG
CV1 0.1
DV2 IN4004
RV4 100
RV1 3.3K
RV2 33K
RV3 10K
QV1
DV3 IN4004
RV5 1K
RV6 1K
QV2
DV4
DV5
DV6
RV7 47K
RV8 47K
CV2 .05
QV3
RV9 22K
RV10 22K
CV3 .05
RV11 22K
QV4
CI1 0.1
DI2 IN4004
RI3 100, 1/2W
DI1
RI1 3.3K
RI2 10K
QI1
DI3 IN4004
RI6 1K
QI3
RI8 47K
RI9 47K
CI2 .05
QI4
RI10 22K
COAX TO PREAMPS
CASE
BI BALUN
COAX TO I MONITOR CURRENT TRANSDUCER
PLSE
POLARITY
100VR
100AR
AKV
PKI
CC18 .05
CC19 .05
CC15 .05
CC20 .05
CC16 .05
CC17 .05
CC21 .05
CC .005 *
CC22 .05
CASE
MEASURMENT
PREAMPS
SIGNIFIES CONNECTION TO PREAMPS BOARD ON INPUT ASS'Y VIA FEEDTHROUGH TERMINAL
SIGNIFIES CONNECTION FOR SERIAL 101 ONLY
APPROVED BY P.R.
DRAWN BY J.G.
DATE 3/2/76
SCHEMATIC MEASURMENT ASS'Y
SHEET 2 OF 2 FOR INPUT ASS'Y (J4)
KeyTek INSTRUMENT CORP.
42-417-0001A2

REDUCE AREA WITHIN BLUE RECTANGLE TO 8½ x 11 (to 66 %)

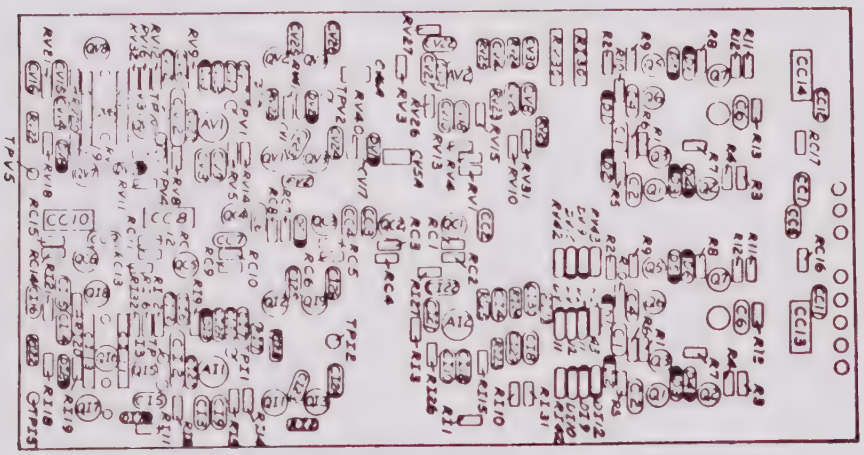

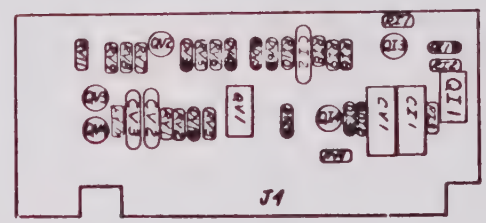


| | | |
|---|---|---|
| SCALE | APPROVED BY LEW | DRAWN BY M.R. |
| DATE 8/9/76 | | |
| COMPONENT LOCATION INPUT ASSEMBLY (J4) | | |
| KeyTek INSTRUMENT CORP. | | DRAWING NUMBER 42-417-000A |

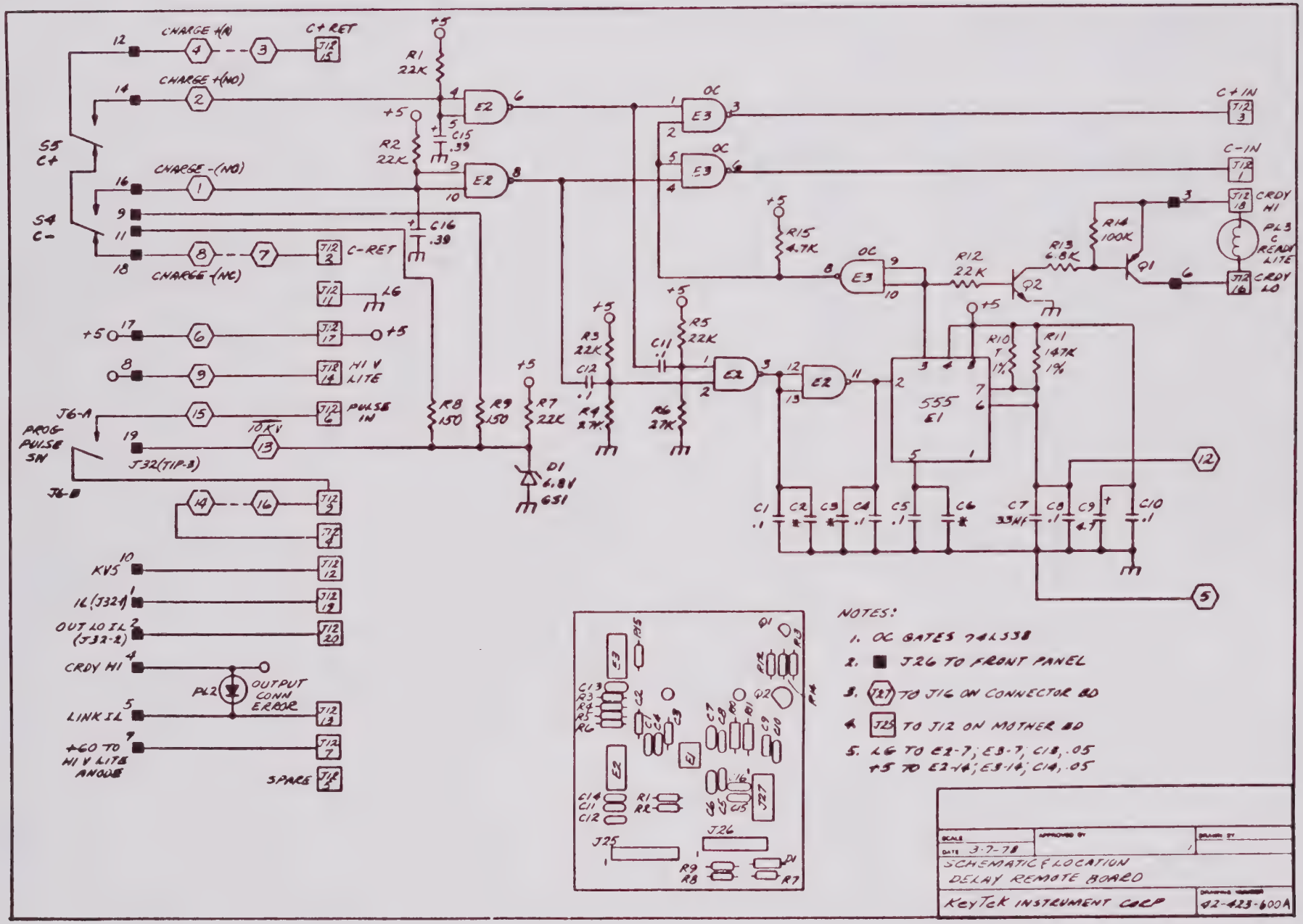
CHARGE +(A)
C+ RET
CHARGE +(NO)
CHARGE -(NO)
CHARGE -(NC)
C-RET
S5 C+
S4 C-
LG
HI V LITE
PULSE IN
J6-A
PROG PULSE SW
J32(TIP-3)
J6-B
KV5
IL (J32-1)
OUT LO IL (J32-2)
CRDY HI
LINK IL
+60 TO HI V LITE ANODE
PL2
OUTPUT CONN ERROR
SPARE
R1 22K
R2 22K
C15 .39
C16 .39
R8 150
R9 150
R7 22K
D1 6.8V GS1
R3 22K
C12 .1
R4 27K
C11 .1
R5 22K
R6 27K
R15 4.7K
R12 22K
R13 6.8K
R14 100K
Q1
Q2
C+ IN
C-IN
CRDY HI
PL3 C READY LITE
CRDY LO
555 E1
R10 1%
R11 147K 1%
C1 .1
C2
C3
C4 .1
C5 .1
C6
C7 33MF
C8 .1
C9 4.7
C10 .1
NOTES:
1. OC GATES 74LS38
2. ■ J26 TO FRONT PANEL
3. J27 TO J16 ON CONNECTOR BD
4. J25 TO J12 ON MOTHER BD
5. LG TO E2-7; E3-7; C13, .05
+5 TO E2-14; E3-14; C14, .05
SCALE
DATE 3-7-78
APPROVED BY
DRAWN BY
SCHEMATIC & LOCATION
DELAY REMOTE BOARD
KeyTek INSTRUMENT CORP
DRAWING NUMBER
42-423-600A

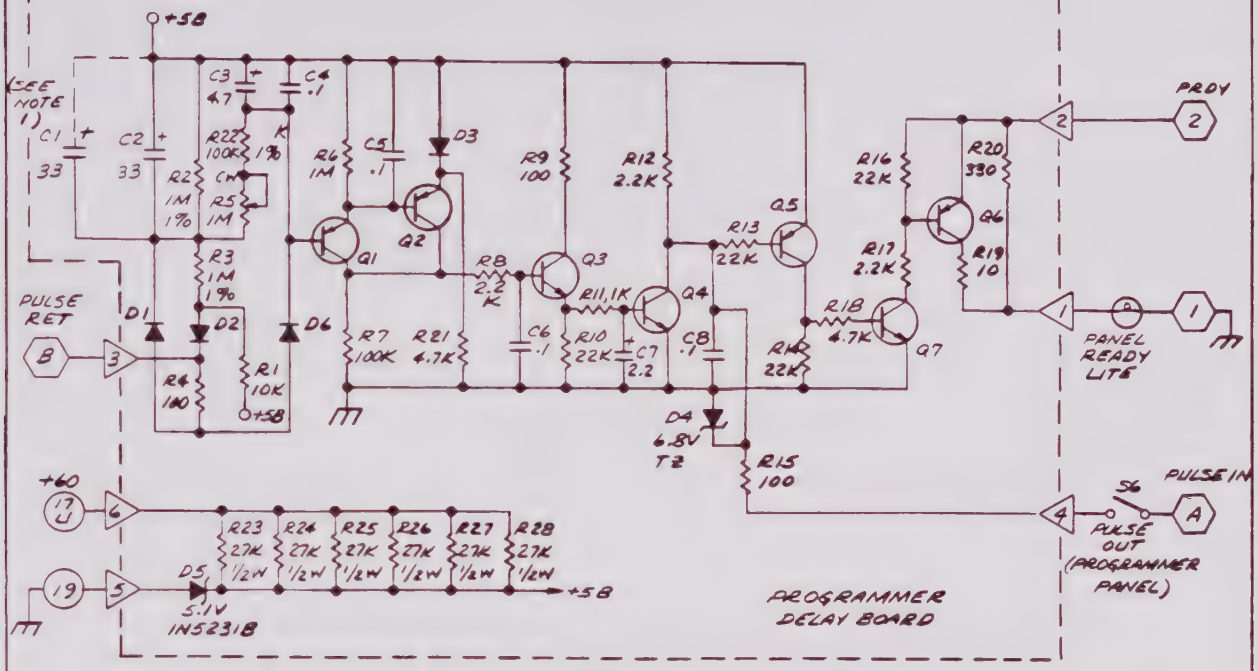


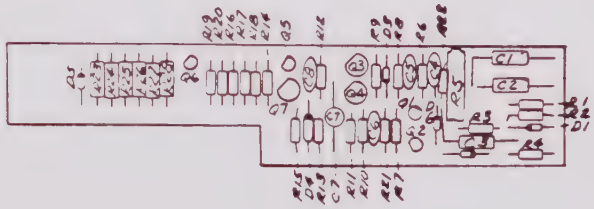


NOTES:

1. C1 SUPPLIED ONLY FOR PROGRAMMERS USING MODEL 211 ENERGY STORAGE UNIT
2. ○ SIGNIFIES CONNECTOR J5
   ⬡ SIGNIFIES CONNECTOR J6
   △ SIGNIFIES CONNECTION TO PROGRAMMER DELAY BOARD

REV. A – ADDED LOCATION

| | | |
|---|---|---|
| SCALE | APPROVED BY RSW | DRAWN BY |
| DATE | | |
| SCHEMATIC/LOCATION PROGRAMMER DELAY BOARD | | |
| KeyTek INSTRUMENT CORP. | | DRAWING NUMBER 42-423-700 A |

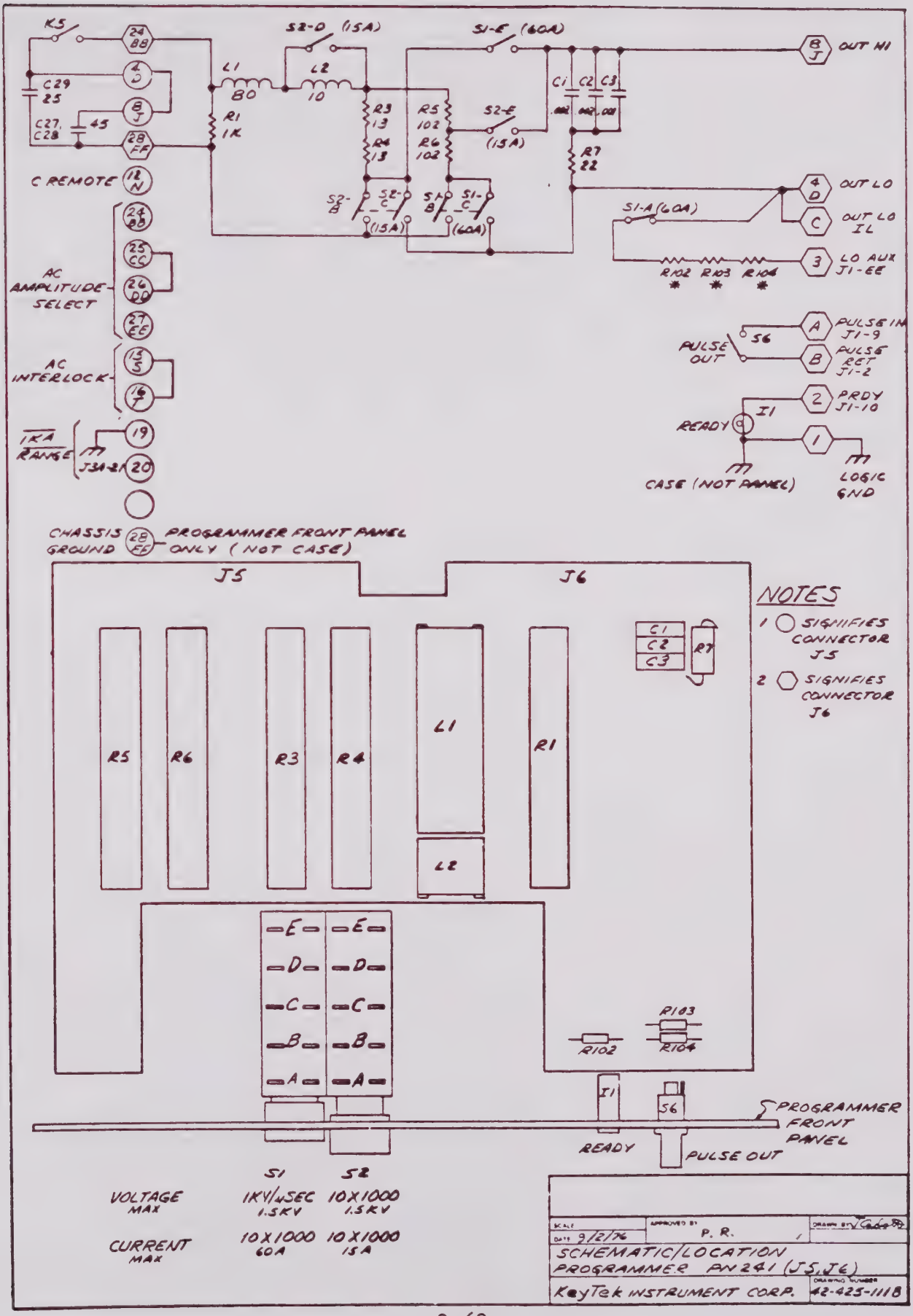
K5
S2-D (15A)
S1-E (60A)
OUT HI
C29 25
C27, C28 45
L1 80
L2 10
R1 1K
R3 13
R4 13
R5 102
R6 102
S2-E (15A)
C1 C2 C3
R7 22
OUT LO
OUT LO IL
S1-A (60A)
LO AUX J1-EE
R102 R103 R104
C REMOTE
AC AMPLITUDE SELECT
AC INTERLOCK
IKA RANGE
J3A-2A
PULSE IN J1-9
S6
PULSE OUT
PULSE RET J1-2
PRDY J1-10
I1
READY
CASE (NOT PANEL)
LOGIC GND
CHASSIS GROUND
PROGRAMMER FRONT PANEL ONLY (NOT CASE)
J5
J6
NOTES
1 ○ SIGNIFIES CONNECTOR J5
2 ⬡ SIGNIFIES CONNECTOR J6
L1
L2
R1
R3
R4
R5
R6
R7
C1
C2
C3
R102
R103
R104
I1
S6
PROGRAMMER FRONT PANEL
READY
PULSE OUT
S1
S2
VOLTAGE MAX
1KV/μSEC 1.5KV
10X1000 1.5KV
CURRENT MAX
10X1000 60A
10X1000 15A
P. R.
9/2/76
SCHEMATIC/LOCATION PROGRAMMER PN 241 (J5, J6)
KeyTek INSTRUMENT CORP.
42-425-1118

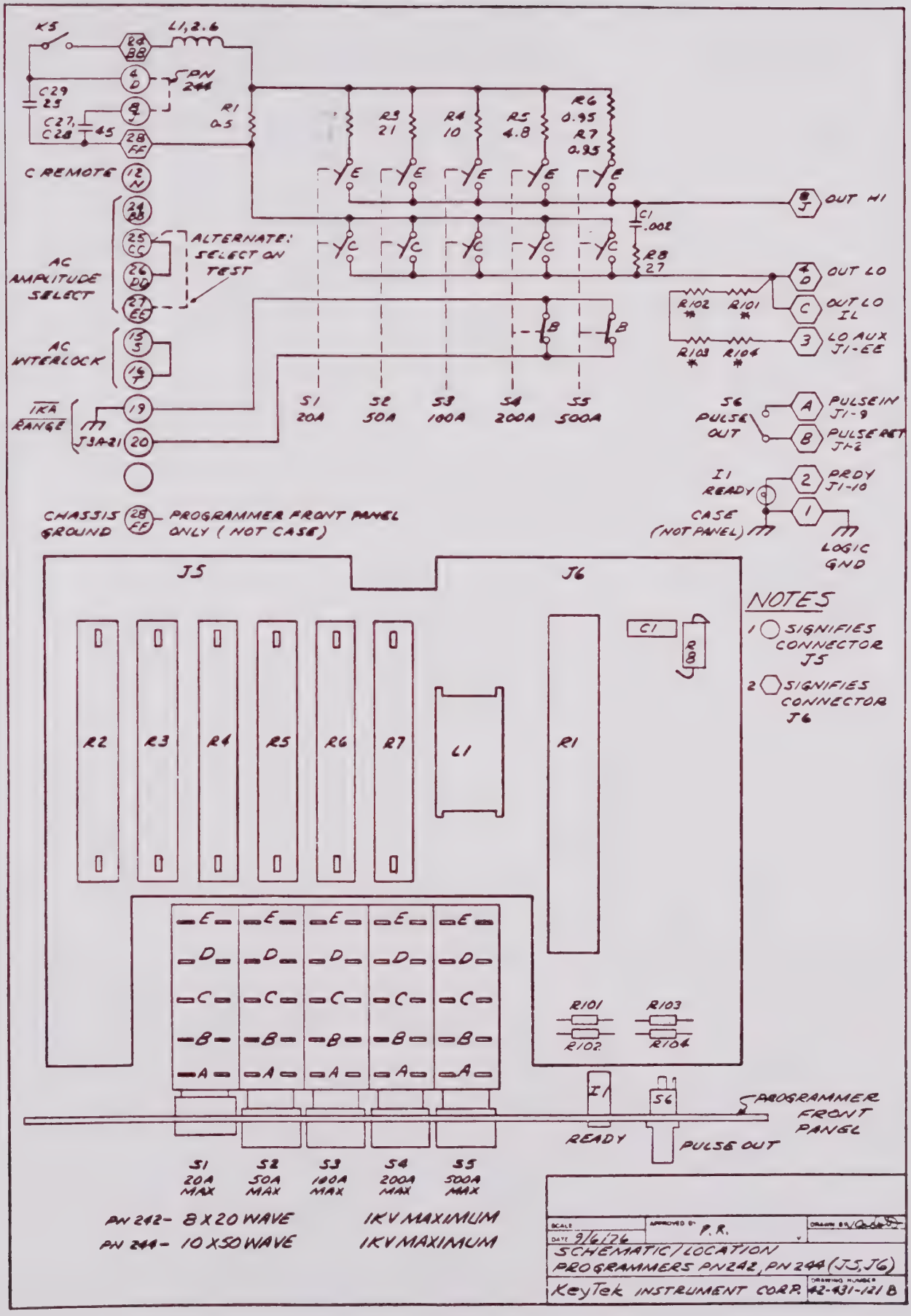
K5
L1, 2.6
PN 244
C29 25
C27, C28 45
R1 0.5
R2 21
R3 10
R4 4.8
R5 0.95
R6 0.95
R7 0.95
C REMOTE
AC AMPLITUDE SELECT
ALTERNATE: SELECT ON TEST
AC INTERLOCK
IKA RANGE
J3A21
S1 20A
S2 50A
S3 100A
S4 200A
S5 500A
C1 .002
R8 27
OUT HI
OUT LO
OUT LO IL
LO AUX J1-EE
R102
R101
R103
R104
S6 PULSE OUT
PULSE IN J1-9
PULSE RET J1-8
I1 READY
RDY J1-10
CASE (NOT PANEL)
LOGIC GND
CHASSIS GROUND
PROGRAMMER FRONT PANEL ONLY (NOT CASE)
J5
J6
NOTES
1 SIGNIFIES CONNECTOR J5
2 SIGNIFIES CONNECTOR J6
R2
R3
R4
R5
R6
R7
L1
R1
C1
R8
R101
R102
R103
R104
I1
S6
PROGRAMMER FRONT PANEL
READY
PULSE OUT
S1 20A MAX
S2 50A MAX
S3 100A MAX
S4 200A MAX
S5 500A MAX
PN 242- 8X20 WAVE
PN 244- 10X500 WAVE
1KV MAXIMUM
1KV MAXIMUM
SCALE
DATE 9/6/76
APPROVED BY P.R.
SCHEMATIC/LOCATION
PROGRAMMERS PN242, PN244 (J5, J6)
KeyTek INSTRUMENT CORP.
DRAWING NUMBER 42-431-121 B

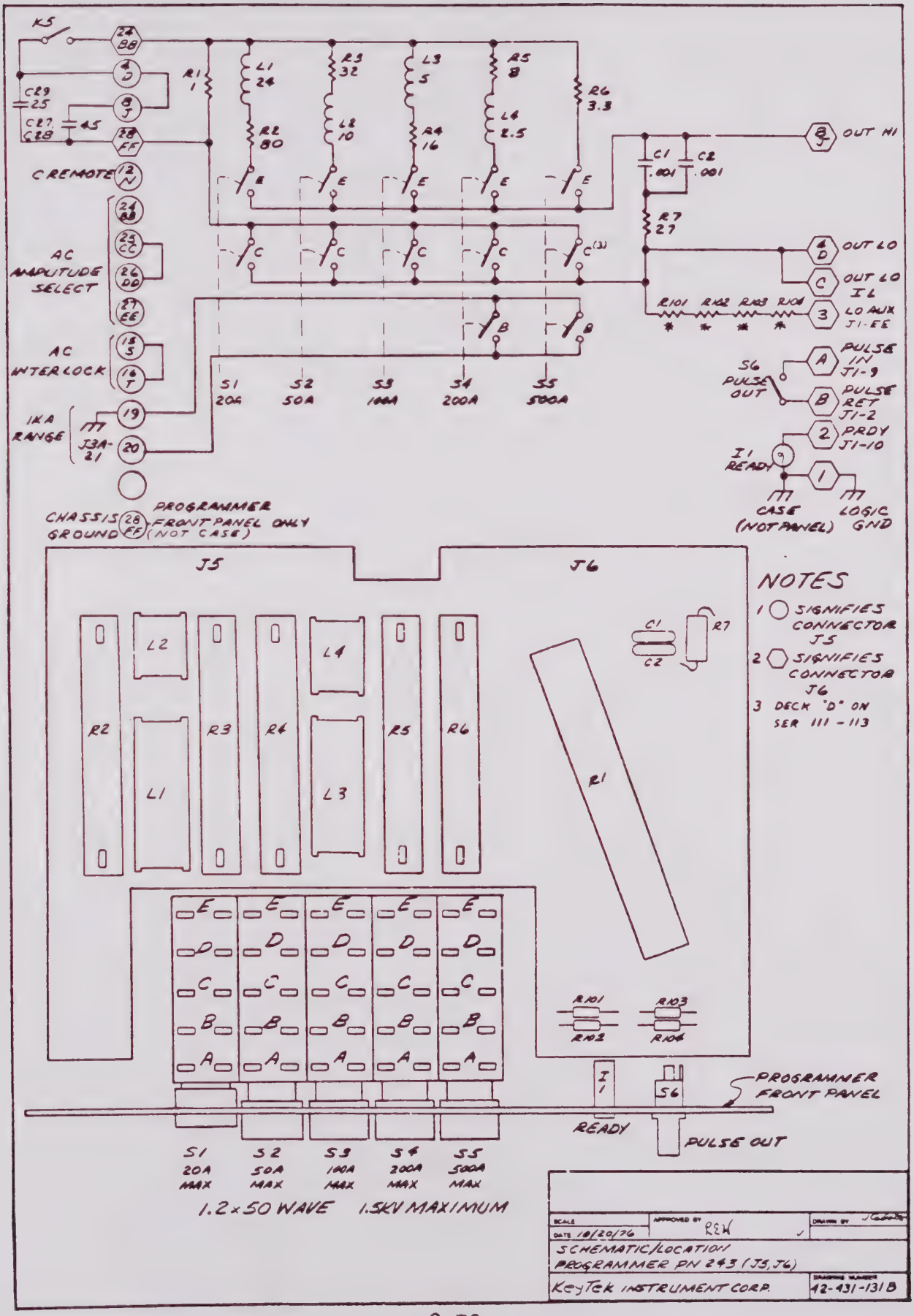
K5
C REMOTE
AC AMPLITUDE SELECT
AC INTERLOCK
IKA RANGE
J3A-21
CHASSIS GROUND
PROGRAMMER FRONT PANEL ONLY (NOT CASE)
R1 1
L1 24
R2 80
L2 10
R3 32
R4 16
L3 5
L4 2.5
R5 8
R6 3.3
C1 .001
C2 .001
R7 27
OUT HI
OUT LO
OUT LO IL
LO AUX J1-EE
R101 R102 R103 R104
S1 20A
S2 50A
S3 100A
S4 200A
S5 500A
S6 PULSE OUT
PULSE IN J1-9
PULSE RET J1-2
PRDY J1-10
I1 READY
CASE (NOT PANEL)
LOGIC GND
J5
J6
NOTES
1 ○ SIGNIFIES CONNECTOR J5
2 ⬡ SIGNIFIES CONNECTOR J6
3 DECK "D" ON SER 111 - 113
PROGRAMMER FRONT PANEL
READY
PULSE OUT
S1 20A MAX
S2 50A MAX
S3 100A MAX
S4 200A MAX
S5 500A MAX
1.2 x 50 WAVE 1.5KV MAXIMUM
SCALE
DATE 10/20/76
APPROVED BY R&W
DRAWN BY
SCHEMATIC/LOCATION PROGRAMMER PN 243 (J5, J6)
Keytek INSTRUMENT CORP.
DRAWING NUMBER 42-431-131B

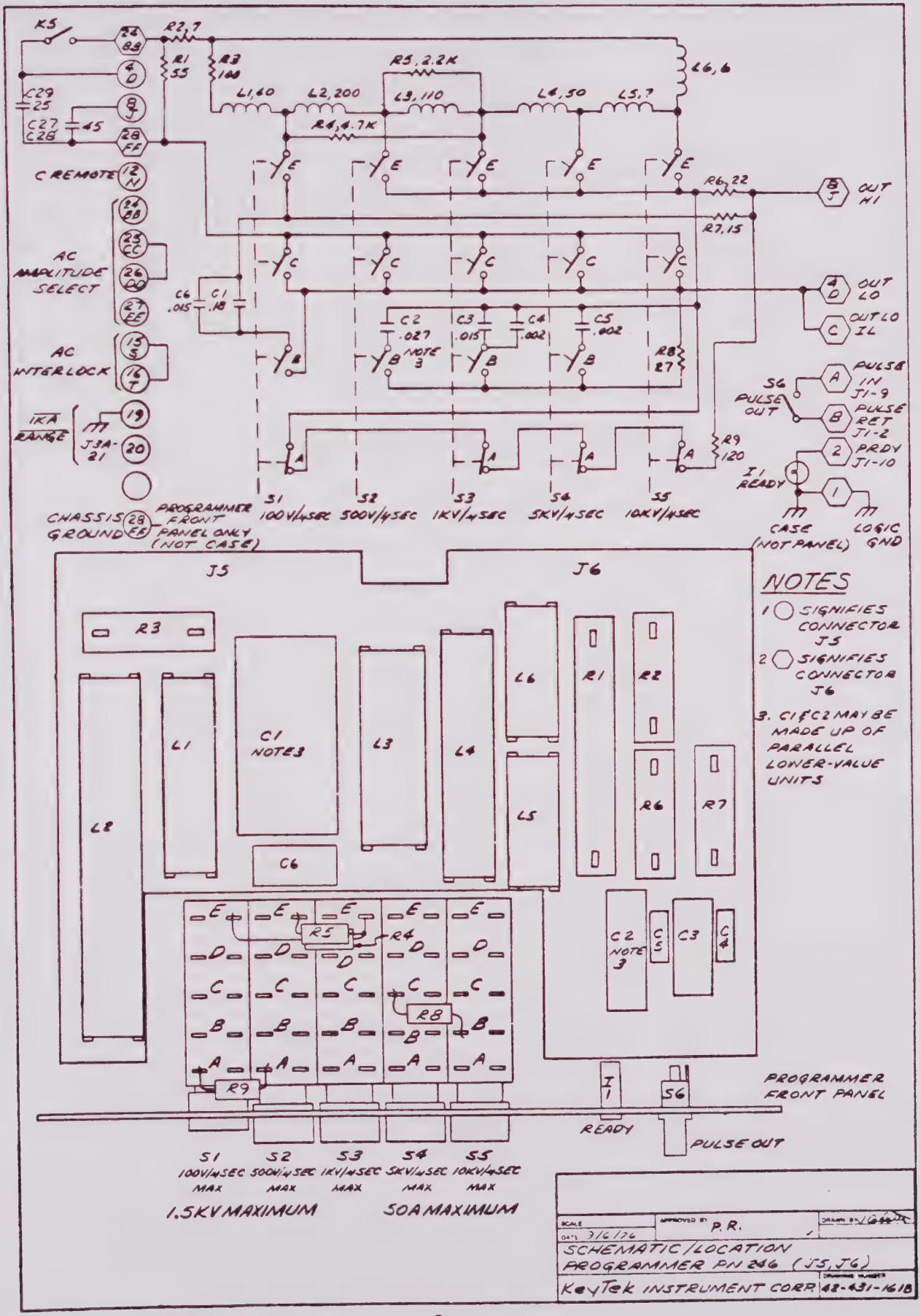
K5
R2,7
R1 55
R3 140
R5, 2.2K
L6, 6
L1, 40
L2, 200
L3, 110
L4, 50
L5, 7
R4, 4.7K
C29 25
C27 C28 45
C REMOTE
AC AMPLITUDE SELECT
AC INTERLOCK
IKA RANGE
J3A-21
R6, 22
R7, 15
OUT HI
OUT LO
OUT LO IL
C6 .015
C1 .18
C2 .027
C3 .015
C4 .002
C5 .002
NOTE 3
R8 27
R9 120
S6 PULSE OUT
PULSE IN J1-9
PULSE RET J1-2
PRDY J1-10
I1 READY
CASE (NOT PANEL)
LOGIC GND
CHASSIS GROUND
PROGRAMMER FRONT PANEL ONLY (NOT CASE)
S1 100V/μSEC
S2 500V/μSEC
S3 1KV/μSEC
S4 5KV/μSEC
S5 10KV/μSEC
J5
J6
R3
L1
L2
C1 NOTE3
C6
L3
L4
L6
L5
R1
R2
R6
R7
C2 NOTE 3
C5
C3
C4
R5
R4
R8
R9
I1
S6
PROGRAMMER FRONT PANEL
READY
PULSE OUT
S1 100V/μSEC MAX
S2 500V/μSEC MAX
S3 1KV/μSEC MAX
S4 5KV/μSEC MAX
S5 10KV/μSEC MAX
1.5KV MAXIMUM
50A MAXIMUM
NOTES
1 ○ SIGNIFIES CONNECTOR J5
2 ⬡ SIGNIFIES CONNECTOR J6
3. C1 & C2 MAY BE MADE UP OF PARALLEL LOWER-VALUE UNITS
SCALE
APPROVED BY P.R.
DRAWN BY
DATE 3/6/76
SCHEMATIC/LOCATION
PROGRAMMER PN 246 (J5, J6)
KeyTek INSTRUMENT CORP.
DRAWING NUMBER 48-431-1618

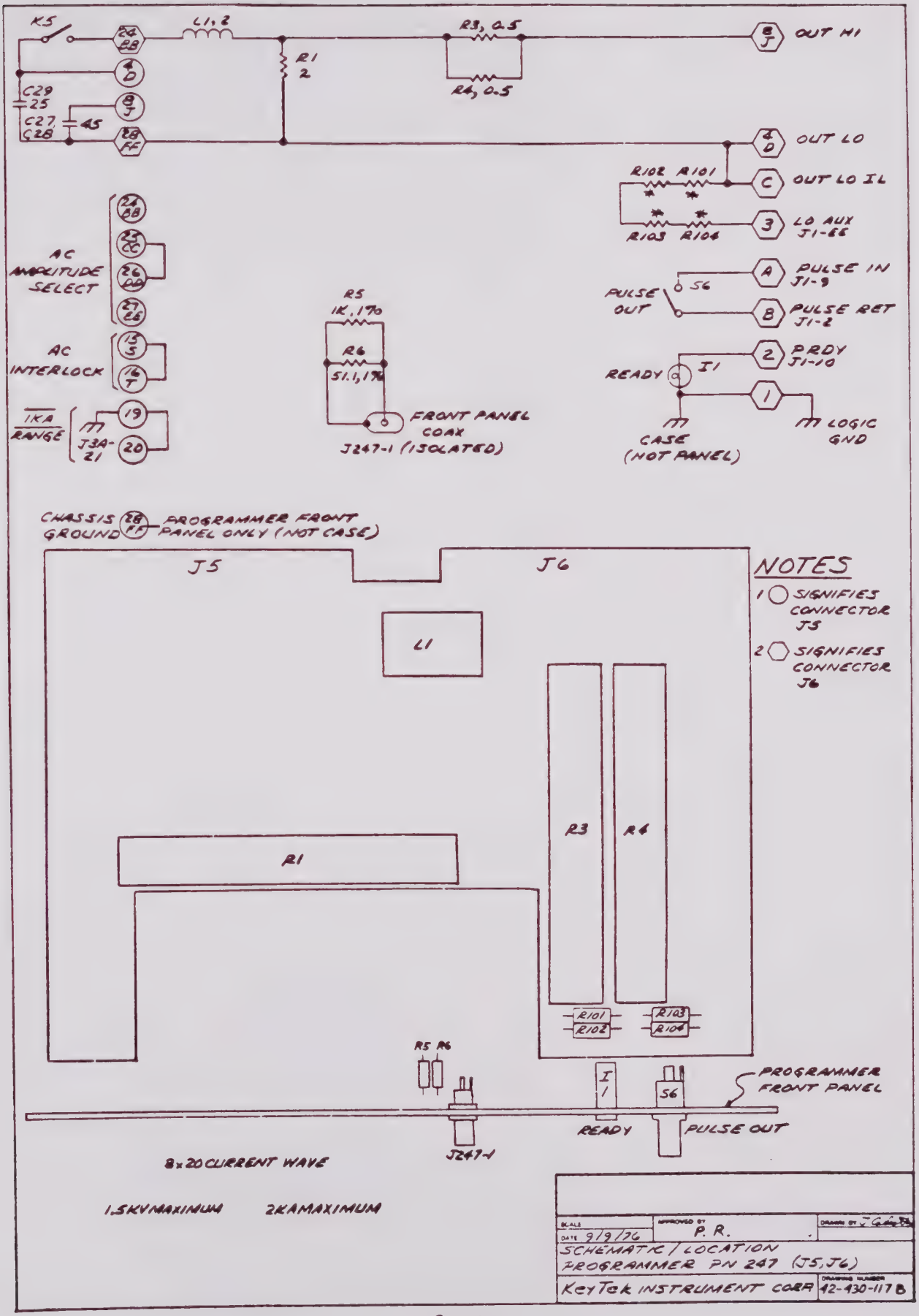
K5
L1, 2
R3, 0.5
R4, 0.5
R1
2
C29
25
C27
C28
45
OUT HI
OUT LO
OUT LO IL
LO AUX
J1-E5
R102
R101
R103
R104
AC
AMPLITUDE
SELECT
AC
INTERLOCK
IKA
RANGE
J3A-
21
R5
1K, 1%
R6
51.1, 1%
FRONT PANEL
COAX
J247-1 (ISOLATED)
PULSE
OUT
S6
PULSE IN
J1-9
PULSE RET
J1-2
READY
I1
PRDY
J1-10
CASE
(NOT PANEL)
LOGIC
GND
CHASSIS
GROUND
PROGRAMMER FRONT
PANEL ONLY (NOT CASE)
J5
J6
L1
R3
R4
R1
R101
R102
R103
R104
R5 R6
I1
S6
PROGRAMMER
FRONT PANEL
READY
PULSE OUT
J247-1
8x20 CURRENT WAVE
1.5KV MAXIMUM
2KA MAXIMUM
NOTES
1 SIGNIFIES CONNECTOR J5
2 SIGNIFIES CONNECTOR J6
SCALE
DATE 9/9/76
APPROVED BY
P. R.
DRAWN BY
SCHEMATIC / LOCATION
PROGRAMMER PN 247 (J5, J6)
KeyTek INSTRUMENT CORP
DRAWING NUMBER
42-430-117 B

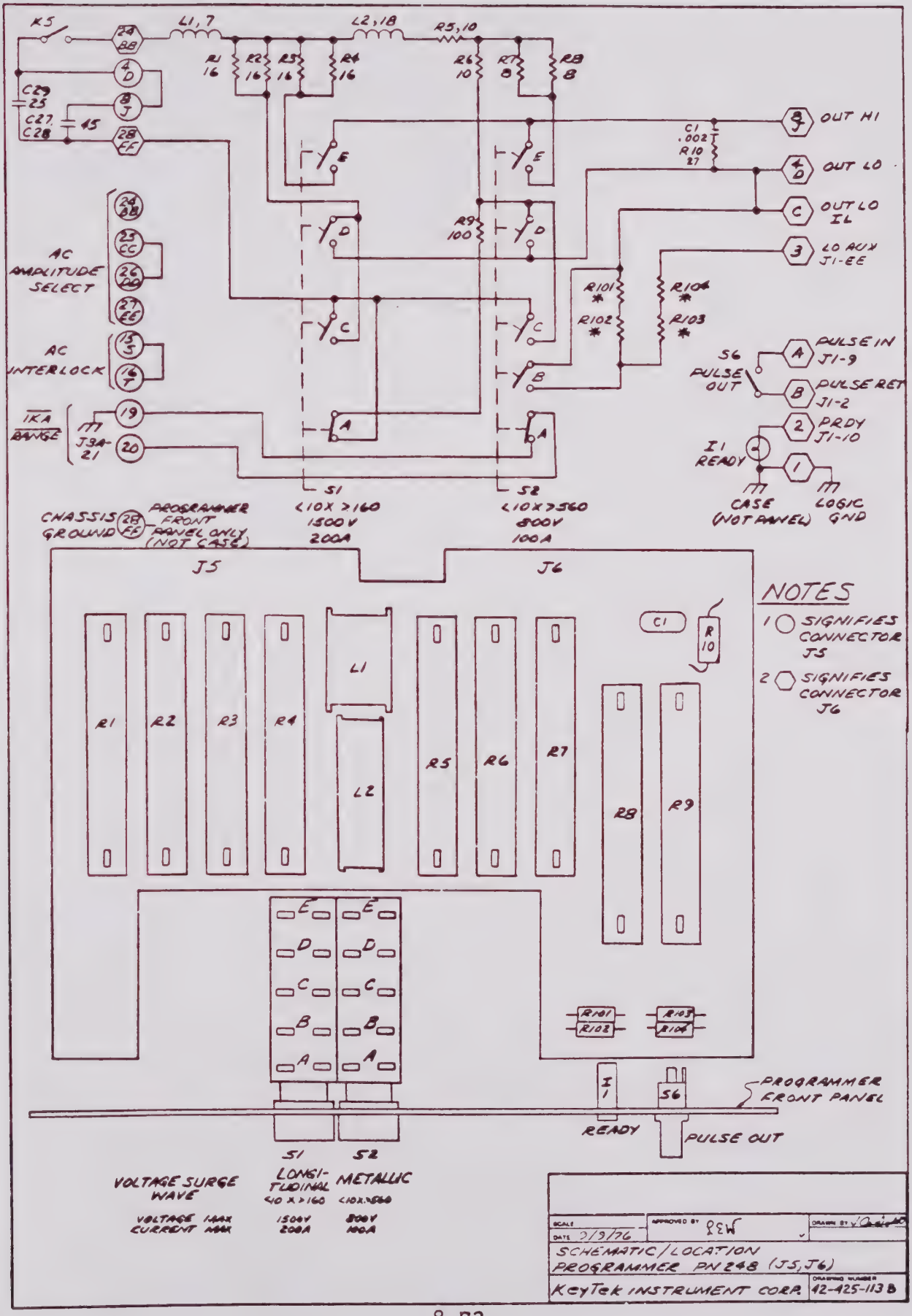
K5
L1, 7
L2, 18
R5, 10
R1 16
R2 16
R3 16
R4 16
R6 10
R7 8
R8 8
C29 25
C27 C28 15
OUT HI
OUT LO
OUT LO IL
LO AUX J1-EE
C1 .002
R10 27
R9 100
R101 *
R102 *
R104 *
R103 *
AC AMPLITUDE SELECT
AC INTERLOCK
IKA BANGE
J3A-21
S6
PULSE OUT
PULSE IN J1-9
PULSE RET J1-2
PRDY J1-10
I1 READY
CASE (NOT PANEL)
LOGIC GND
CHASSIS GROUND
PROGRAMMER FRONT PANEL ONLY (NOT CASE)
S1 <10X>160 1500V 200A
S2 <10X>360 800V 100A
J5
J6
NOTES
1 ○ SIGNIFIES CONNECTOR J5
2 ⬡ SIGNIFIES CONNECTOR J6
L1
L2
PROGRAMMER FRONT PANEL
READY
PULSE OUT
VOLTAGE SURGE WAVE
LONGI-TUDINAL
METALLIC
VOLTAGE MAX
CURRENT MAX
1500V 200A
800V 100A
SCALE
DATE 2/9/76
APPROVED BY
DRAWN BY
SCHEMATIC/LOCATION PROGRAMMER PN 248 (J5, J6)
KeyTek INSTRUMENT CORP.
DRAWING NUMBER 42-425-113 B

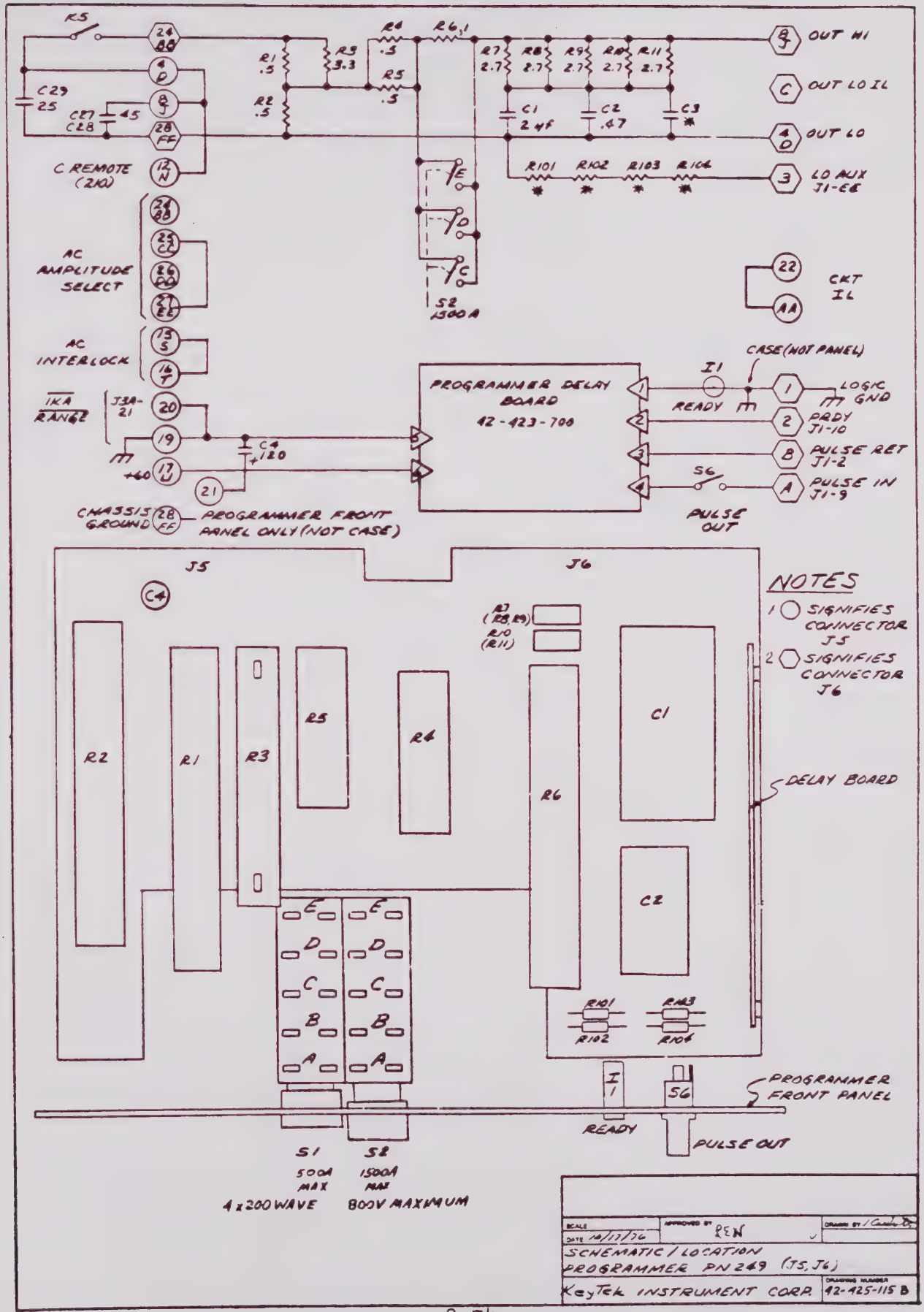
K5
C29 25
C27 C28 45
C REMOTE (210)
AC AMPLITUDE SELECT
AC INTERLOCK
1KA RANGE
J3A-21
+60
CHASSIS GROUND
PROGRAMMER FRONT PANEL ONLY (NOT CASE)
R1 .5
R2 .5
R3 3.3
R4 .5
R5 .5
R6 1
R7 2.7
R8 2.7
R9 2.7
R10 2.7
R11 2.7
C1 2 μf
C2 .47
C3
R101
R102
R103
R104
S2 1500 A
OUT HI
OUT LO IL
OUT LO
LO AUX J1-EE
CKT IL
PROGRAMMER DELAY BOARD 42-423-700
C4 120
I1
READY
CASE (NOT PANEL)
LOGIC GND
PRDY J1-10
PULSE RET J1-2
PULSE IN J1-9
S6
PULSE OUT
J5
J6
C4
R2
R1
R3
R5
R4
R6
C1
C2
R7 (R8, R9)
R10 (R11)
R101
R102
R103
R104
DELAY BOARD
NOTES
1 SIGNIFIES CONNECTOR J5
2 SIGNIFIES CONNECTOR J6
PROGRAMMER FRONT PANEL
READY
PULSE OUT
S1 500A MAX 4 x 200 WAVE
S2 1500A MAX 800V MAXIMUM
SCALE
DATE 10/17/76
APPROVED BY REN
DRAWN BY
SCHEMATIC / LOCATION PROGRAMMER PN 249 (J5, J6)
KeyTek INSTRUMENT CORP.
DRAWING NUMBER 42-425-115 B

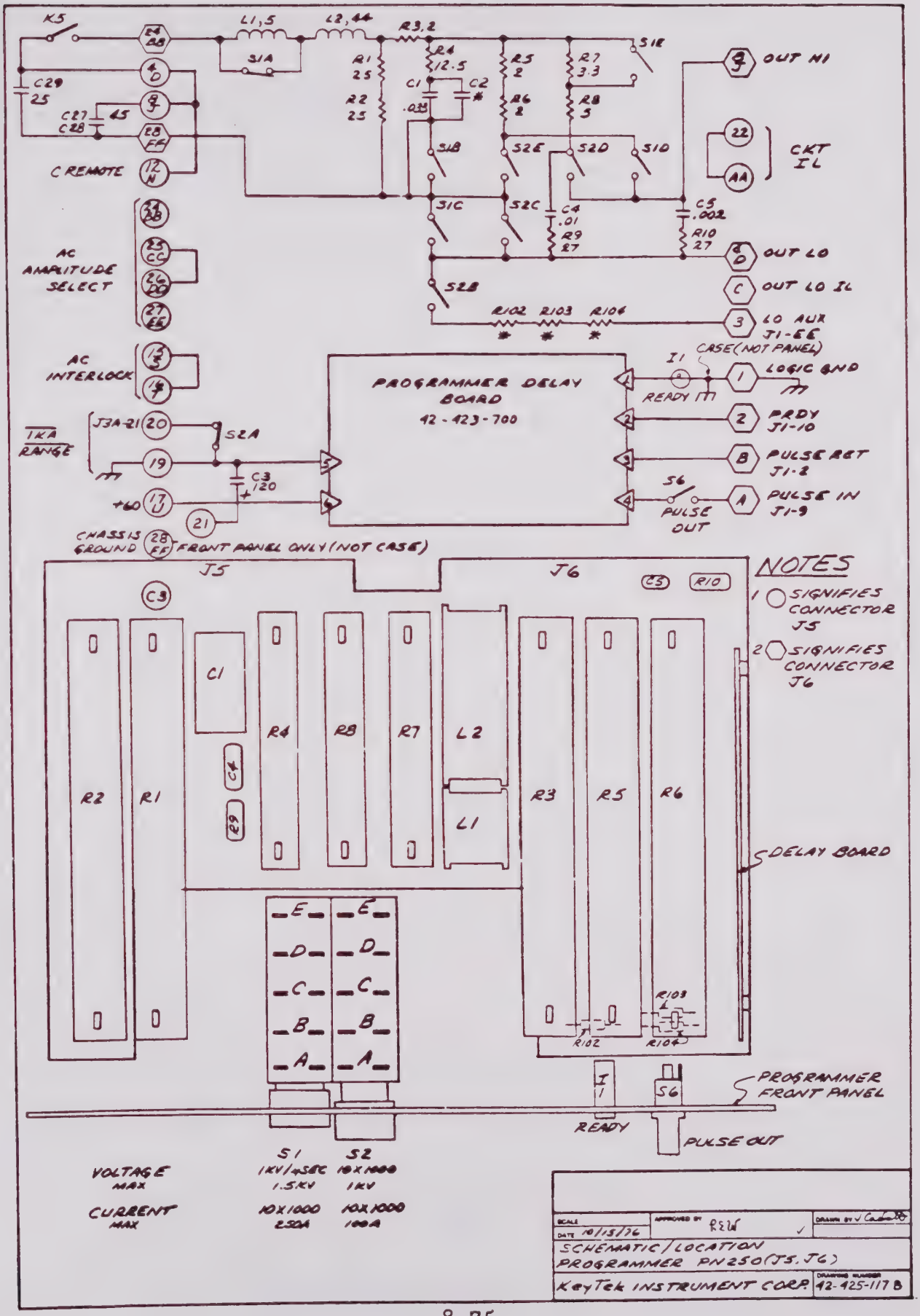
K5
L1,5
L2,44
R3,2
S1A
R1 25
R2 25
R4 12.5
C1 .033
C2 *
R5 2
R6 2
R7 3.3
R8 5
S1E
OUT HI
C29 25
C27 45
C28
C REMOTE
S1B
S2E
S2D
S1D
CKT IL
S1C
S2C
C4 .01
R9 27
C5 .002
R10 27
OUT LO
AC AMPLITUDE SELECT
S2B
OUT LO IL
R102 R103 R104
LO AUX J1-EE
AC INTERLOCK
CASE (NOT PANEL)
I1
LOGIC GND
PROGRAMMER DELAY BOARD
42-423-700
READY
PRDY J1-10
1KA RANGE
J3A-21
S2A
PULSE RET J1-2
C3 120
S6
PULSE IN J1-9
+60
PULSE OUT
CHASSIS GROUND
FRONT PANEL ONLY (NOT CASE)
J5
J6
NOTES
1 SIGNIFIES CONNECTOR J5
2 SIGNIFIES CONNECTOR J6
C3
C5
R10
C1
R4
R8
R7
L2
L1
R2
R1
C4
R9
R3
R5
R6
DELAY BOARD
E
D
C
B
A
R103
R102
R104
I1
S6
PROGRAMMER FRONT PANEL
READY
PULSE OUT
S1
S2
VOLTAGE MAX
1KV/μSEC 1.5KV
10X1000 1KV
CURRENT MAX
10X1000 250A
10X1000 100A
SCALE
DATE 10/15/76
APPROVED BY REW
DRAWN BY
SCHEMATIC/LOCATION
PROGRAMMER PN250 (J5, J6)
KeyTek INSTRUMENT CORP.
DRAWING NUMBER 42-425-117 B

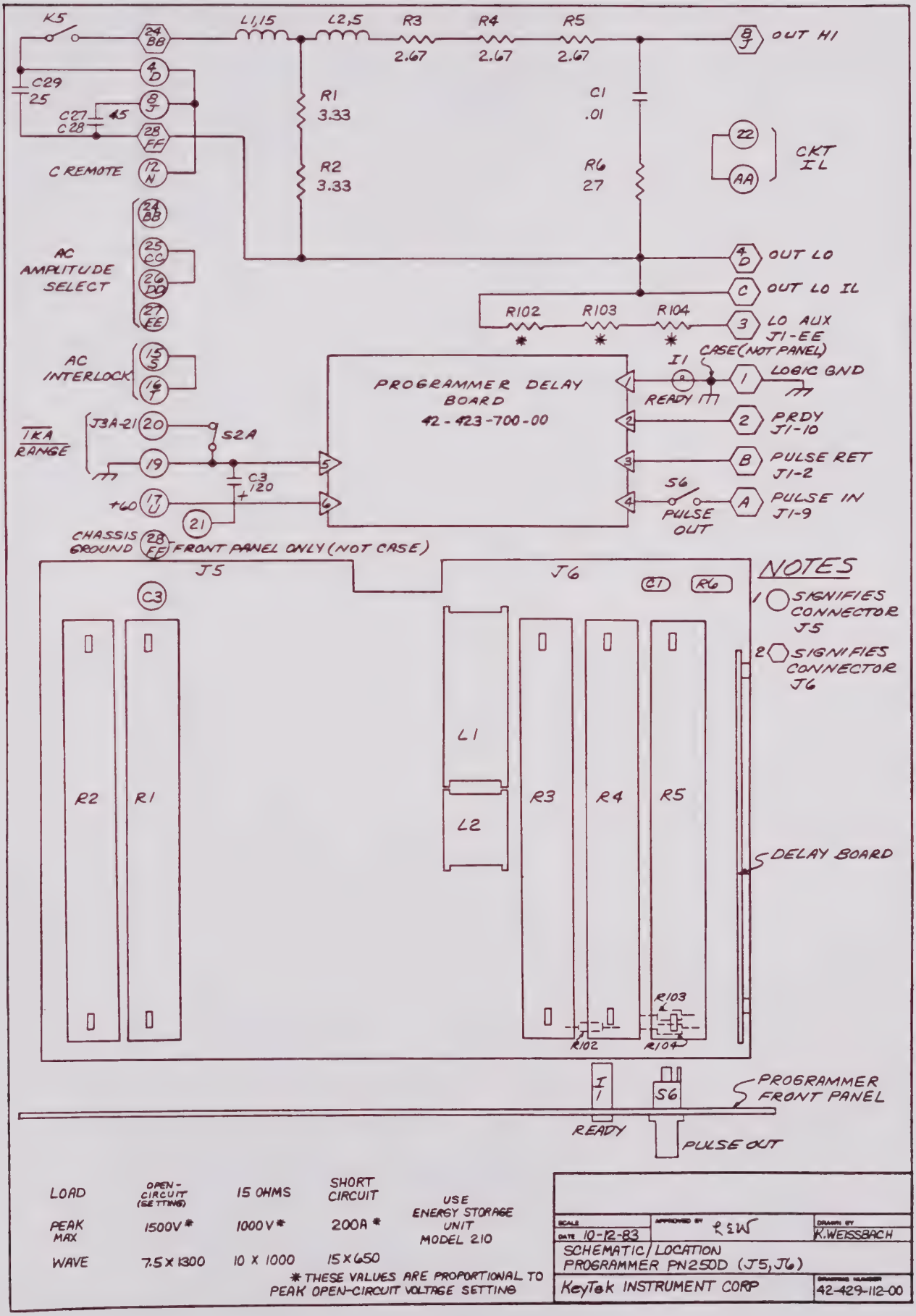


| LOAD | OPEN-CIRCUIT (SETTING) | 15 OHMS | SHORT CIRCUIT |
|---|---|---|---|
| PEAK MAX | 1500V * | 1000V * | 200A * |
| WAVE | 7.5 X 1300 | 10 X 1000 | 15 X 650 |

USE ENERGY STORAGE UNIT MODEL 210

* THESE VALUES ARE PROPORTIONAL TO PEAK OPEN-CIRCUIT VOLTAGE SETTING

| | | |
|---|---|---|
| SCALE | APPROVED BY R.S.W | DRAWN BY K.WEISSBACH |
| DATE 10-12-83 | | |

SCHEMATIC/LOCATION
PROGRAMMER PN250D (J5,J6)

KeyTek INSTRUMENT CORP — 42-429-112-00

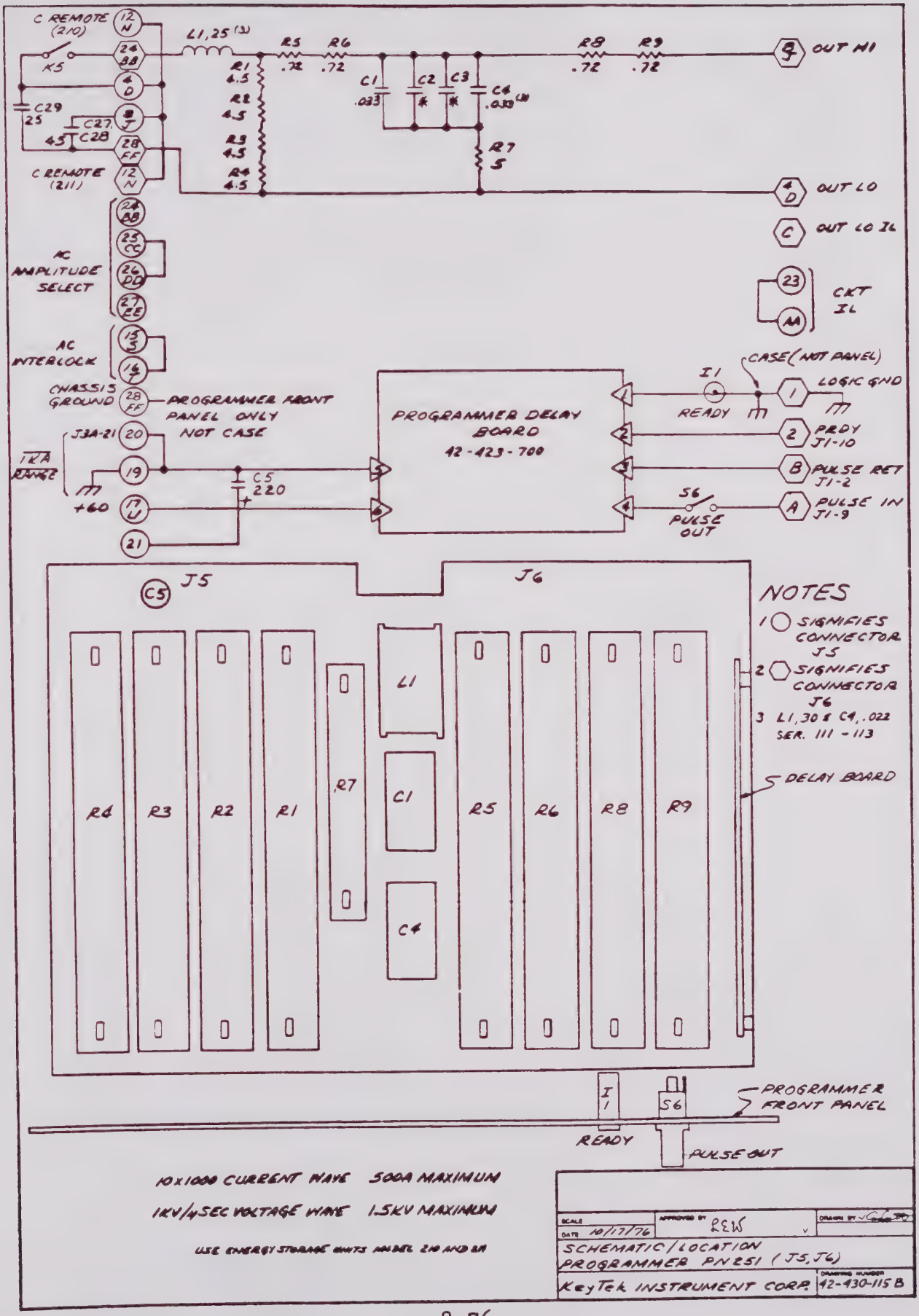
C REMOTE (210)
K5
L1, 25 (3)
R5 .72
R6 .72
C1 .033
C2 *
C3 *
C4 .030 (4)
R8 .72
R9 .72
OUT HI
C29 25
C27 45
C28
R1 4.5
R2 4.5
R3 4.5
R4 4.5
R7 5
C REMOTE (211)
OUT LO
OUT LO IL
AC AMPLITUDE SELECT
CKT IL
AC INTERLOCK
CASE (NOT PANEL)
I1
LOGIC GND
READY
PRDY J1-10
PULSE RET J1-2
PULSE IN J1-9
S6
PULSE OUT
CHASSIS GROUND
PROGRAMMER FRONT PANEL ONLY NOT CASE
J3A-21
I KA RANGE
+60
C5 220
PROGRAMMER DELAY BOARD 42-423-700
J5
J6
C5
L1
R7
C1
C4
R4
R3
R2
R1
R5
R6
R8
R9
DELAY BOARD
PROGRAMMER FRONT PANEL
READY
PULSE OUT
NOTES
1 ○ SIGNIFIES CONNECTOR J5
2 ⬡ SIGNIFIES CONNECTOR J6
3 L1, 30 # C4, .022 SER. 111 - 113
10 x 1000 CURRENT WAVE 500A MAXIMUM
1KV/4SEC VOLTAGE WAVE 1.5KV MAXIMUM
USE ENERGY STORAGE UNITS MODEL 210 AND 211
SCALE
DATE 10/17/76
APPROVED BY REW
DRAWN BY
SCHEMATIC/LOCATION PROGRAMMER PN 251 (J5, J6)
KeyTek INSTRUMENT CORP.
DRAWING NUMBER 42-430-115 B

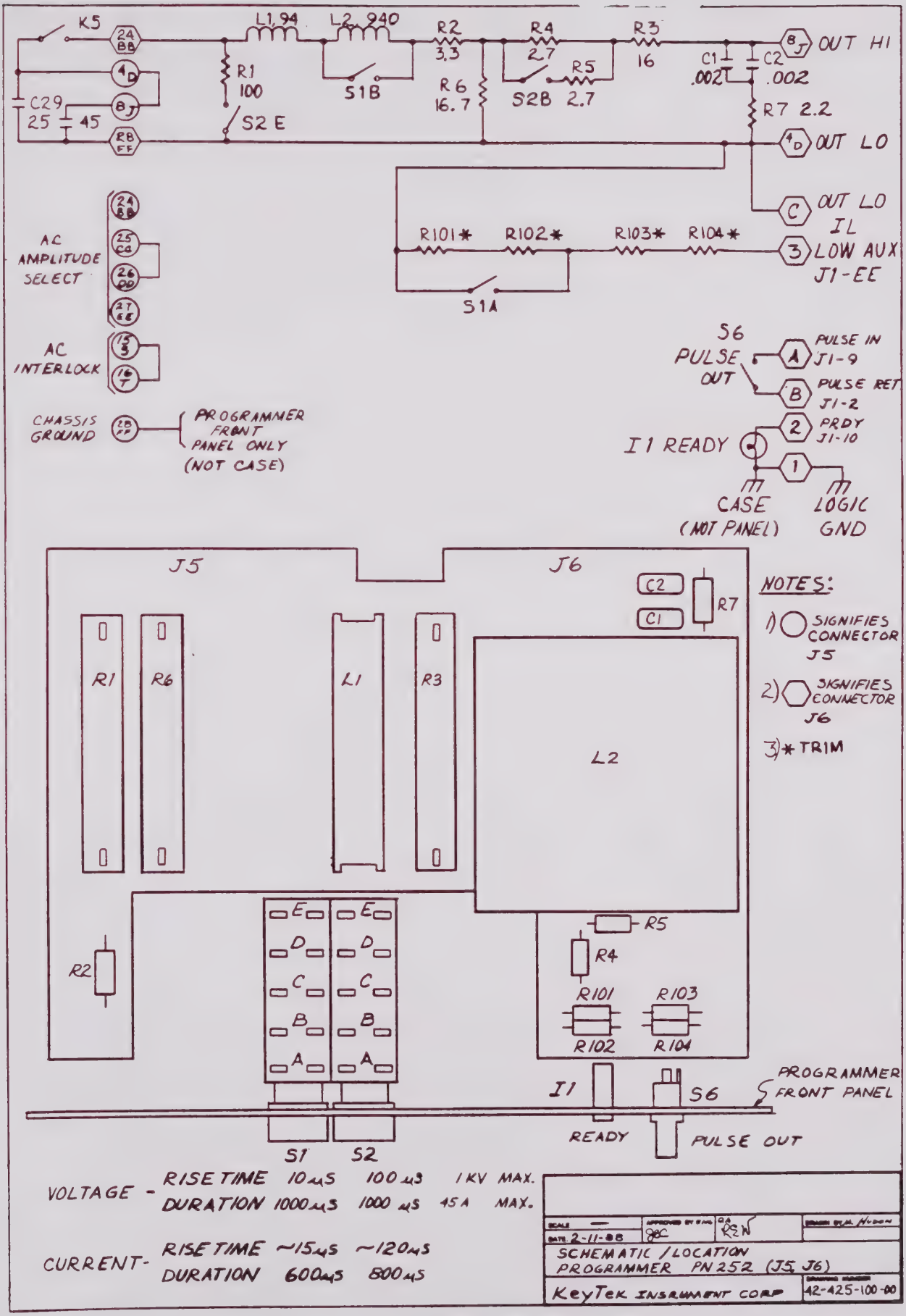
K5
L1 94
L2 940
R2 3.3
R4 2.7
R3 16
C1 .002
C2 .002
OUT HI
R1 100
S1B
R6 16.7
S2B
R5 2.7
R7 2.2
S2 E
C29 25 45
OUT LO
OUT LO IL
R101* R102* R103* R104*
LOW AUX J1-EE
S1A
AC AMPLITUDE SELECT
AC INTERLOCK
CHASSIS GROUND
PROGRAMMER FRONT PANEL ONLY (NOT CASE)
S6 PULSE OUT
PULSE IN J1-9
PULSE RET J1-2
I1 READY
PRDY J1-10
CASE (NOT PANEL)
LOGIC GND
J5
J6
C2
C1
R7
R1
R6
L1
R3
L2
R2
R5
R4
R101
R103
R102
R104
E
D
C
B
A
S1
S2
I1
S6
READY
PULSE OUT
PROGRAMMER FRONT PANEL
NOTES:
1) SIGNIFIES CONNECTOR J5
2) SIGNIFIES CONNECTOR J6
3) * TRIM
VOLTAGE - RISETIME 10µS 100µS 1KV MAX.
DURATION 1000µS 1000µS 45A MAX.
CURRENT- RISETIME ~15µS ~120µS
DURATION 600µS 800µS
DATE 2-11-88
SCHEMATIC / LOCATION
PROGRAMMER PN252 (J5, J6)
KeyTek INSTRUMENT CORP
42-425-100-00

original

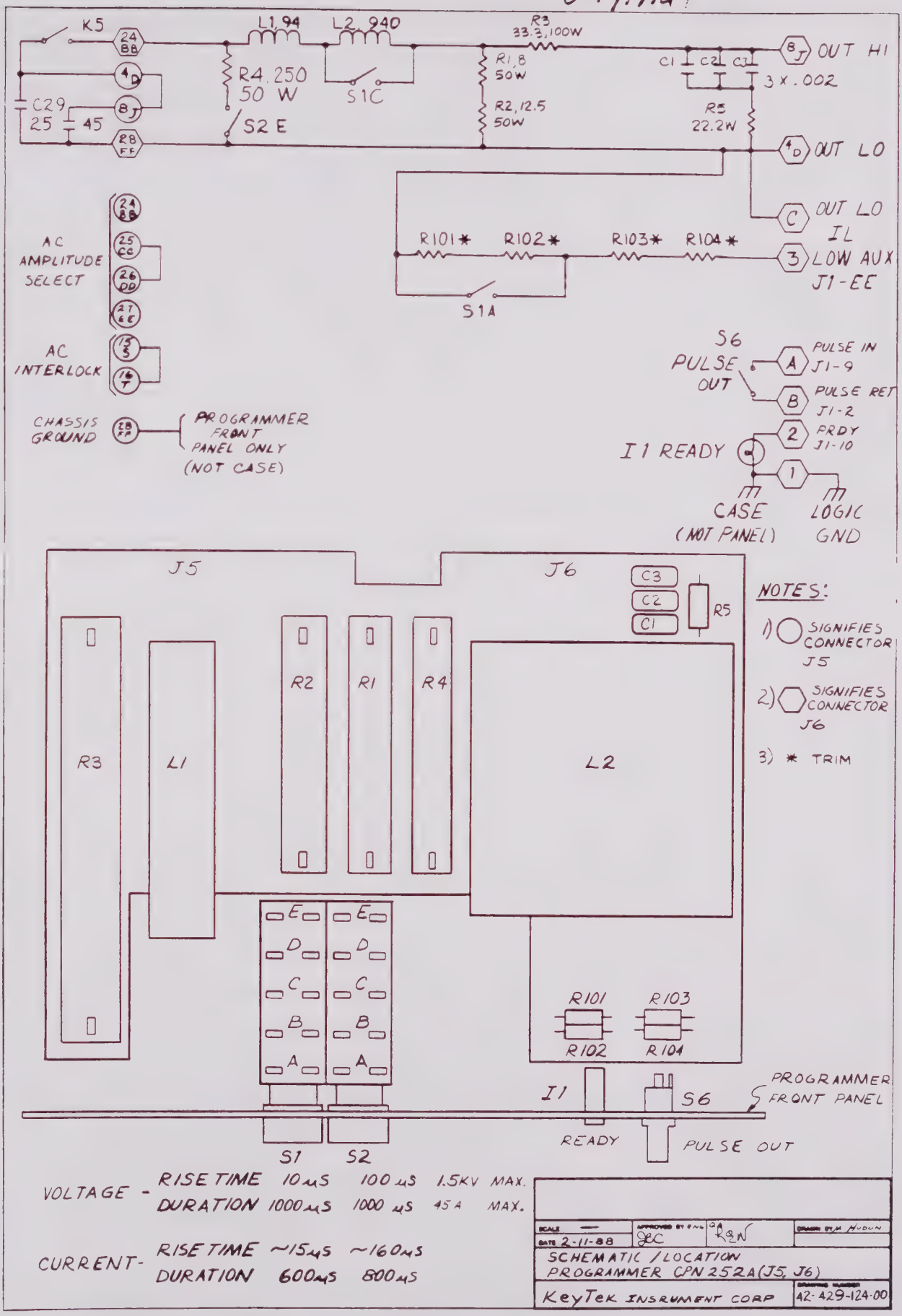
K5
24 BB
4 D
8 J
28 FF
C29
25
45
L1, 94
L2, 940
R4, 250
50 W
S1C
S2 E
R3
33.3, 100W
R1, 8
50W
R2, 12.5
50W
C1
C2
C3
3 X .002
R5
22.2W
8 J
OUT HI
4 D
OUT LO
C
OUT LO
IL
3
LOW AUX
J1-EE
R101*
R102*
R103*
R104*
S1A
AC
AMPLITUDE
SELECT
24 BB
25 CC
26 DD
27 EE
AC
INTERLOCK
15 S
16 T
CHASSIS
GROUND
28 FF
PROGRAMMER
FRONT
PANEL ONLY
(NOT CASE)
S6
PULSE
OUT
A
PULSE IN
J1-9
B
PULSE RET
J1-2
2
PRDY
J1-10
I1 READY
1
CASE
(NOT PANEL)
LOGIC
GND
J5
J6
C3
C2
C1
R5
R3
L1
R2
R1
R4
L2
E
D
C
B
A
R101
R103
R102
R104
I1
S6
PROGRAMMER
FRONT PANEL
READY
PULSE OUT
S1
S2
NOTES:
1) SIGNIFIES CONNECTOR J5
2) SIGNIFIES CONNECTOR J6
3) * TRIM
VOLTAGE - RISE TIME 10 µS 100 µS 1.5KV MAX.
DURATION 1000 µS 1000 µS 45 A MAX.
CURRENT- RISE TIME ~15 µS ~160 µS
DURATION 600 µS 800 µS
SCALE —
DATE 2-11-88
APPROVED BY ENG
QA
DRAWN BY M. HUDON
SCHEMATIC / LOCATION
PROGRAMMER CPN 252A (J5, J6)
KeyTek INSRUMENT CORP
DRAWING NUMBER
42-429-124-00

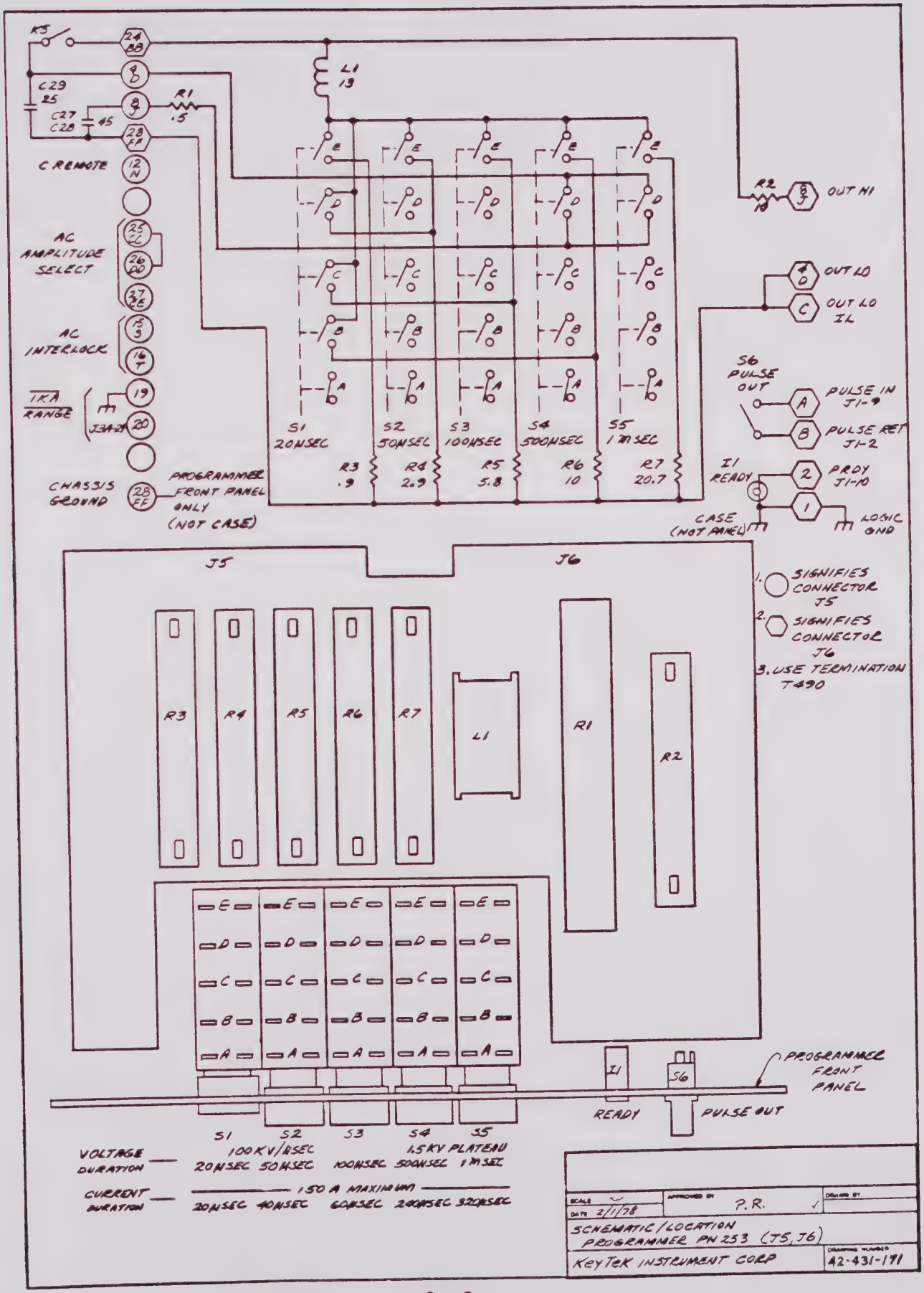
K5
24 AA
9 D
8 J
28 FF
C29 25
C27 C28 45
R1 .5
C REMOTE
12 N
AC AMPLITUDE SELECT
25 CC
26 DD
37 EE
AC INTERLOCK
15 S
16 T
IRA RANGE
19
20
J3A-21
CHASSIS GROUND
28 FF
PROGRAMMER FRONT PANEL ONLY (NOT CASE)
L1 13
S1 20 NSEC
S2 50 NSEC
S3 100 NSEC
S4 500 NSEC
S5 1 M SEC
R3 .9
R4 2.9
R5 5.8
R6 10
R7 20.7
R2 10
OUT HI
OUT LO
OUT LO IL
S6 PULSE OUT
PULSE IN J1-9
PULSE RET J1-2
I1 READY
PRDY J1-10
LOGIC GND
CASE (NOT PANEL)
J5
J6
1. SIGNIFIES CONNECTOR J5
2. SIGNIFIES CONNECTOR J6
3. USE TERMINATION T490
R3
R4
R5
R6
R7
L1
R1
R2
I1
S6
READY
PULSE OUT
PROGRAMMER FRONT PANEL
S1
S2
S3
S4
S5
VOLTAGE DURATION
100 KV/ASEC
1.5 KV PLATEAU
20 NSEC 50 NSEC 100 NSEC 500 NSEC 1 M SEC
CURRENT DURATION
150 A MAXIMUM
20 NSEC 40 NSEC 60 NSEC 240 NSEC 320 NSEC
SCALE
APPROVED BY P.R.
DRAWN BY
DATE 2/1/78
SCHEMATIC/LOCATION PROGRAMMER PN 253 (J5, J6)
KeyTek INSTRUMENT CORP
DRAWING NUMBER 42-431-171

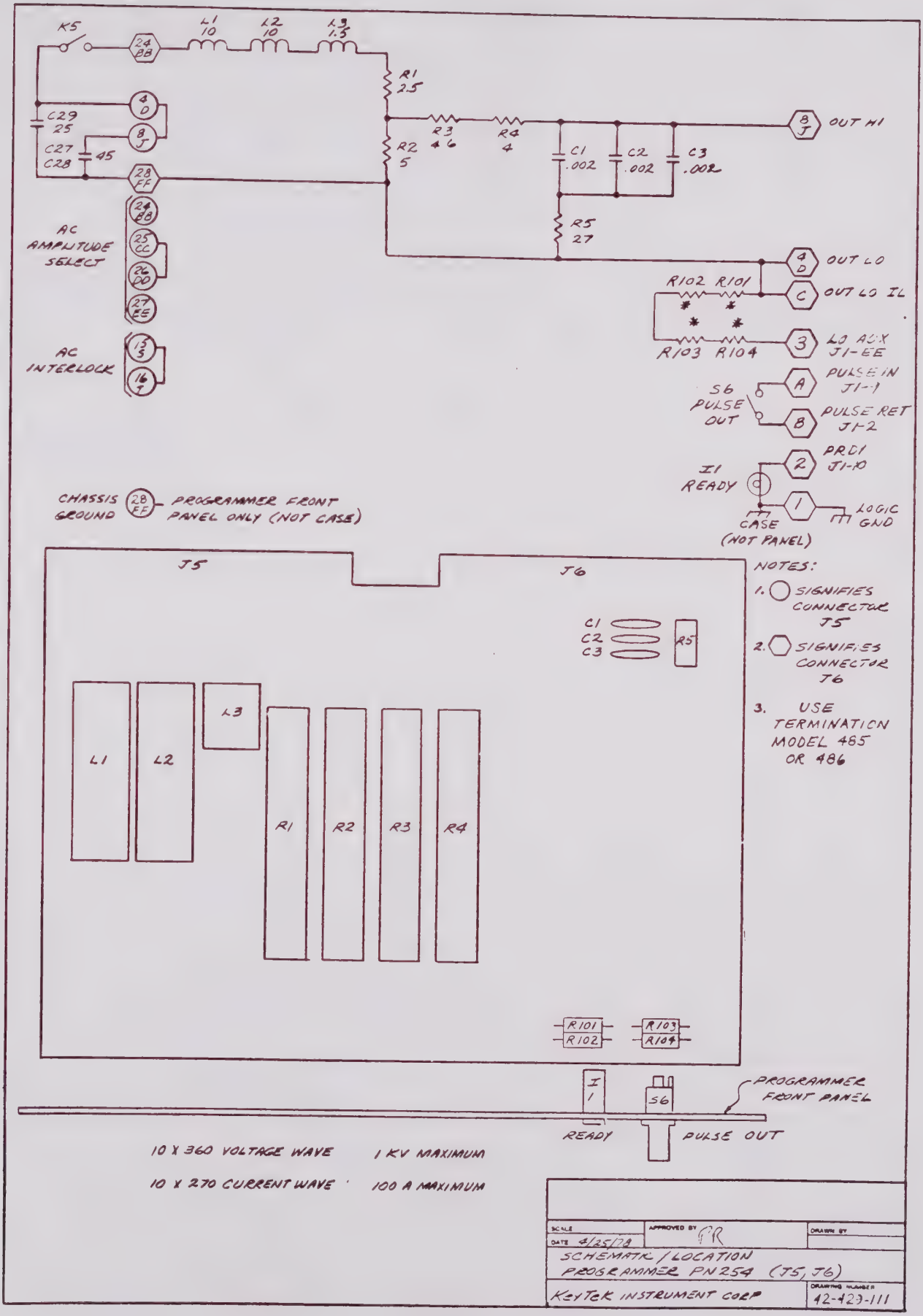
K5
24 BB
L1 10
L2 10
L3 1.5
R1 25
R2 5
R3 4.6
R4 4
C1 .002
C2 .002
C3 .002
R5 27
C29 25
C27 C28 45
4 D
8 J
28 FF
OUT HI
OUT LO
OUT LO IL
LO AUX J1-EE
PULSE IN J1-1
PULSE RET J1-2
PRDI J1-10
LOGIC GND
CASE (NOT PANEL)
AC AMPLITUDE SELECT
24 BB
25 CC
26 DD
27 EE
AC INTERLOCK
13 S
16 T
R102 R101
R103 R104
S6 PULSE OUT
A
B
C
3
2
1
I1 READY
CHASSIS GROUND
28 FF
PROGRAMMER FRONT PANEL ONLY (NOT CASE)
J5
J6
C1
C2
C3
R5
L1
L2
L3
R1
R2
R3
R4
R101
R102
R103
R104
I 1
S6
PROGRAMMER FRONT PANEL
READY
PULSE OUT
10 X 360 VOLTAGE WAVE
1 KV MAXIMUM
10 X 270 CURRENT WAVE
100 A MAXIMUM
NOTES:
1. ○ SIGNIFIES CONNECTOR J5
2. ⬡ SIGNIFIES CONNECTOR J6
3. USE TERMINATION MODEL 485 OR 486
SCALE
APPROVED BY
DRAWN BY
DATE 4/25/79
SCHEMATIC / LOCATION
PROGRAMMER PN 254 (J5, J6)
KeyTek INSTRUMENT CORP
DRAWING NUMBER
42-429-111

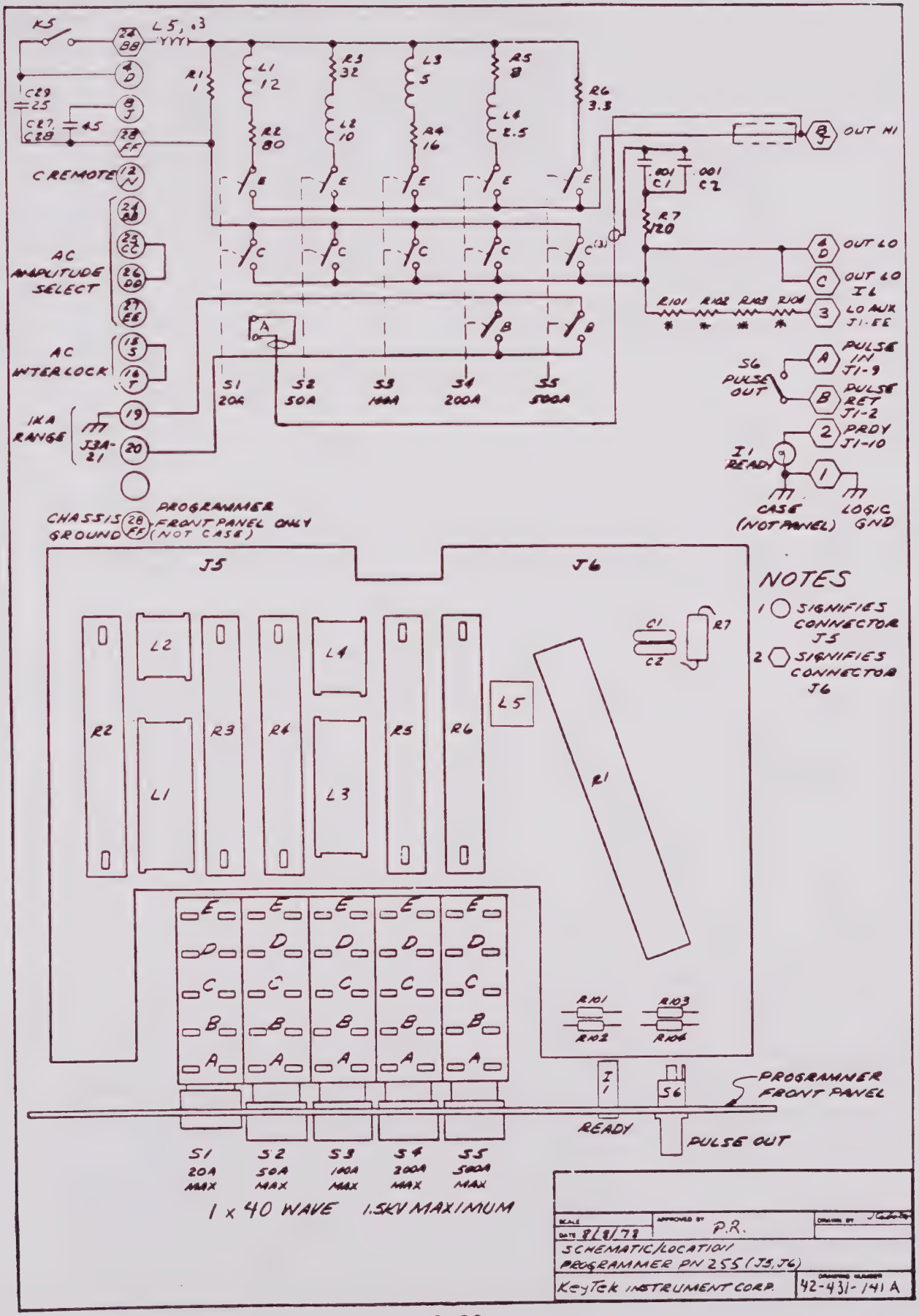


NOTES

1 ○ SIGNIFIES CONNECTOR J5

2 ⬡ SIGNIFIES CONNECTOR J6

| | | |
|---|---|---|
| SCALE | APPROVED BY P.R. | DRAWN BY |
| DATE 8/8/73 | | |
| SCHEMATIC/LOCATION PROGRAMMER PN 255 (J5, J6) | | |
| Keytek INSTRUMENT CORP. | | 42-431-141 A |

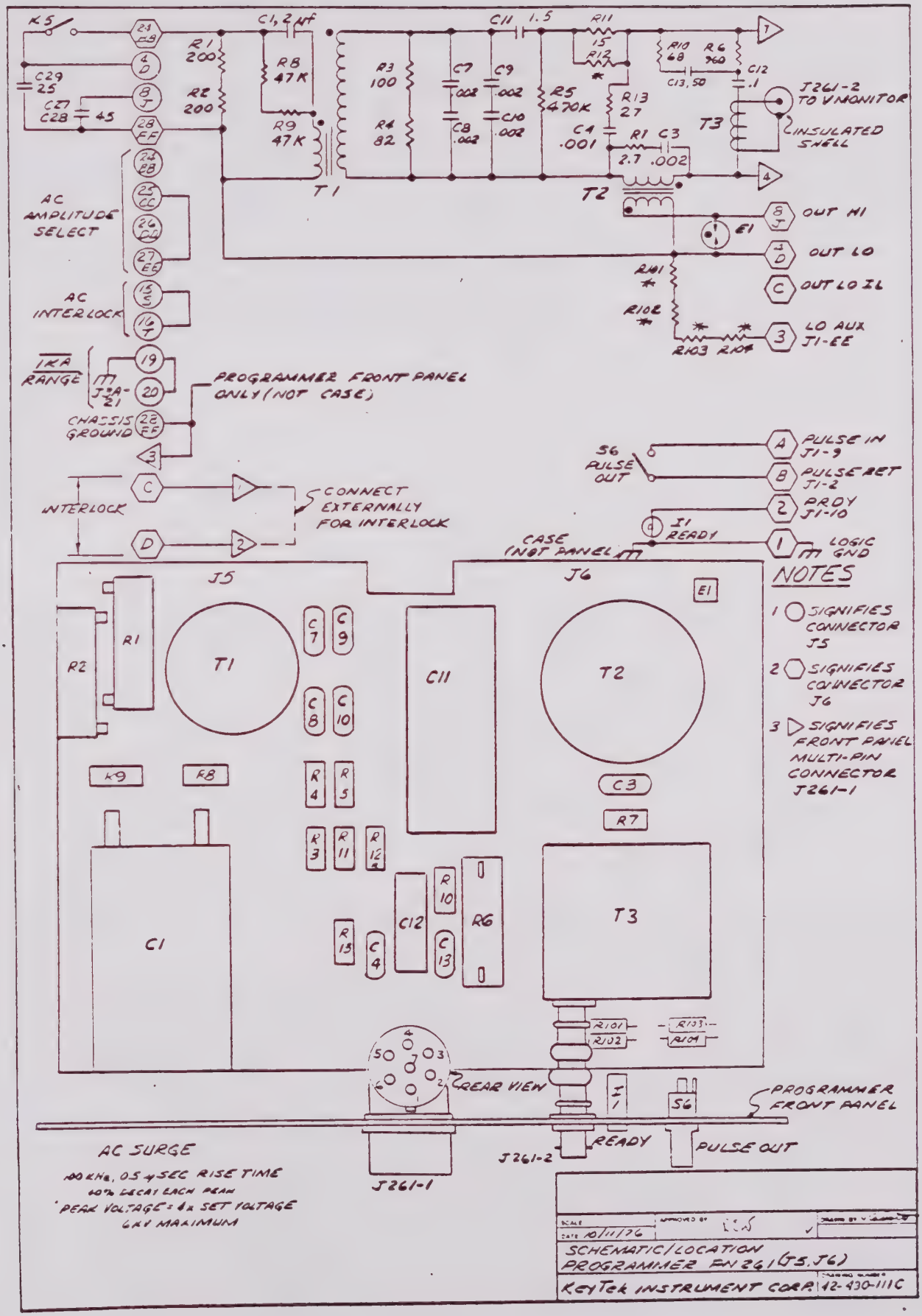
K5
C1, 2 mf
C11 1.5
R11 15
R12
R10 68
R6 760
C12 .1
C13, 50
J261-2 TO V MONITOR
INSULATED SHELL
T3
R1 200
R2 200
R8 47K
R9 47K
T1
R3 100
R4 82
C7 .002
C8 .002
C9 .002
C10 .002
R5 470K
R13 27
C4 .001
R1 C3 2.7 .002
T2
C29 25
C27 C28 45
AC AMPLITUDE SELECT
AC INTERLOCK
OUT HI
E1
OUT LO
OUT LO IL
R101
R102
R103 R104
LO AUX J1-EE
IKA RANGE
PROGRAMMER FRONT PANEL ONLY (NOT CASE)
CHASSIS GROUND
INTERLOCK
CONNECT EXTERNALLY FOR INTERLOCK
S6 PULSE OUT
PULSE IN J1-9
PULSE RET J1-2
PRDY J1-10
I1 READY
LOGIC GND
CASE (NOT PANEL)
J5
J6
E1
NOTES
1 SIGNIFIES CONNECTOR J5
2 SIGNIFIES CONNECTOR J6
3 SIGNIFIES FRONT PANEL MULTI-PIN CONNECTOR J261-1
R1
R2
C1
K9
K8
C3
R7
REAR VIEW
I1
S6
PROGRAMMER FRONT PANEL
READY
PULSE OUT
J261-2
J261-1
AC SURGE
400 Hz, 0.5 μSEC RISE TIME
40% DECAY EACH PEAK
PEAK VOLTAGE = 4x SET VOLTAGE
6 KV MAXIMUM
SCHEMATIC/LOCATION
PROGRAMMER PN 261 (J5, J6)
KEYTEK INSTRUMENT CORP.
12-430-111C

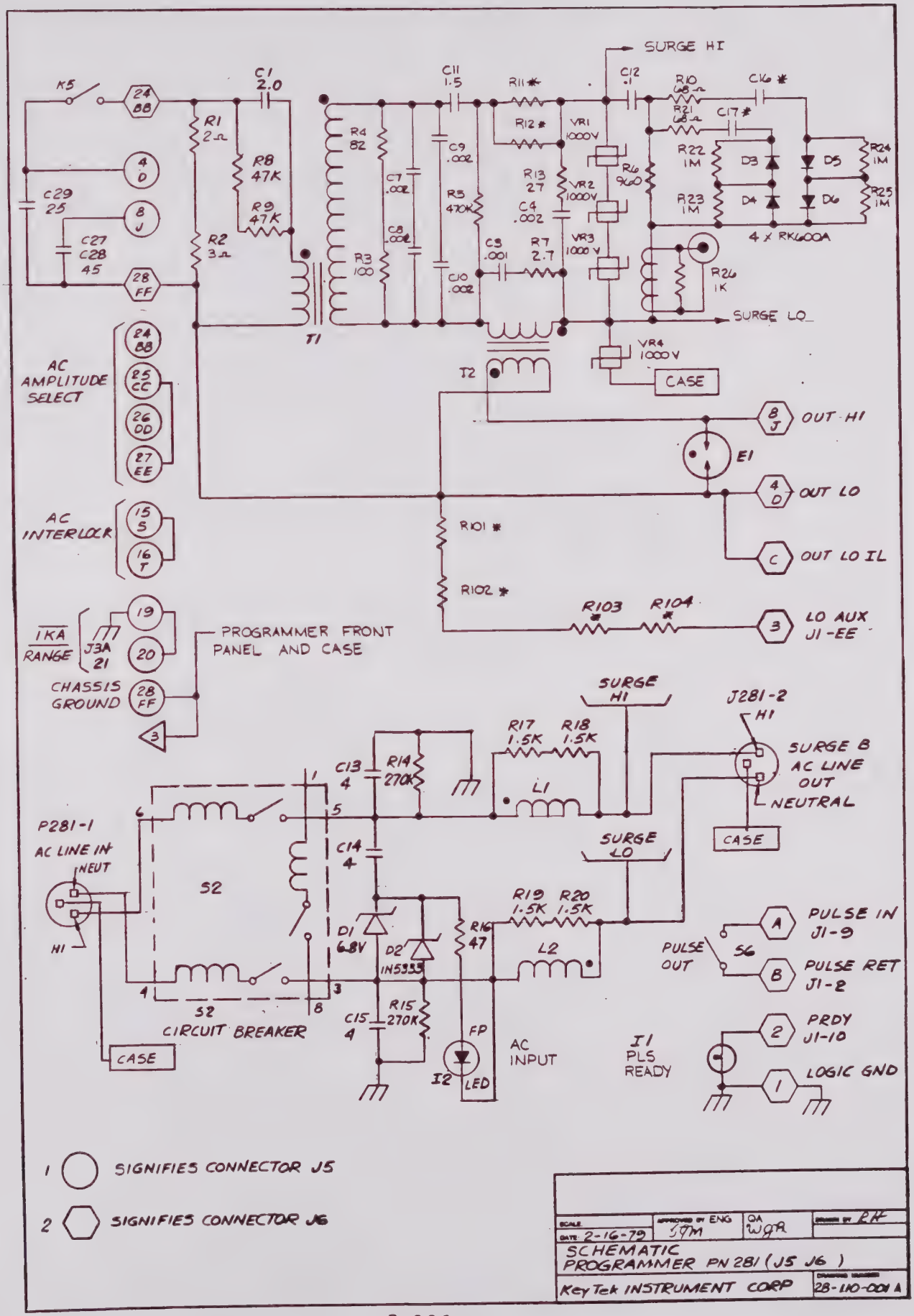
SURGE HI
K5
C1 2.0
C11 1.5
R11*
C12 .1
R10
C16*
R21
C17*
R1 2Ω
R8 47K
R9 47K
R2 3Ω
R4 82
R3 100
C7 .002
C8 .002
C9 .002
R5 470K
C10 .002
R12*
VR1 1000V
R13 27
VR2 1000V
C4 .002
C6 .001
R7 2.7
VR3 1000V
R6 960
R22 1M
R23 1M
D3
D4
D5
D6
R24 1M
R25 1M
4 X RK6000A
R26 1K
C29 25
C27 C28 45
T1
SURGE LO
VR4 1000V
CASE
T2
AC AMPLITUDE SELECT
24 BB
25 CC
26 DD
27 EE
OUT HI
E1
OUT LO
AC INTERLOCK
15 S
16 T
OUT LO IL
R101*
R102*
R103*
R104*
LO AUX J1-EE
IKA RANGE
J3A 21
19
20
PROGRAMMER FRONT PANEL AND CASE
CHASSIS GROUND
28 FF
3
SURGE HI
J281-2 HI
R17 1.5K
R18 1.5K
C13 4
R14 270K
L1
SURGE B AC LINE OUT
NEUTRAL
CASE
P281-1 AC LINE IN
NEUT
HI
S2
C14 4
SURGE LO
R19 1.5K
R20 1.5K
D1 6.8V
D2 IN5335
R16 47
L2
PULSE IN J1-9
PULSE OUT
S6
PULSE RET J1-2
S2 CIRCUIT BREAKER
C15 4
R15 270K
FP
I2 LED
AC INPUT
CASE
I1 PLS READY
PRDY J1-10
LOGIC GND
1 SIGNIFIES CONNECTOR J5
2 SIGNIFIES CONNECTOR J6
SCALE
DATE 2-16-79
APPROVED BY ENG JM
QA WQA
DRAWN BY RK
SCHEMATIC PROGRAMMER PN 281 (J5 J6)
KeyTek INSTRUMENT CORP
DRAWING NUMBER 28-110-0001 A

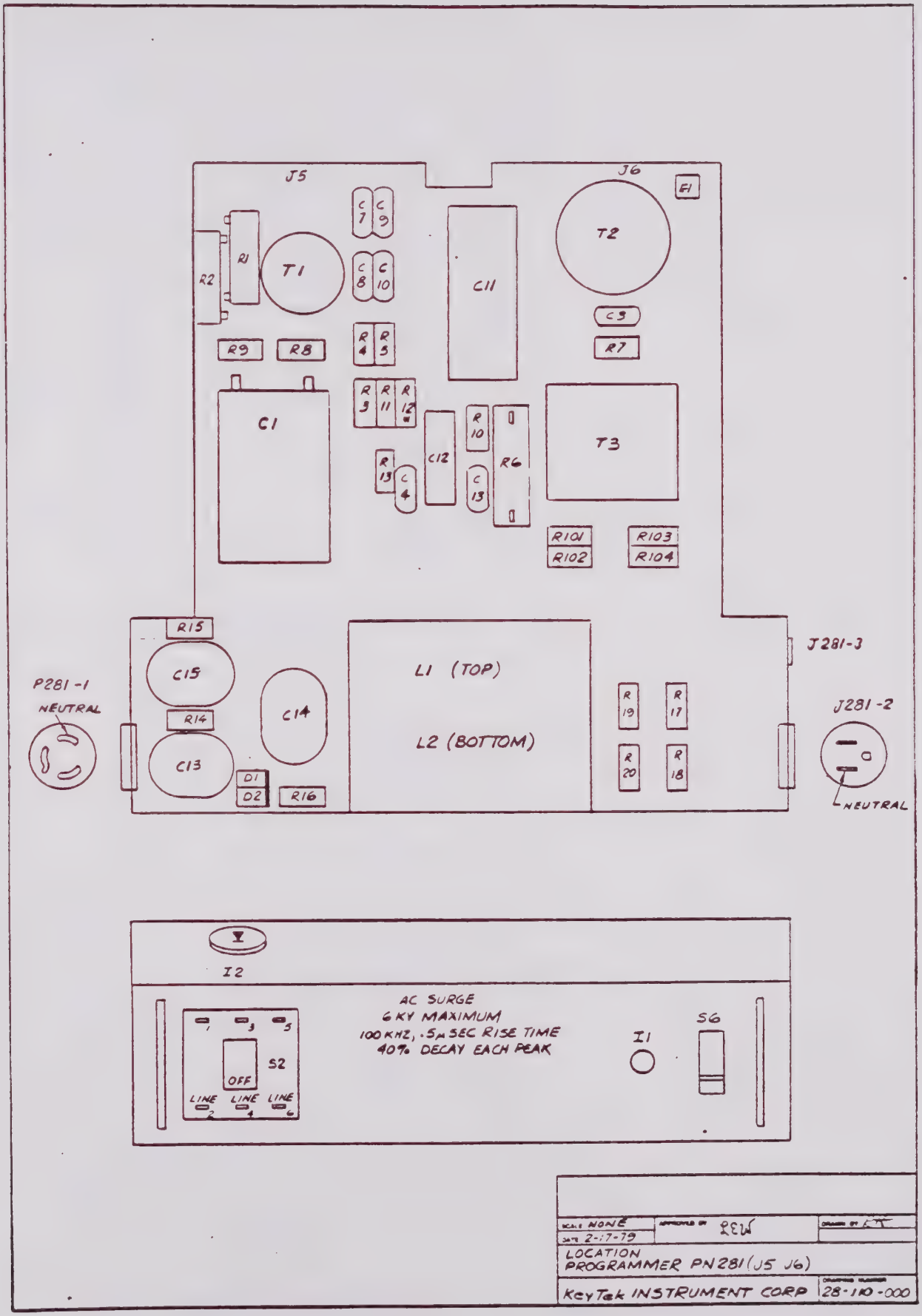
J5
J6
F1
T2
C7
C9
R1
R2
T1
C8
C10
C11
C3
R7
R9
R8
R4
R5
R3
R11
R12
C1
R10
R6
T3
C12
R13
C4
C13
R101
R102
R103
R104
R15
C15
L1 (TOP)
J281-3
P281-1
NEUTRAL
R14
C14
R19
R17
J281-2
L2 (BOTTOM)
C13
R20
R18
D1
D2
R16
NEUTRAL
I2
AC SURGE
6 KV MAXIMUM
100 KHZ, .5μ SEC RISE TIME
40% DECAY EACH PEAK
S6
I1
S2
OFF
LINE
LINE
LINE
SCALE NONE
DATE 2-17-79
LOCATION
PROGRAMMER PN281 (J5 J6)
KeyTek INSTRUMENT CORP
28-110-000

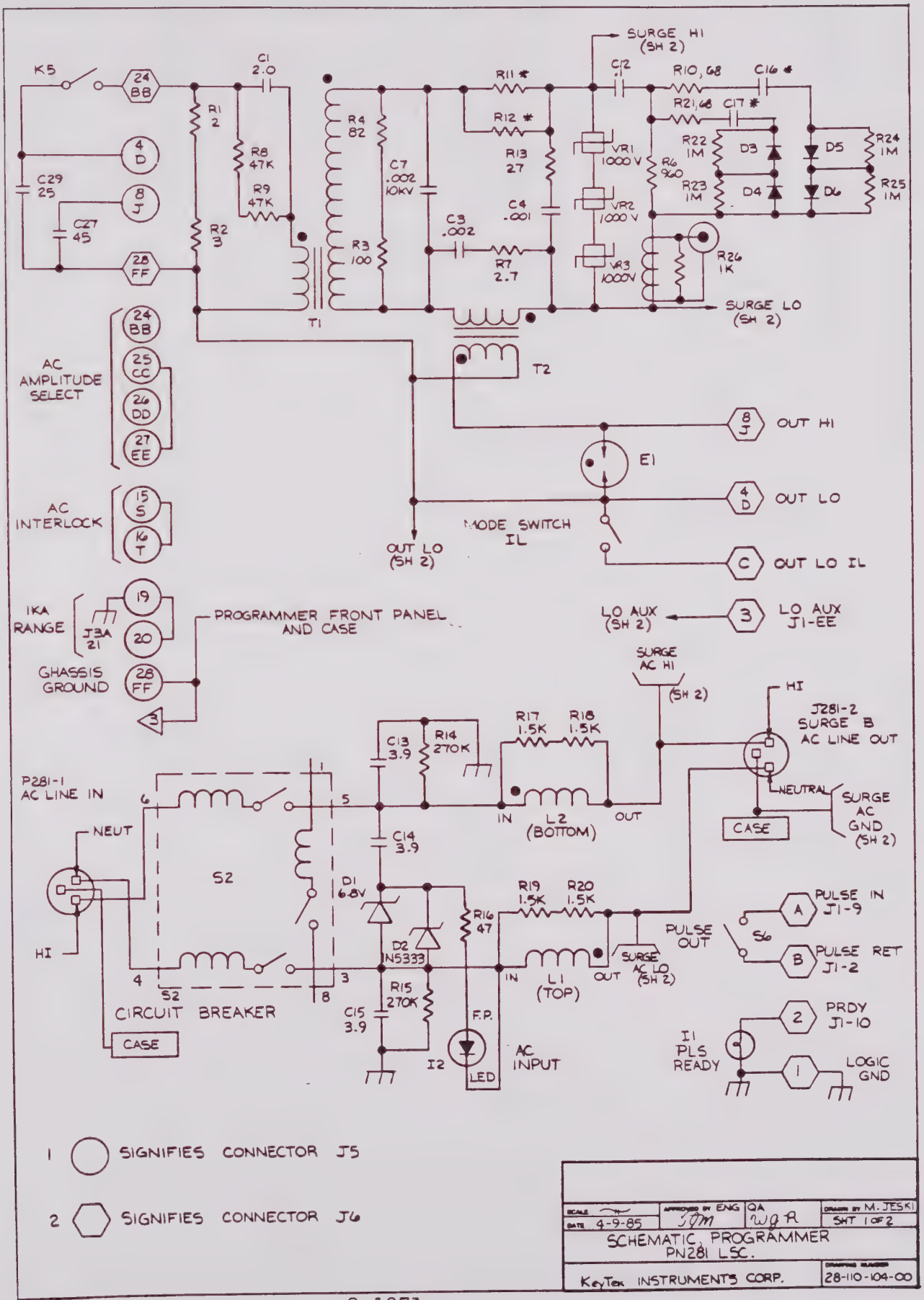
K5
24 BB
C1 2.0
R1 2
R8 47K
R9 47K
R2 3
4 D
8 J
28 FF
C29 25
C27 45
R4 82
R3 100
C7 .002 10KV
C3 .002
R7 2.7
R11 *
R12 *
R13 27
C4 .001
C12 .1
VR1 1000 V
VR2 1000 V
VR3 1000V
R6 960
R10, 68
C16 *
R21, 68
C17 *
R22 1M
R23 1M
D3
D4
D5
D6
R24 1M
R25 1M
R26 1K
SURGE HI (SH 2)
SURGE LO (SH 2)
T1
T2
AC AMPLITUDE SELECT
24 BB
25 CC
26 DD
27 EE
AC INTERLOCK
15 S
16 T
8 J
OUT HI
E1
4 D
OUT LO
MODE SWITCH IL
C
OUT LO IL
OUT LO (SH 2)
IKA RANGE
J3A 21
19
20
GHASSIS GROUND
28 FF
3
PROGRAMMER FRONT PANEL AND CASE
LO AUX (SH 2)
LO AUX J1-EE
SURGE AC HI (SH 2)
HI
J281-2 SURGE B AC LINE OUT
NEUTRAL
CASE
SURGE AC GND (SH 2)
P281-1 AC LINE IN
NEUT
HI
S2
CIRCUIT BREAKER
C13 3.9
R14 270K
R17 1.5K
R18 1.5K
IN
L2 (BOTTOM)
OUT
C14 3.9
D1 6.8V
D2 IN5333
R16 47
R19 1.5K
R20 1.5K
PULSE OUT
S6
A
PULSE IN J1-9
B
PULSE RET J1-2
SURGE AC LO (SH 2)
L1 (TOP)
R15 270K
C15 3.9
F.P.
I2
LED
AC INPUT
I1 PLS READY
2
PRDY J1-10
1
LOGIC GND
1 SIGNIFIES CONNECTOR J5
2 SIGNIFIES CONNECTOR J6
SCALE
DATE 4-9-85
APPROVED BY ENG
QA
DRAWN BY M. JESKI
SHT 1 OF 2
SCHEMATIC, PROGRAMMER PN281 LSC.
KeyTek INSTRUMENTS CORP.
DRAWING NUMBER 28-110-104-00

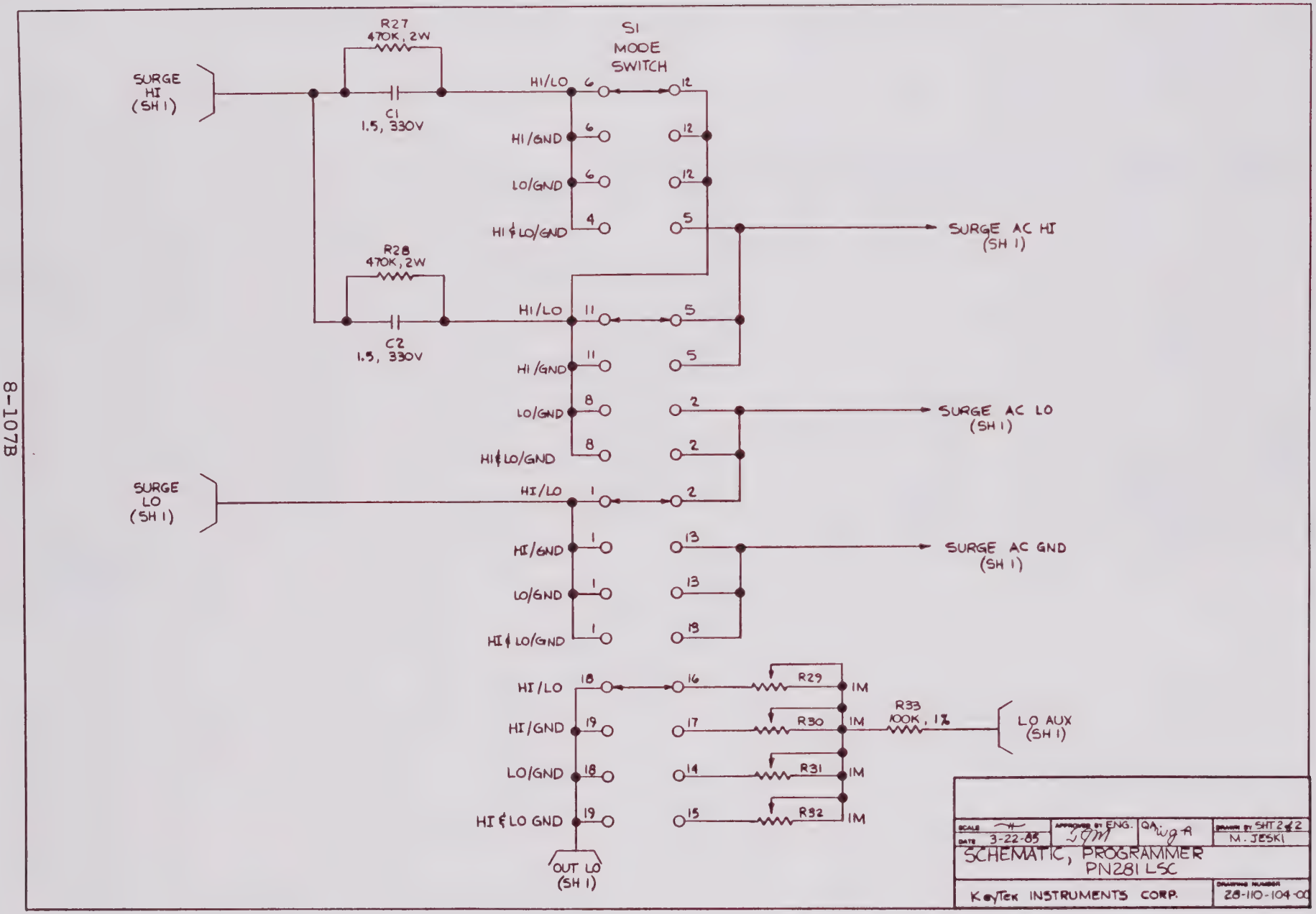
R27
470K, 2W
C1
1.5, 330V
SURGE HI (SH 1)
S1
MODE SWITCH
HI/LO
HI/GND
LO/GND
HI & LO/GND
SURGE AC HI (SH 1)
R28
470K, 2W
C2
1.5, 330V
SURGE AC LO (SH 1)
SURGE LO (SH 1)
SURGE AC GND (SH 1)
R29
R30
R31
R32
R33
100K, 1%
IM
LO AUX (SH 1)
OUT LO (SH 1)
SCALE
DATE 3-22-85
APPROVED BY ENG.
QA
DRAWN BY M. JESKI
SHT 2 of 2
SCHEMATIC, PROGRAMMER PN281 LSC
KeyTek INSTRUMENTS CORP.
DRAWING NUMBER 28-110-104-00

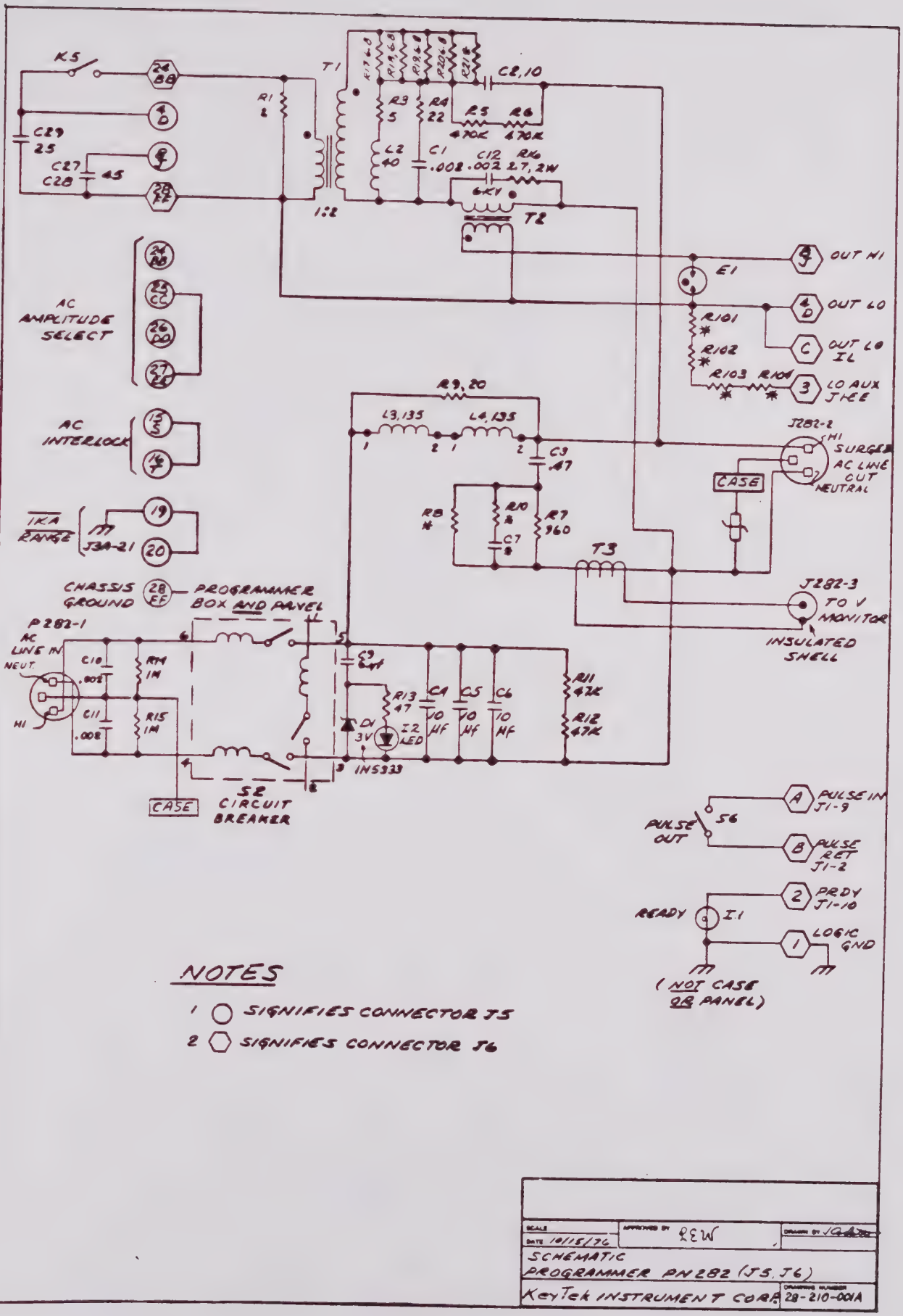


## NOTES

1 ○ SIGNIFIES CONNECTOR J5

2 ⬡ SIGNIFIES CONNECTOR J6

| | | |
|---|---|---|
| SCALE | APPROVED BY RSW | DRAWN BY |
| DATE 10/15/76 | | |
| SCHEMATIC PROGRAMMER PN 282 (J5, J6) | | |
| KeyTek INSTRUMENT CORP. | | DRAWING NUMBER 28-210-001A |

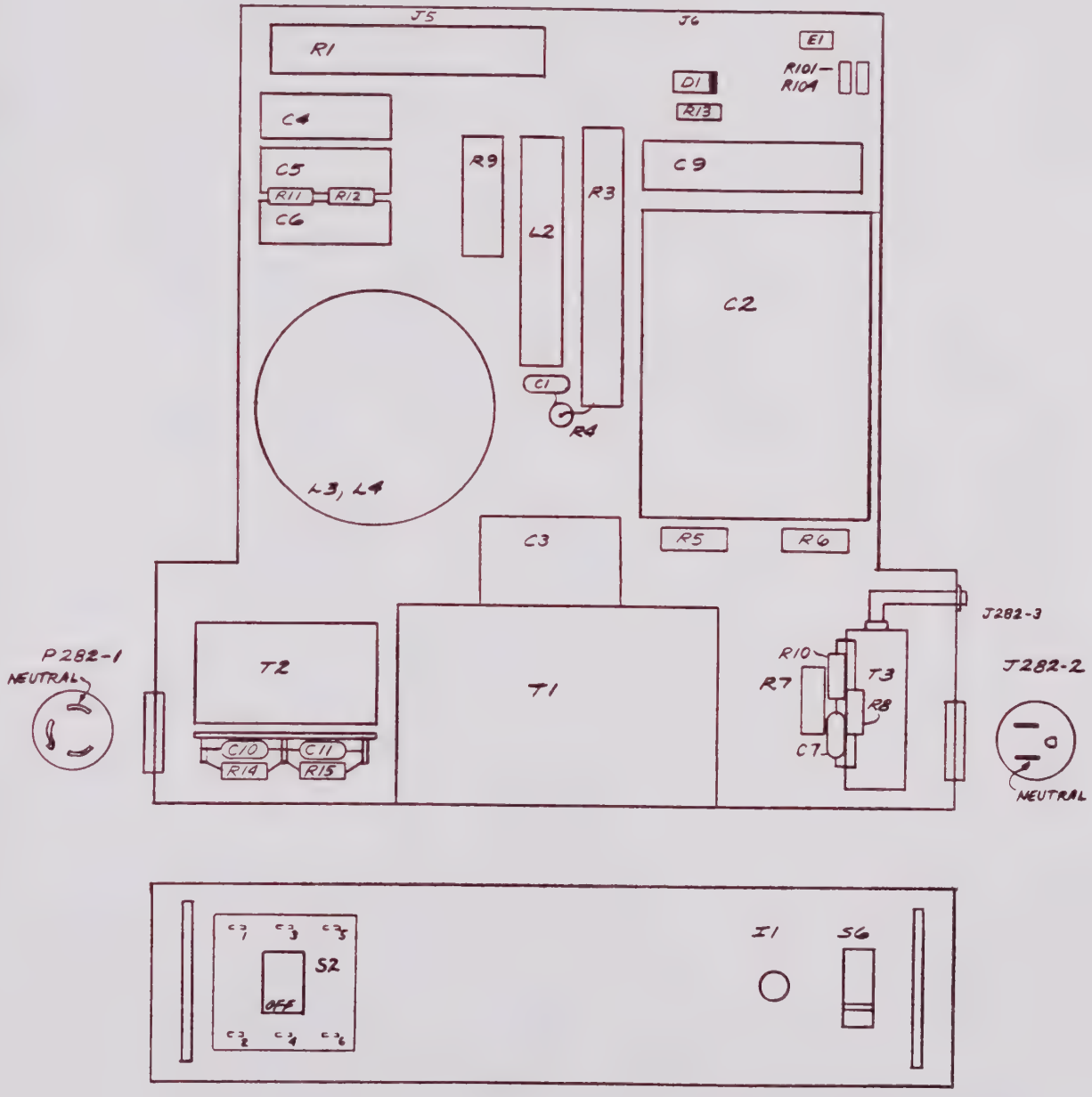


< 2 x > 10 WAVE
2.5KV MAX
1000A MIN

| | | |
|---|---|---|
| SCALE | APPROVED BY RWS | DRAWN BY BH |
| DATE 2/9/77 | | |
| LOCATION | | |
| PROGRAMMER PN 282 (J5, J6) | | |
| KeyTek INSTRUMENT CORP. | | DRAWING NUMBER 28-210-000 |

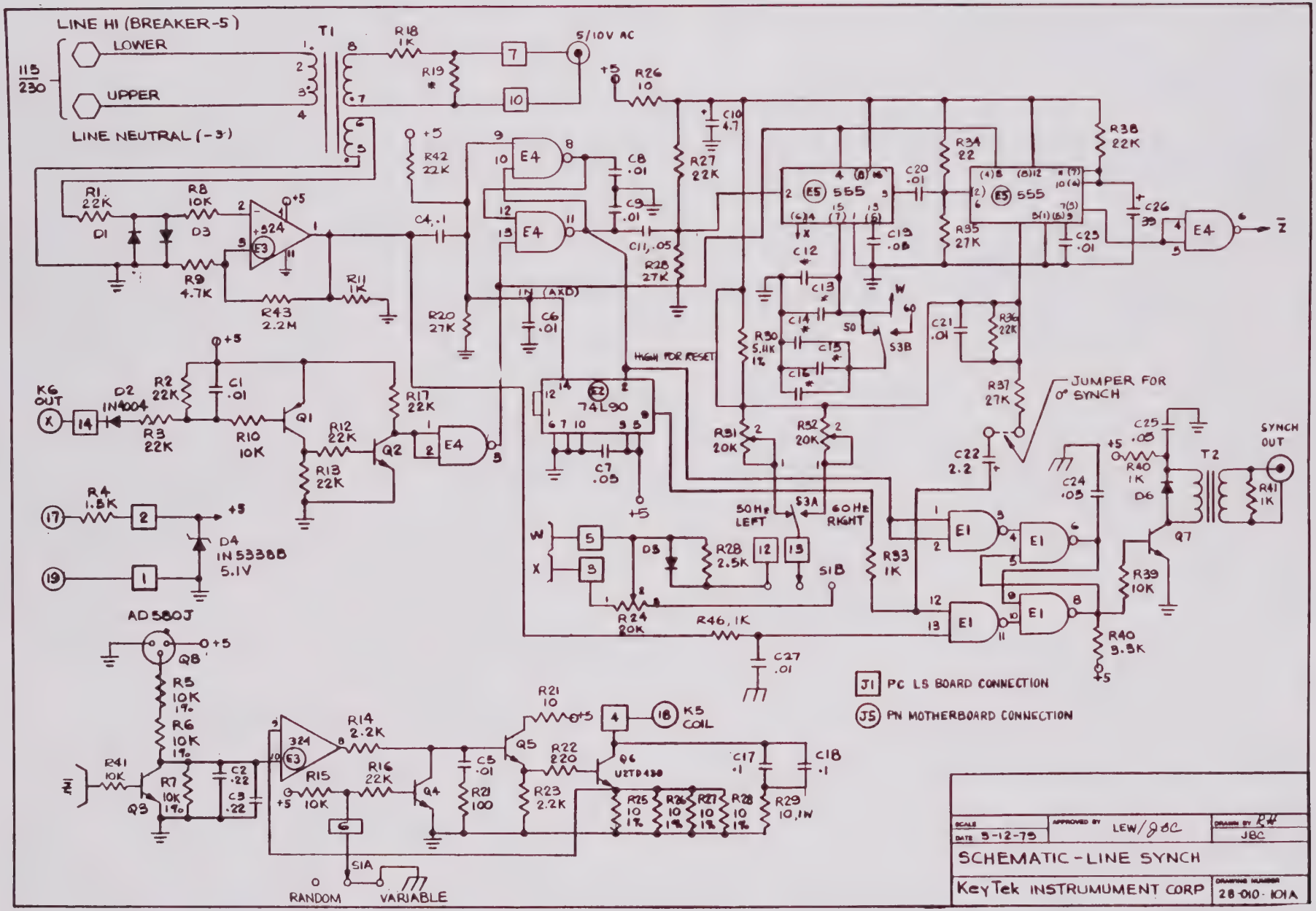
LINE HI (BREAKER-5)
LOWER
UPPER
LINE NEUTRAL (-5)
115
230
T1
R18 1K
R19 *
5/10V AC
+5
R26 10
C10 4.7
R27 22K
R38 22K
R34 22
R35 27K
C20 .01
C26 39
C25 .01
C19 .08
C12
C13
C14 *
C15 *
C16 *
S0
S3B
W
X
R30 5.11K 1%
R31 20K
R32 20K
R36 22K
C21 .01
R37 27K
JUMPER FOR 0° SYNCH
C22 2.2
R42 22K
C4 .1
C8 .01
C9 .01
C11 .05
R28 27K
IN (AXD)
R20 27K
C6 .01
HIGH FOR RESET
74L90
C7 .05
50Hz LEFT
S3A
60Hz RIGHT
S1B
R33 1K
R24 20K
R46, 1K
C27 .01
R1 22K
R8 10K
D1
D3
R9 4.7K
R43 2.2M
R11 1K
K6 OUT
D2 IN4004
R2 22K
C1 .01
R3 22K
R10 10K
Q1
Q2
R12 22K
R13 22K
R17 22K
R4 1.5K
D4 IN5338B 5.1V
AD580J
Q8
R5 10K 1%
R6 10K 1%
R41 10K
R7 10K 1%
Q3
C2 .22
C3 .22
R14 2.2K
R15 10K
R16 22K
Q4
C5 .01
R21 100
R21 10
Q5
R22 220
R23 2.2K
Q6 UZTD430
R25 10 1%
R26 10 1%
R27 10 1%
R28 10 1%
C17 .1
C18 .1
R29 10, 1W
K5 COIL
SIA
RANDOM
VARIABLE
C25 .05
R40 1K
D6
T2
SYNCH OUT
R41 1K
Q7
R39 10K
R40 3.5K
J1 PC LS BOARD CONNECTION
J5 PN MOTHERBOARD CONNECTION
SCALE
DATE 9-12-79
APPROVED BY LEW/JBC
DRAWN BY RW
JBC
SCHEMATIC - LINE SYNCH
KeyTek INSTRUMUMENT CORP
DRAWING NUMBER 28-010-101A

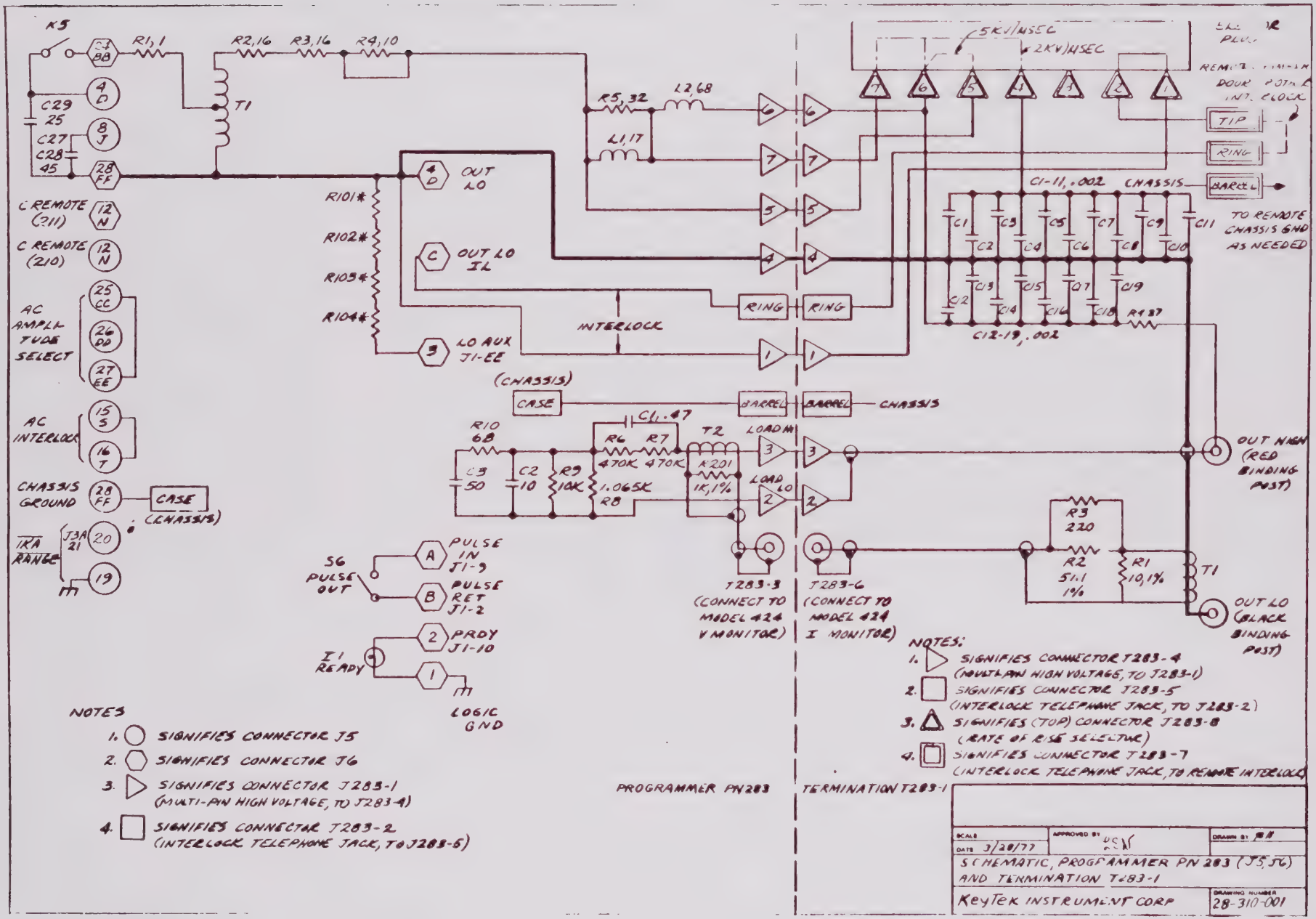
K5
R1,1
R2,16
R3,16
R4,10
T1
C29 25
C27 C28 45
C REMOTE (211)
C REMOTE (210)
AC AMPLITUDE SELECT
AC INTERLOCK
CHASSIS GROUND
CASE (CHASSIS)
IRA RANGE
R101*
R102*
R103*
R104*
OUT LO
OUT LO IL
LO AUX J1-EE
INTERLOCK
R5,32
L2,68
L1,17
5KV/MSEC
2KV/MSEC
TIP
RING
BARREL
C1-11, .002
CHASSIS
TO REMOTE CHASSIS GND AS NEEDED
C12-19, .002
R437
(CHASSIS)
CASE
BARREL
CHASSIS
C4, .47
R10 6B
C3 50
C2 10
R9 10K
R6 470K
R7 470K
R8 1.065K
T2
K201 1K, 1%
LOAD HI
LOAD LO
OUT HIGH (RED BINDING POST)
R3 220
R2 51.1 1%
R1 10,1%
OUT LO (BLACK BINDING POST)
SG PULSE OUT
PULSE IN J1-9
PULSE RET J1-2
I1 READY
PRDY J1-10
LOGIC GND
T283-3 (CONNECT TO MODEL 424 V MONITOR)
T283-6 (CONNECT TO MODEL 424 I MONITOR)
NOTES:
1. SIGNIFIES CONNECTOR T283-4 (MULTI-PIN HIGH VOLTAGE, TO J283-1)
2. SIGNIFIES CONNECTOR T283-5 (INTERLOCK TELEPHONE JACK, TO J283-2)
3. SIGNIFIES (TOP) CONNECTOR T283-8 (RATE OF RISE SELECTOR)
4. SIGNIFIES CONNECTOR T283-7 (INTERLOCK TELEPHONE JACK, TO REMOTE INTERLOCK)
NOTES
1. SIGNIFIES CONNECTOR J5
2. SIGNIFIES CONNECTOR J6
3. SIGNIFIES CONNECTOR T283-1 (MULTI-PIN HIGH VOLTAGE, TO J283-4)
4. SIGNIFIES CONNECTOR T283-2 (INTERLOCK TELEPHONE JACK, TO J283-5)
PROGRAMMER PN283
TERMINATION T283-1
SCALE
APPROVED BY
DRAWN BY
DATE 3/28/77
SCHEMATIC, PROGRAMMER PN 283 (J5, J6) AND TERMINATION T283-1
KeyTek INSTRUMENT CORP
DRAWING NUMBER 28-310-001

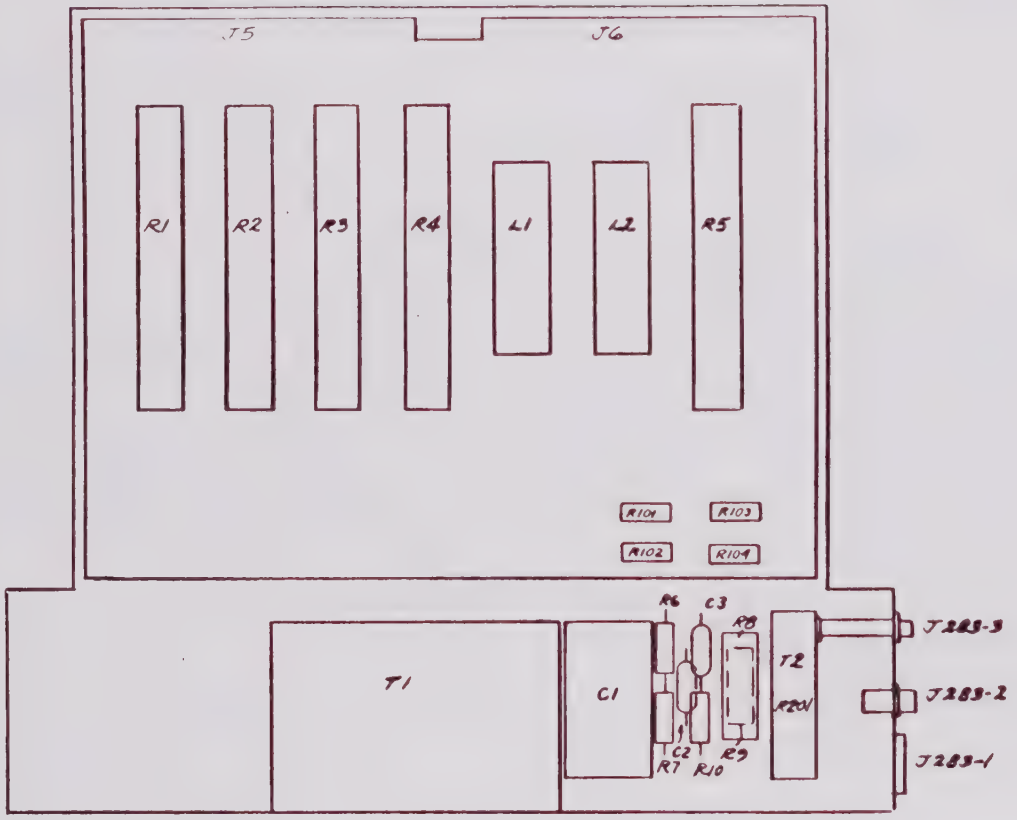


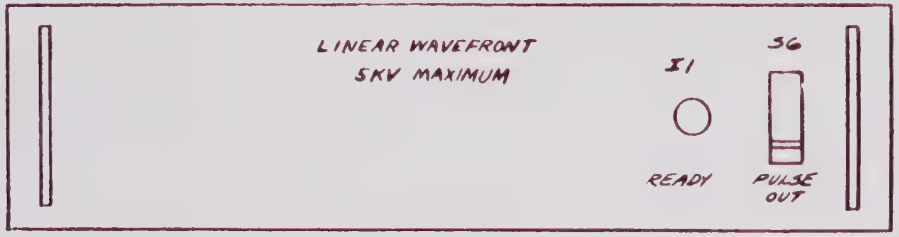


| | | |
|---|---|---|
| SCALE | APPROVED BY REW | DRAWN BY BA |
| DATE 3/28/77 | | |
| LOCATION PROGRAMMER PN 283 (J5,J6) | | |
| KeyTek INSTRUMENT CORP. | | DRAWING NUMBER 28-310-000 |

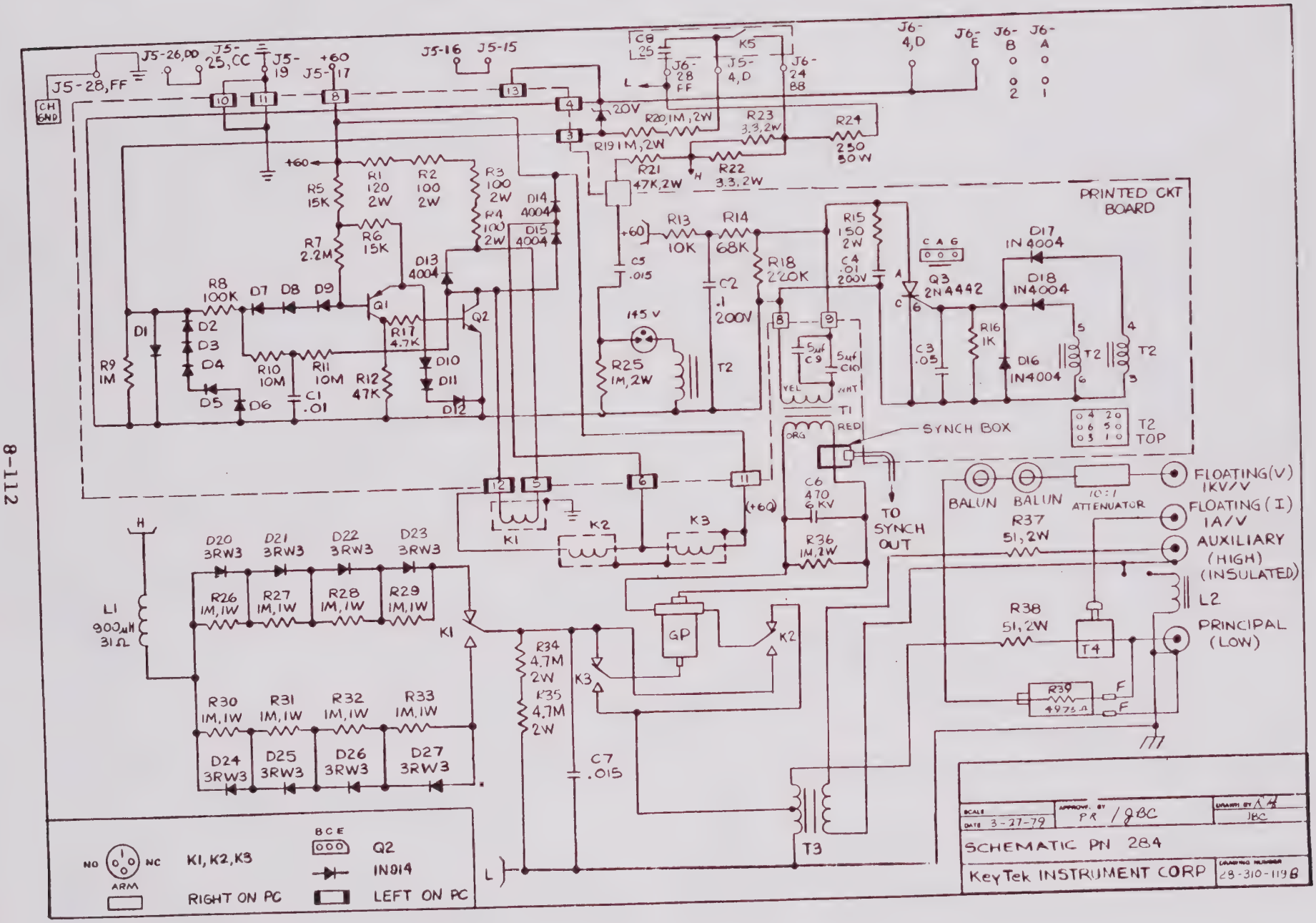
J5-28,FF
J5-26,DD
J5-25,CC
J5-19
J5-17
+60
J5-16
J5-15
CH GND
C8 25
K5
J6-28 FF
J5-4,D
J6-24 88
J6-4,D
J6-E
J6-B
J6-A
20V
R20 1M,2W
R19 1M,2W
R23 3.3,2W
R24 250 50W
R21 47K,2W
R22 3.3,2W
R1 120 2W
R2 100 2W
R3 100 2W
R4 100 2W
R5 15K
R6 15K
R7 2.2M
R8 100K
R9 1M
R10 10M
R11 10M
R12 47K
R13 10K
R14 68K
R15 150 2W
R16 1K
R17 4.7K
R18 220K
R25 1M,2W
C1 .01
C2 .1 200V
C3 .05
C4 .01 200V
C5 .015
C6 470 6KV
C7 .015
C8 .25
C9 5uf
C10 5uf
D1
D2
D3
D4
D5
D6
D7
D8
D9
D10
D11
D12
D13 4004
D14 4004
D15 4004
D16 1N4004
D17 1N4004
D18 1N4004
Q1
Q2
Q3 2N4442
145 V
T1
T2
T3
T4
PRINTED CKT BOARD
SYNCH BOX
TO SYNCH OUT
T2 TOP
BALUN
BALUN
10:1 ATTENUATOR
FLOATING(V) 1KV/V
FLOATING (I) 1A/V
AUXILIARY (HIGH) (INSULATED)
PRINCIPAL (LOW)
R37 51,2W
R38 51,2W
R39 4975Ω
L2
K1
K2
K3
GP
L1 900μH 31Ω
D20 3RW3
D21 3RW3
D22 3RW3
D23 3RW3
D24 3RW3
D25 3RW3
D26 3RW3
D27 3RW3
R26 1M,1W
R27 1M,1W
R28 1M,1W
R29 1M,1W
R30 1M,1W
R31 1M,1W
R32 1M,1W
R33 1M,1W
R34 4.7M 2W
R35 4.7M 2W
NO
NC
ARM
K1, K2, K3
RIGHT ON PC
BCE
Q2
IN914
LEFT ON PC
SCALE
DATE 3-27-79
APPROVED BY PR / JBC
DRAWN BY JBC
SCHEMATIC PN 284
KeyTek INSTRUMENT CORP
DRAWING NUMBER 28-310-119B

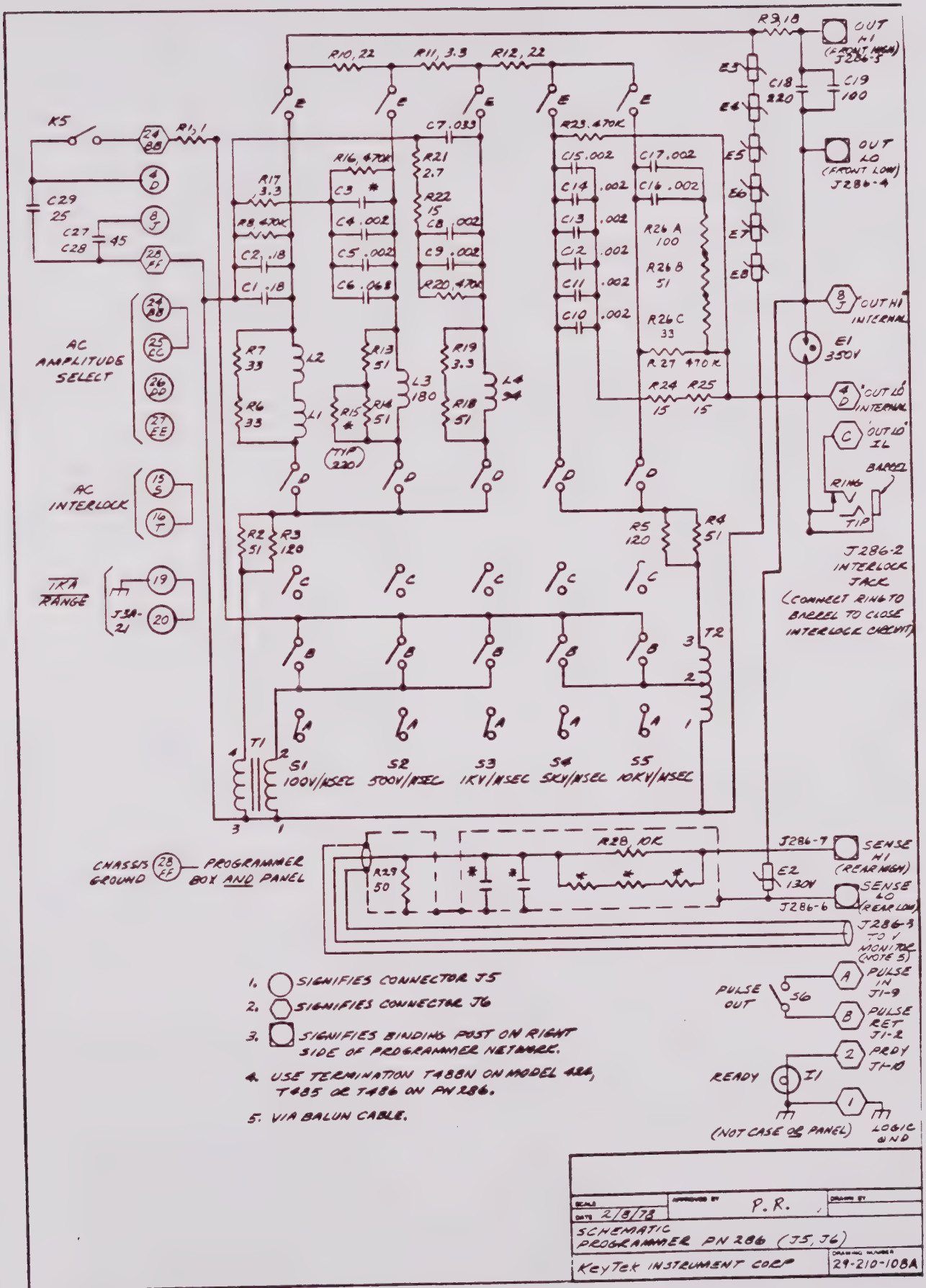


1. ○ SIGNIFIES CONNECTOR J5
2. ⬡ SIGNIFIES CONNECTOR J6
3. □ SIGNIFIES BINDING POST ON RIGHT SIDE OF PROGRAMMER NETWORK.
4. USE TERMINATION T488N ON MODEL 424, T485 OR T486 ON PN 286.
5. VIA BALUN CABLE.

| | | |
|---|---|---|
| SCALE | APPROVED BY P.R. | DRAWN BY |
| DATE 2/8/78 | | |
| SCHEMATIC PROGRAMMER PN 286 (J5, J6) | | |
| KeyTek INSTRUMENT CORP | | 29-210-108A |

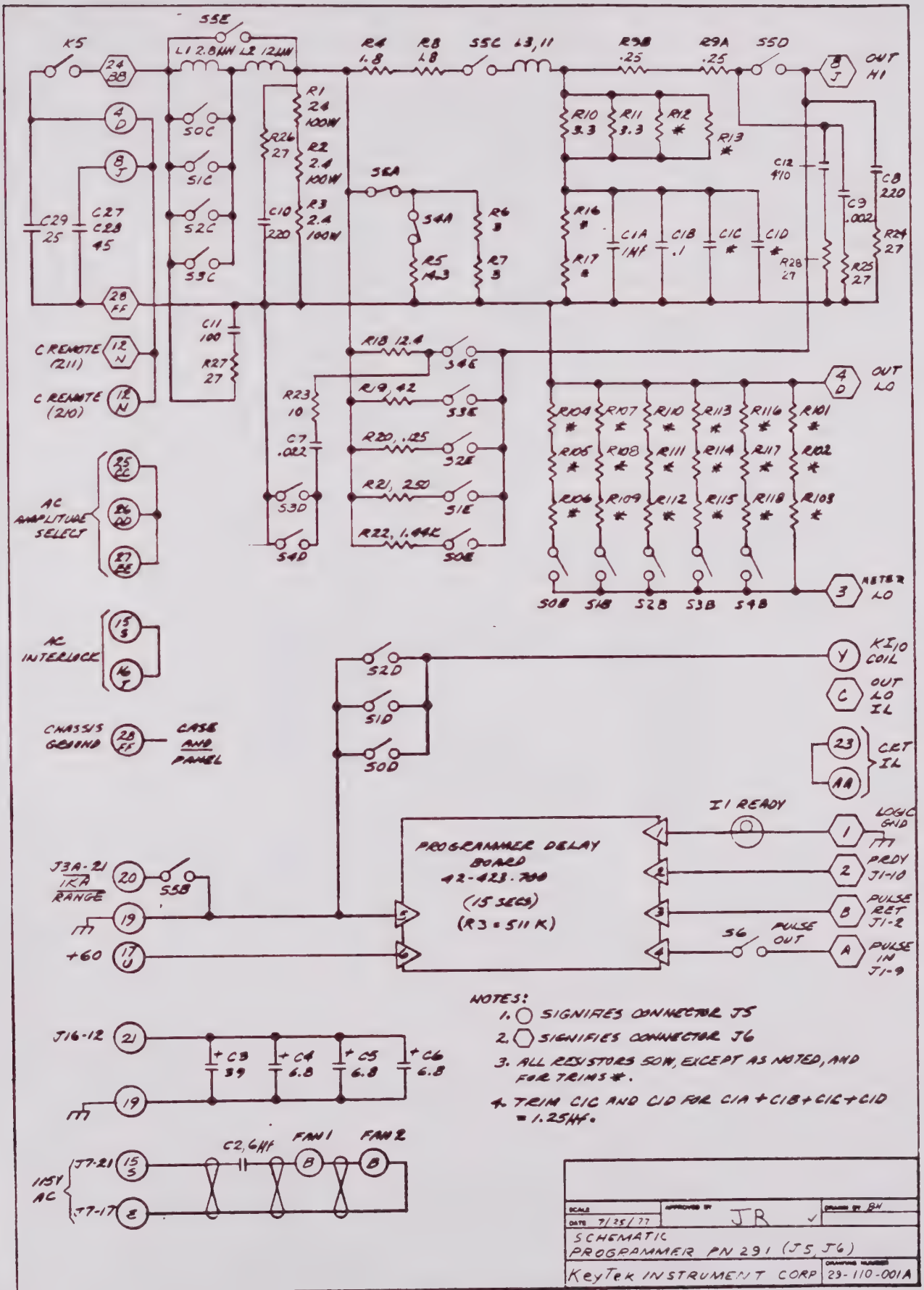


NOTES:

1. ○ SIGNIFIES CONNECTOR J5
2. ⬡ SIGNIFIES CONNECTOR J6
3. ALL RESISTORS 5OW, EXCEPT AS NOTED, AND FOR TRIMS *.
4. TRIM C1C AND C1D FOR C1A + C1B + C1C + C1D = 1.25MF.

| | | |
|---|---|---|
| SCALE | APPROVED BY JR ✓ | DRAWN BY BH |
| DATE 7/25/77 | | |
| SCHEMATIC PROGRAMMER PN 291 (J5 J6) | | |
| KeyTek INSTRUMENT CORP | | DRAWING NUMBER 29-110-001A |

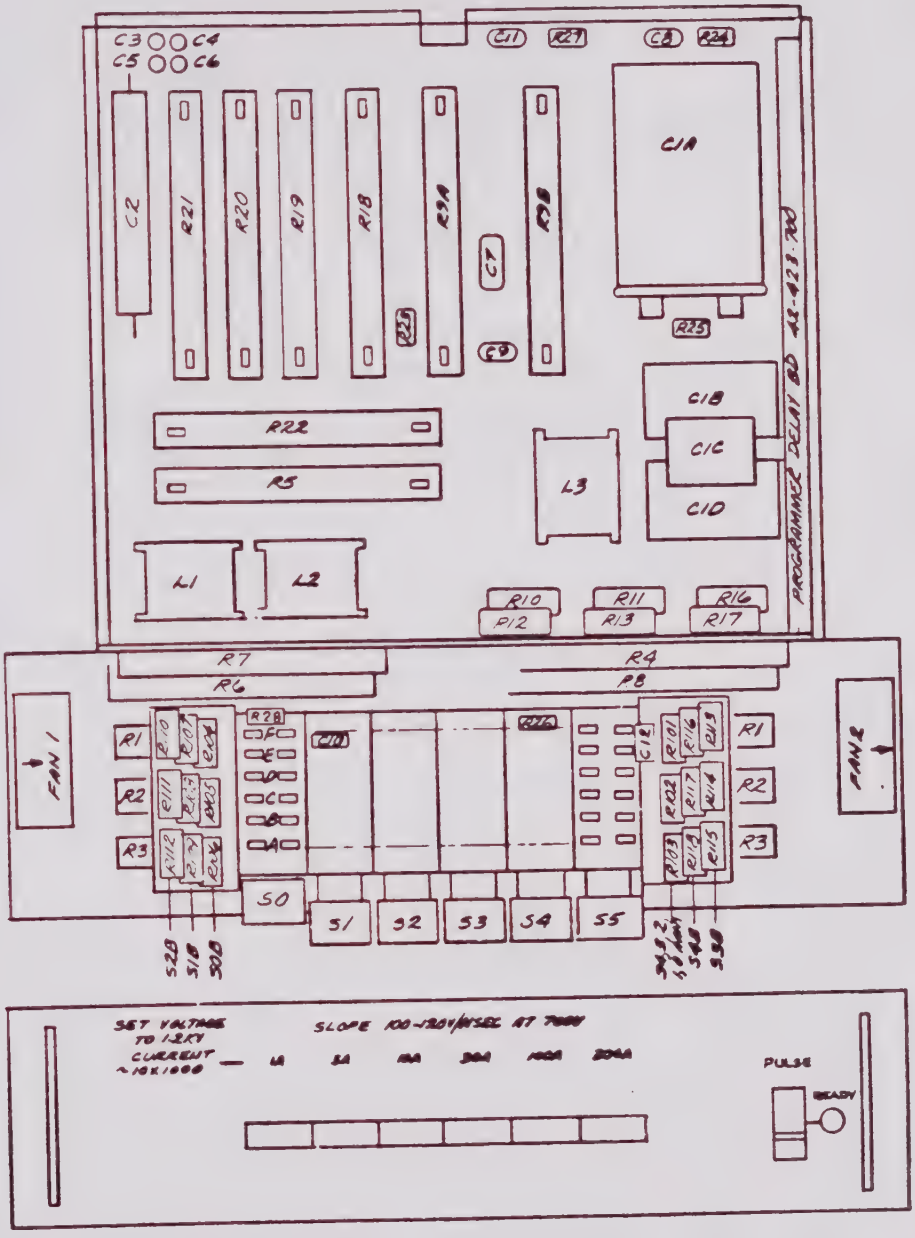


| | | |
|---|---|---|
| SCALE | APPROVED BY | DRAWN BY B H |
| DATE 7/26/11 | | |
| LOCATION | | |
| PROGRAMMER PN 291 (J5, J6) | | |
| KeyTek INSTRUMENT CORP | | 29-110-000A |

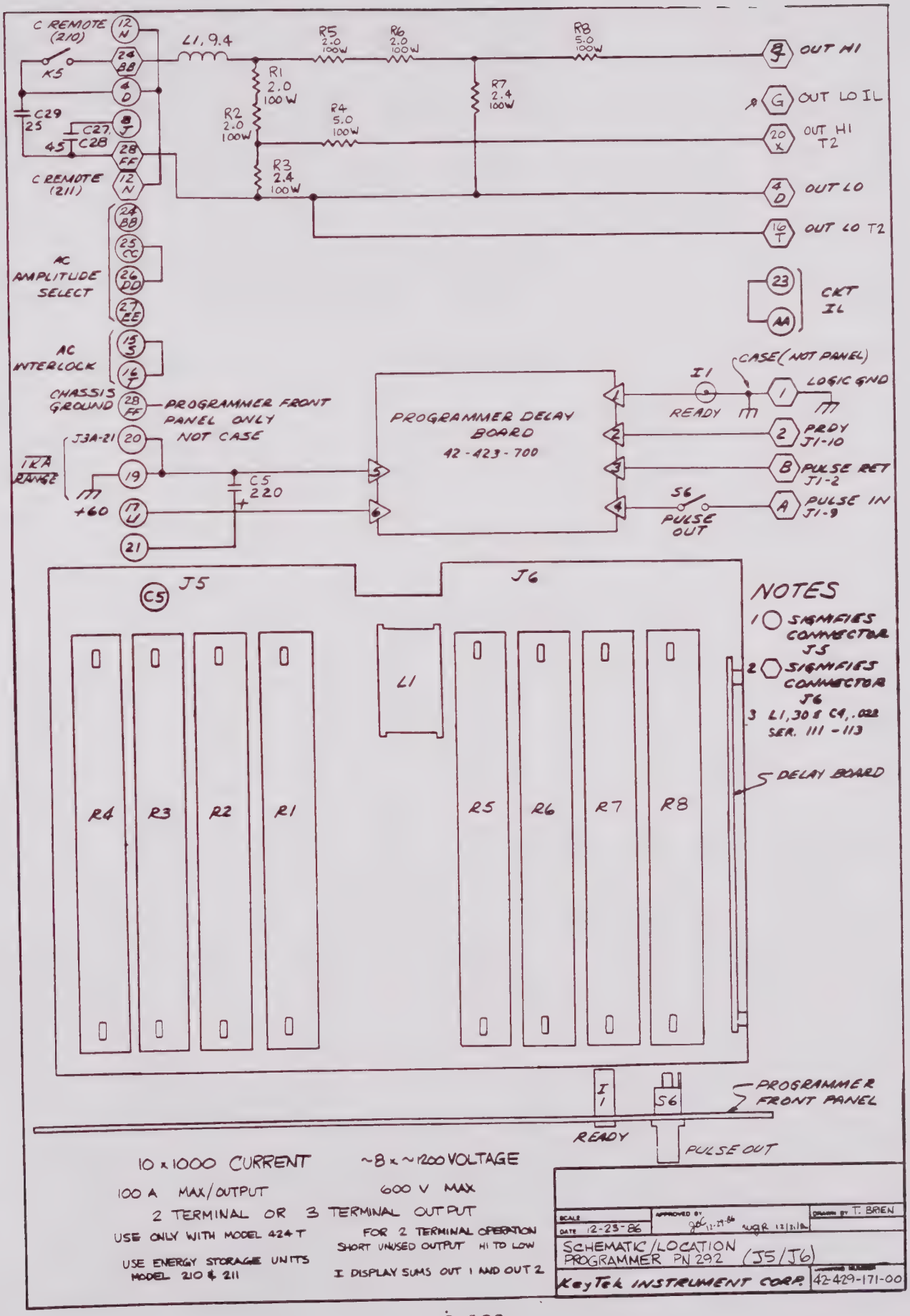
C REMOTE (210)
K5
C29 25
C27 45
C28
C REMOTE (211)
AC AMPLITUDE SELECT
AC INTERLOCK
CHASSIS GROUND
PROGRAMMER FRONT PANEL ONLY NOT CASE
J3A-21
IRA RANGE
+60
L1, 9.4
R1 2.0 100W
R2 2.0 100W
R3 2.4 100W
R4 5.0 100W
R5 2.0 100W
R6 2.0 100W
R7 2.4 100W
R8 5.0 100W
C5 220
PROGRAMMER DELAY BOARD 42-423-700
OUT HI
OUT LO IL
OUT HI T2
OUT LO
OUT LO T2
CKT IL
CASE (NOT PANEL)
I1
READY
LOGIC GND
PRDY J1-10
PULSE RET J1-2
PULSE IN J1-9
S6
PULSE OUT
J5
J6
C5
L1
R4
R3
R2
R1
R5
R6
R7
R8
NOTES
1 SIGNIFIES CONNECTOR J5
2 SIGNIFIES CONNECTOR J6
3 L1, 30 & C9, .022 SER. 111 -113
5 DELAY BOARD
I1
S6
PROGRAMMER FRONT PANEL
READY
PULSE OUT
10 x 1000 CURRENT
100 A MAX/OUTPUT
2 TERMINAL OR 3 TERMINAL OUTPUT
USE ONLY WITH MODEL 424-T
USE ENERGY STORAGE UNITS MODEL 210 & 211
~8 x ~1200 VOLTAGE
600 V MAX
FOR 2 TERMINAL OPERATION SHORT UNUSED OUTPUT HI TO LOW
I DISPLAY SUMS OUT 1 AND OUT 2
SCALE
DATE 12-23-86
APPROVED BY
DRAWN BY T. BREN
SCHEMATIC/LOCATION PROGRAMMER PN 292 (J5/J6)
KayTek INSTRUMENT CORP.
42-429-171-00

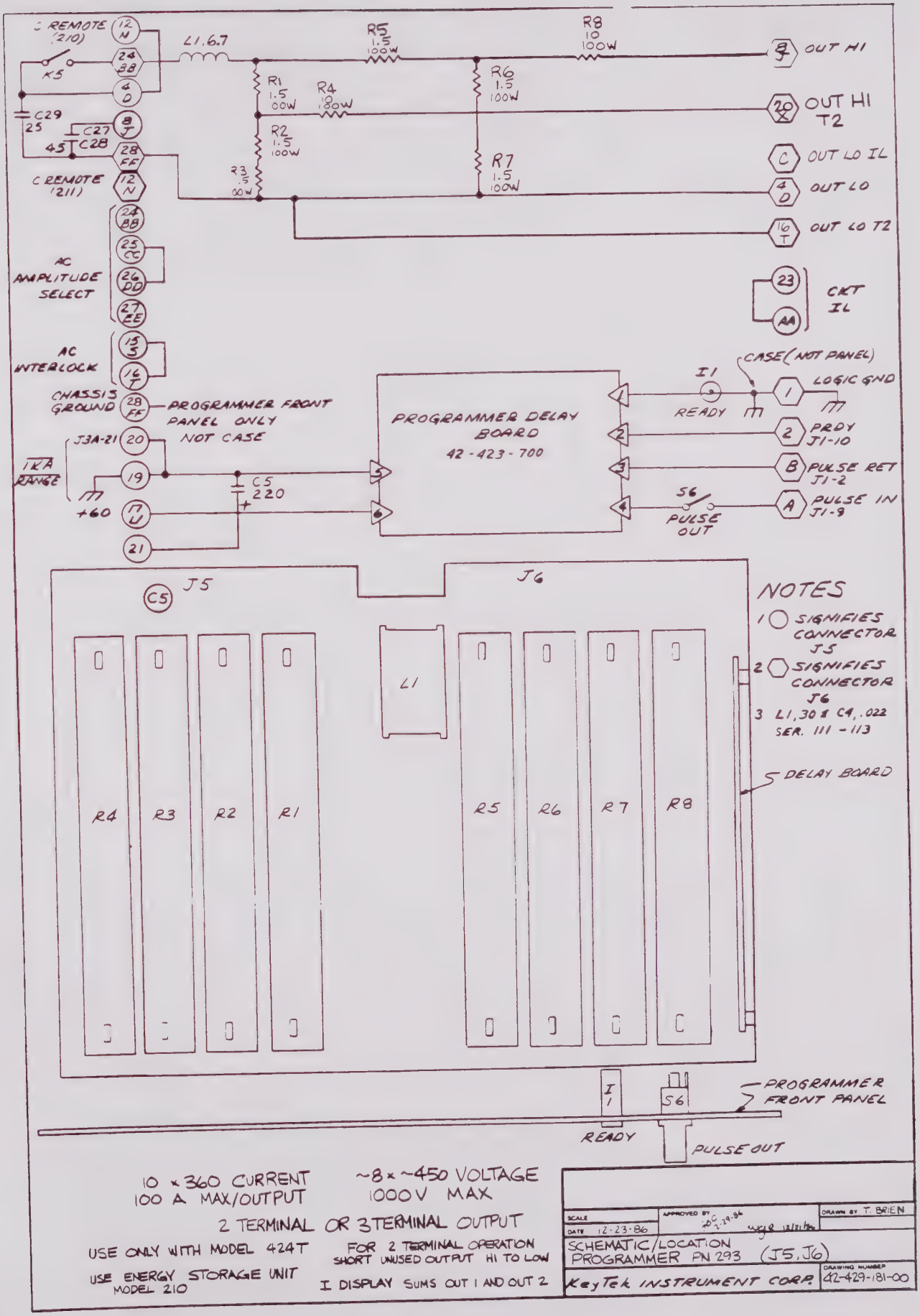
C REMOTE (210)
K5
L1, 6.7
R5 1.5 100W
R8 10 100W
OUT HI
R1 1.5 100W
R4 10 100W
R6 1.5 100W
OUT HI T2
C29 25
C27 45
C28
R2 1.5 100W
R7 1.5 100W
OUT LO IL
C REMOTE (211)
R3 .5 100W
OUT LO
OUT LO T2
AC AMPLITUDE SELECT
CKT IL
AC INTERLOCK
CASE (NOT PANEL)
I1
LOGIC GND
CHASSIS GROUND
PROGRAMMER FRONT PANEL ONLY NOT CASE
PROGRAMMER DELAY BOARD 42-423-700
READY
PRDY J1-10
J3A-21
1KA RANGE
C5 220
PULSE RET J1-2
+60
S6
PULSE OUT
PULSE IN J1-9
J5
J6
NOTES
1 SIGNIFIES CONNECTOR J5
2 SIGNIFIES CONNECTOR J6
3 L1, 30 & C4, .022 SER. 111 - 113
L1
DELAY BOARD
R4
R3
R2
R1
R5
R6
R7
R8
PROGRAMMER FRONT PANEL
READY
PULSE OUT
10 x 360 CURRENT
100 A MAX/OUTPUT
~8 x ~450 VOLTAGE
1000V MAX
2 TERMINAL OR 3 TERMINAL OUTPUT
USE ONLY WITH MODEL 424T
FOR 2 TERMINAL OPERATION SHORT UNUSED OUTPUT HI TO LOW
USE ENERGY STORAGE UNIT MODEL 210
I DISPLAY SUMS OUT 1 AND OUT 2
SCALE
DATE 12-23-86
APPROVED BY
DRAWN BY T. BRIEN
SCHEMATIC/LOCATION PROGRAMMER PN 293 (J5, J6)
KeyTek INSTRUMENT CORP.
DRAWING NUMBER 42-429-181-00

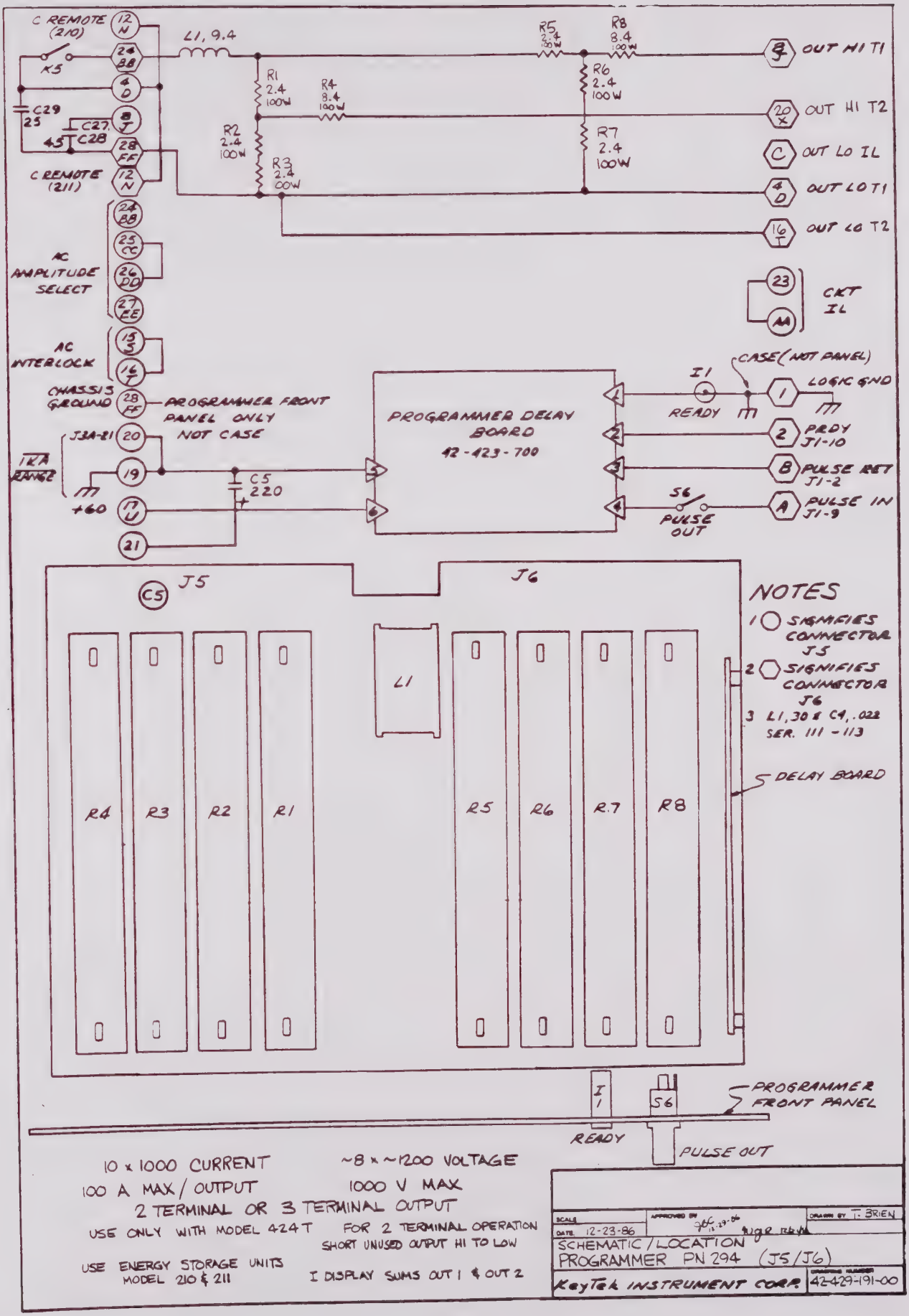
C REMOTE (210)
K5
C29 25
C27 45
C28
C REMOTE (211)
AC AMPLITUDE SELECT
AC INTERLOCK
CHASSIS GROUND
PROGRAMMER FRONT PANEL ONLY NOT CASE
J2A-21
1KA RANGE
+60
L1, 9.4
R1 2.4 100W
R2 2.4 100W
R3 2.4 100W
R4 8.4 100W
R5 8.4 100W
R6 2.4 100W
R7 2.4 100W
R8 8.4 100W
C5 220
OUT HI T1
OUT HI T2
OUT LO IL
OUT LO T1
OUT LO T2
CKT IL
PROGRAMMER DELAY BOARD
42-423-700
I1
READY
CASE (NOT PANEL)
LOGIC GND
PRDY J1-10
PULSE RET J1-2
PULSE IN J1-9
S6
PULSE OUT
J5
J6
C5
L1
R4
R3
R2
R1
R5
R6
R7
R8
DELAY BOARD
PROGRAMMER FRONT PANEL
READY
PULSE OUT
NOTES
1 ○ SIGNIFIES CONNECTOR J5
2 ⬡ SIGNIFIES CONNECTOR J6
3 L1, 30 # C9, .022 SER. 111 - 113
10 x 1000 CURRENT
100 A MAX / OUTPUT
~8 x ~1200 VOLTAGE
1000 V MAX
2 TERMINAL OR 3 TERMINAL OUTPUT
USE ONLY WITH MODEL 424T
FOR 2 TERMINAL OPERATION SHORT UNUSED OUTPUT HI TO LOW
USE ENERGY STORAGE UNITS MODEL 210 & 211
I DISPLAY SUMS OUT 1 & OUT 2
SCALE
DATE 12-23-86
APPROVED BY
DRAWN BY T. BRIEN
SCHEMATIC / LOCATION
PROGRAMMER PN 294 (J5/J6)
KayTek INSTRUMENT CORP.
42429-191-00

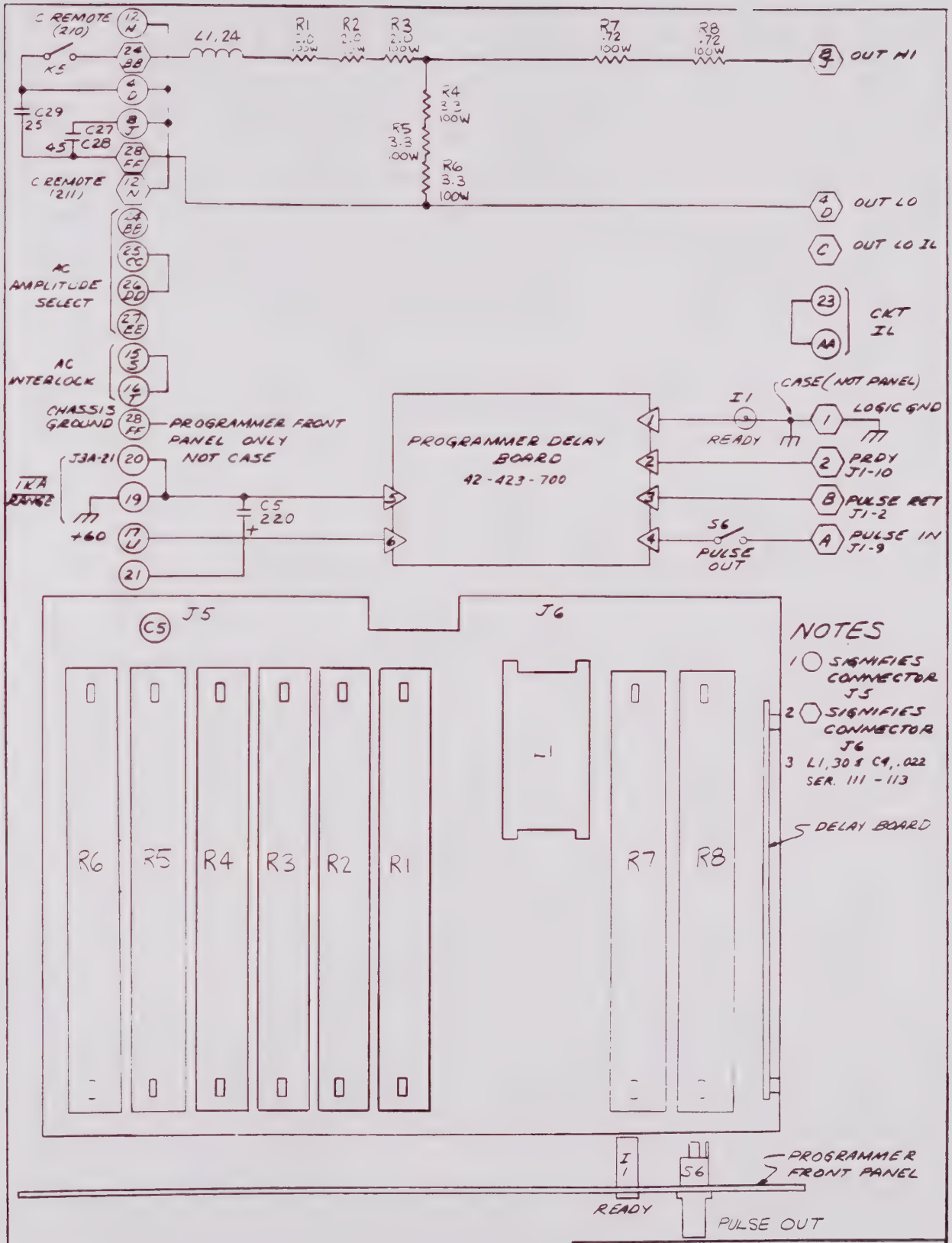
C REMOTE (210)
K5
L1, 24
R1 2.0 100W
R2 2.0 100W
R3 2.0 100W
R4 3.3 100W
R5 3.3 100W
R6 3.3 100W
R7 .72 100W
R8 .72 100W
OUT HI
OUT LO
OUT LO IL
C29 25
C27 45
C28
C REMOTE (211)
AC AMPLITUDE SELECT
AC INTERLOCK
CHASSIS GROUND
PROGRAMMER FRONT PANEL ONLY NOT CASE
J3A-21
1KA RANGE
+60
C5 220
PROGRAMMER DELAY BOARD 42-423-700
CKT IL
CASE (NOT PANEL)
I1
READY
LOGIC GND
PRDY J1-10
PULSE RET J1-2
PULSE IN J1-9
S6
PULSE OUT
J5
J6
C5
L1
R1
R2
R3
R4
R5
R6
R7
R8
DELAY BOARD
PROGRAMMER FRONT PANEL
READY
PULSE OUT
NOTES
1 ○ SIGNIFIES CONNECTOR J5
2 ⬡ SIGNIFIES CONNECTOR J6
3 L1, 30 & C9, .022 SER. 111 - 113
10 x 2500 CURRENT
200 A MAX
~4 x ~6000 VOLTAGE
1000 V MAX
USE ENERGY STORAGE UNITS MODEL 210 & 211
DATE 2-23-86
DRAWN BY T. KIEN
SCHEMATIC/LOCATION PROGRAMMER PN 295 (J5/J6)
KayTek INSTRUMENT CORP.
42-429-201-00

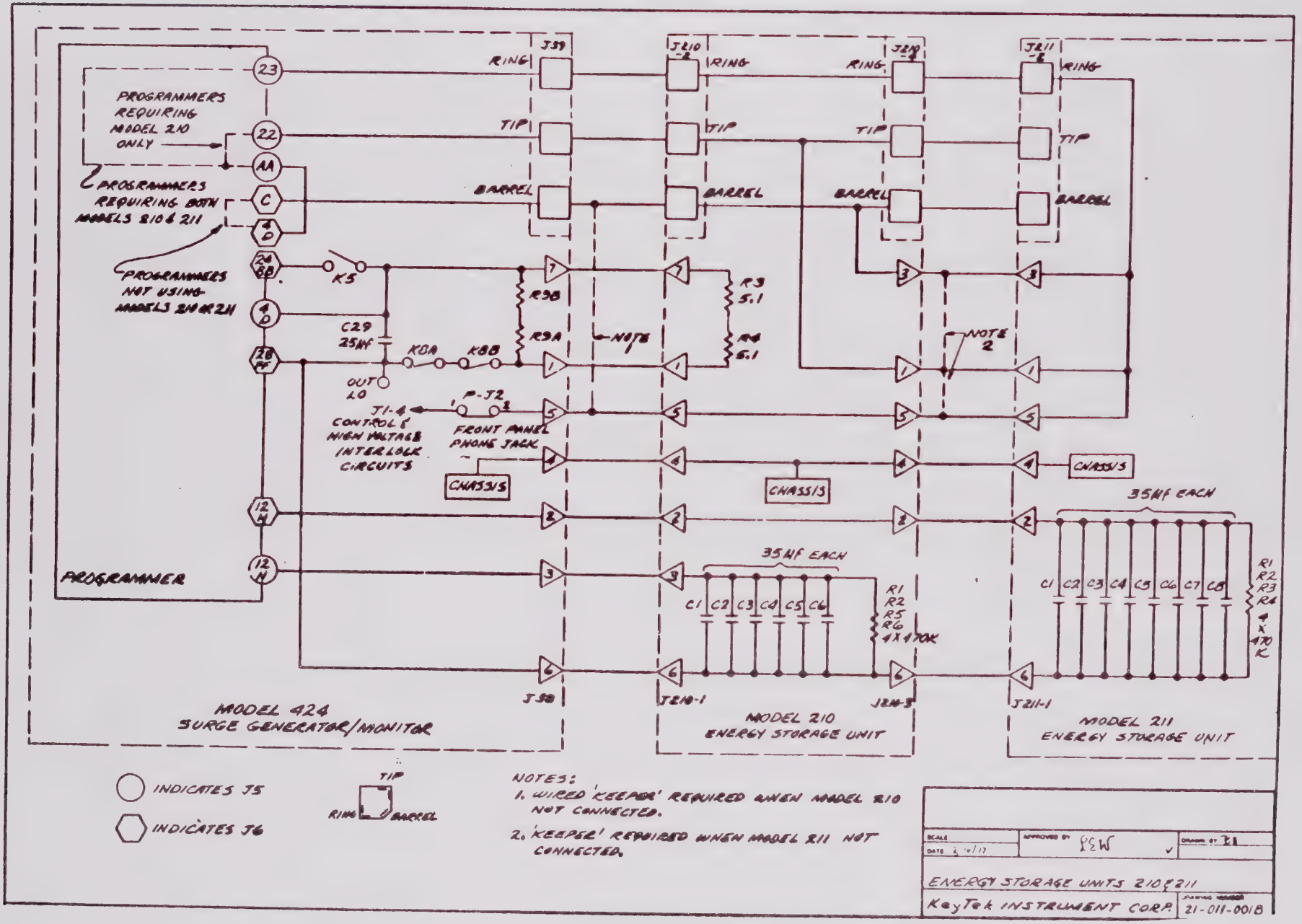
PROGRAMMERS REQUIRING MODEL 210 ONLY
PROGRAMMERS REQUIRING BOTH MODELS 210 & 211
PROGRAMMERS NOT USING MODELS 210 OR 211
PROGRAMMER
RING
TIP
BARREL
J39
J210-2
J210-4
J211-2
K5
C29 25MF
K8A
K8B
OUT LO
R9B
R9A
NOTE 1
R3 5.1
R4 5.1
NOTE 2
J1-4 CONTROL & HIGH VOLTAGE INTERLOCK CIRCUITS
P-J2
FRONT PANEL PHONE JACK
CHASSIS
35MF EACH
C1 C2 C3 C4 C5 C6
R1 R2 R5 R6 4X470K
C1 C2 C3 C4 C5 C6 C7 C8
R1 R2 R3 R4 4 X 470 K
J38
J210-1
J210-3
J211-1
MODEL 424 SURGE GENERATOR/MONITOR
MODEL 210 ENERGY STORAGE UNIT
MODEL 211 ENERGY STORAGE UNIT
INDICATES J5
INDICATES J6
TIP
RING
BARREL
NOTES:
1. WIRED 'KEEPER' REQUIRED WHEN MODEL 210 NOT CONNECTED.
2. 'KEEPER' REQUIRED WHEN MODEL 211 NOT CONNECTED.
SCALE
DATE
APPROVED BY
DRAWN BY
ENERGY STORAGE UNITS 210 & 211
KeyTek INSTRUMENT CORP.
21-011-0018

Pages 8-132 through 8-149 omitted intentionally.

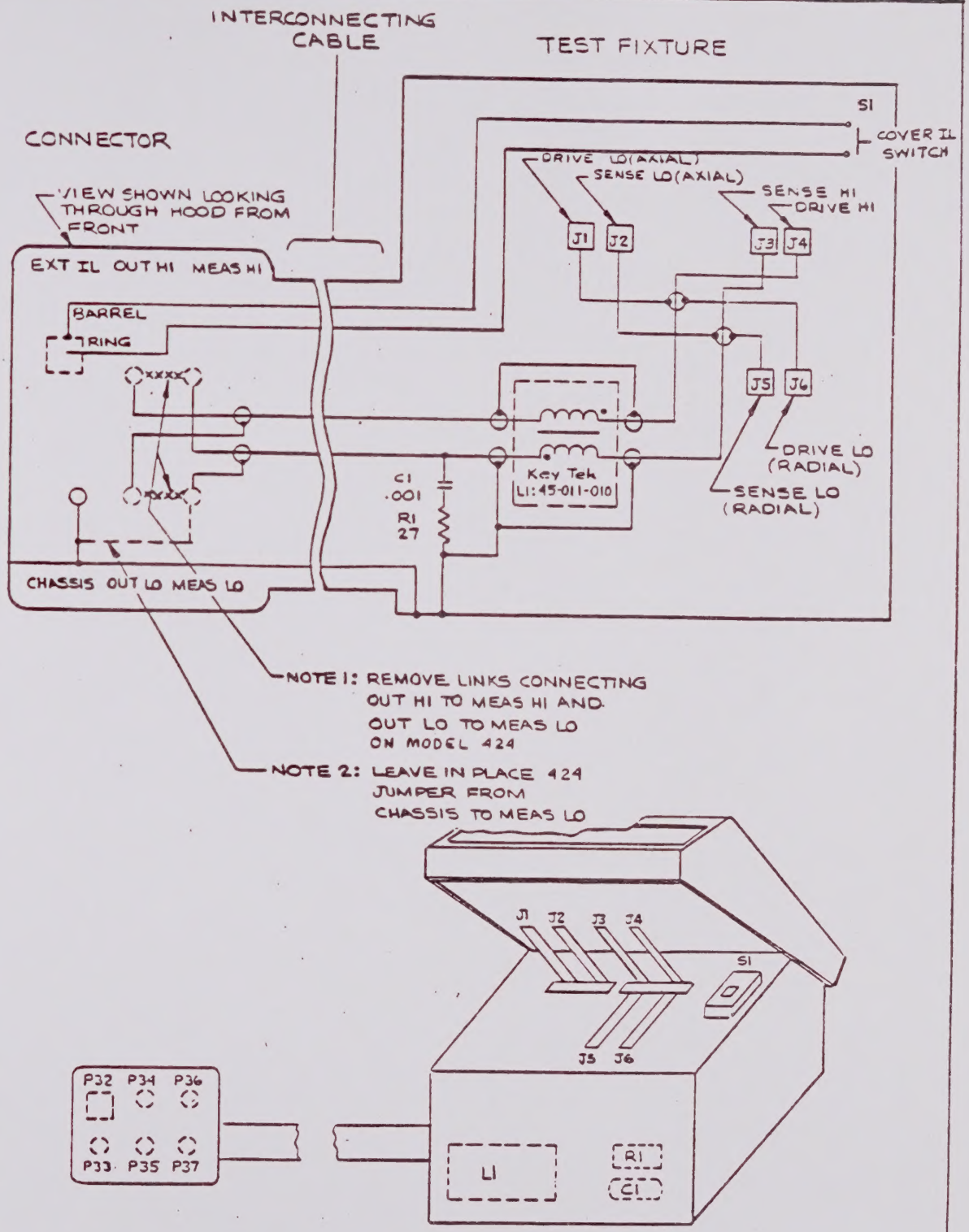


| | |
|---|---|
| NONE | APPROVED BY PSW |
| DATE 2-24-79 | DRAWN BY |
| SCHEMATIC / LOCATION TEST FIXTURE MODEL 450 | |
| Key Tek INSTRUMENT CORP | 45-011-000 |

Office Products ™
Brea, California 92821
Durable Slant Ring
View Binder
VS11-26

MP MASTER
MA32986